PARTS MANUAL

2022

2720 HARVESTER WHEEL

12 ROW 22

8 ROW 30

2800 7th Avenue North
Fargo, ND 58102

Phone: (701) 232-4199
Fax: (701) 234-1716
www.amitytech.com

MANUAL PART NO: 300260

RELEASE DATE: 07/2022
DESIGNED AND MANUFACTURED IN USA

TABLE OF CONTENTS

HITCH ASSEMBLY.....1-4
LIFTER STRUT..... 5-12
HYDRAULIC ROW FINDER..... 13-16
GUARDS & SHIELDS.....17-24
APRON SHAFT..... 25-30
PADDLE SHAFT.....31-34
CLEANING ROLLS.....35-38
CLEANING ROLL MOUNTING PACKAGE..... 39-42
MAIN DRIVE.....43-44
MAIN DRIVE-SIDE COMPONENTS.....45-46
CLEANING ROLL DRIVE..... 47-48
JUMP CHAIN..... 49-50
WHEEL JUMP CHAIN DRIVE..... 51-52
TANK ASSEMBLY..... 53-54
ELEVATOR ASSEMBLY..... 55-56
ELEVATOR BOOM..... 57-60
WHEEL ASSEMBLY..... 61-62
WHEEL CONVEYOR..... 63-66
WHEEL DRIVE..... 67-68
FRAME EXTENSION..... 69-72
REAR WHEEL FRAME ASSEMBLY.....73-74
AXLE COMPONENTS.....75-76
AXLE- TRACK FITUP.....77-78
STEERABLE STRUT ASSEMBLY.....79-80
STEERING INDICATIOR ASSEMBLY..... 81-82
SPINDLE & HUB ASSEMBLY.....83-84
LIGHT KIT.....85-86
ACTIVE DEPTH CONTROL (ADC) ELECTRONICS.....87-88
ADC ELECTRICAL SCHEMATIC.....89-90
KT-JOYSTICK WITH MOUNT #303448.....91-92
ADC WANDS.....93-94
ADC HYDRAULIC COMPONENTS.....95-96
ADC HYDRAULIC COMMON.....97-98
ADC HYDRAULICS.....99-100
VALVE-ADC 3 BANK #302261.....101-102
KIT-JD TOUCHSET 2700 STEERING.....103-104
AXLE HYDRAULICS.....105-106
STEERABLE STRUT HYDRAULICS.....107-108
HITCH & ROW FINDER HYDRAULICS.....109-114
4-BANK VALVE.....115-116
3-BANK VALVE.....117-118
VALVE GROUP 119-120
TANK HYDRAULICS.....121-122
WHEEL HYDRAULICS.....123-124

TABLE OF CONTENTS CONTINUED

HYDRAULIC TANK.....125-126
HARVESTER STAND (OPTIONAL).....127-128
PTO DRIVELINE 1.75" – 20 SPLINE #301558.....129-130
GEARBOX (1.82:1) #300142 4-WAY.....131-132
SELECTOR VALVE #58470.....133-134
ROW FINDER VALVE #301150.....135-136
SPROCKET #54824.....137-138
BELT TIGHTENER #72749.....137-138
BELT TIGHTENER #72058 & #72753..... 139-140
SLIP CLUTCH/SPROCKET #72030.....141-142
SLIP CLUTCH/SPROCKET #58335.....141-142
SLIP CLUTCH/SPROCKET #57993.....141-142
IDLER PULLEY #56406.....143-144
SPROCKET IDLER #56851.....143-144
REVERSE PULLEY #301821.....145-146
ROLLER.....147-148
BELT LAP JOINT.....149
3 BELT LAP JOINT.....150
TOOL CUTTER.....151
DECALS.....152-158
HYDRAULIC LABEL ASSY.....159-160

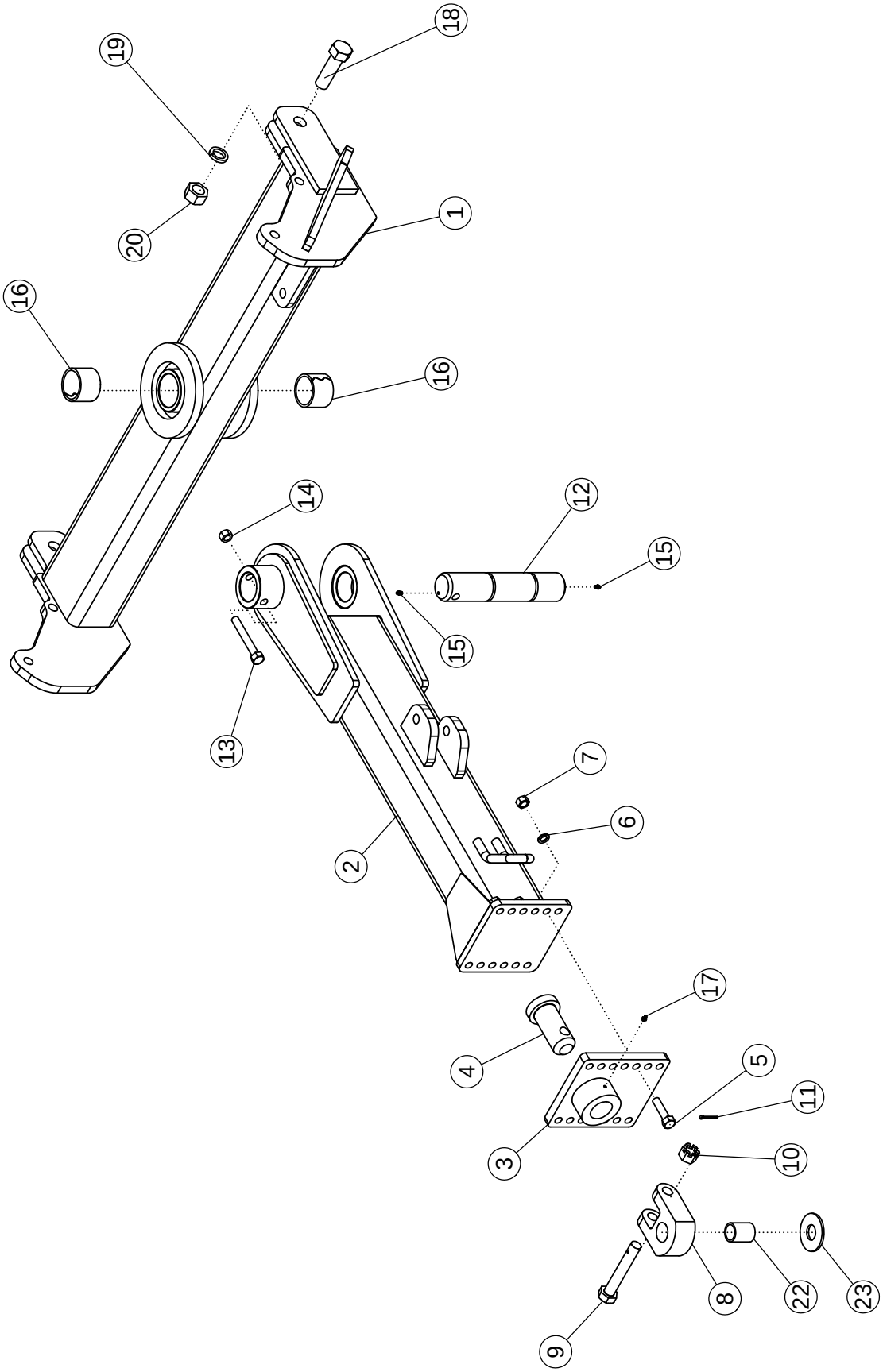
19
18
20
1
16
16
14
12
15
15
13
7
6
2
17
4
5
11
3
10
8
22
23
9

HITCH ASSEMBLY

ITEM	PART NO.	DESCRIPTION	QTY
1	301656	WLDMT - HITCH PIVOT 12R EXTENDED 10"	1
2	301582	WLDMT - DRAWPOLE EXTENDED	1
3	57930	WLDMT-HITCH PLATE	1
4	62101	WLDMT-PIN	1
5	1012059	BOLT-HEX: .75 X 3.00 NC GR5 ZP	6
6	1012061	WASHER-LOCK: .75 ZP	6
7	1011620	NUT-HEX: .75 NC	6
8	64476	PLATE-PULL HITCH	1
9	62477	BOLT-HITCH DRILLED	1
10	62088	NUT-SLOTTED: 1.13 NC GR5 ZP	1
11	1013473	PIN-COTTER: .19 X 2.00 NP	1
12	301590	PIN-HITCH PIVOT	1
13	69911	BOLT-HEX: .75 X 5.5 NC GR5 ZP	1
14	1017000	NUT-TOPLOCK: .75 NC GR5 ZP	1
15	1030883	ZERK-GREASE: .3125 UNF STRAIGHT	2
16	301591	SPRING BUSHING 3.50 X 3.00 X 2.50	2
17	1011748	ZERK - GREASE: .25 UNF STRAIGHT	1
18	72021	BOLT-HEX: 1.38 X 4.50 NC GR5 ZP	2
19	1030760	WASHER-LOCK: 1.38 ZP	2
20	1030758	NUT-HEX: 1.38 NC ZP	2
21	69256	CHAIN-SAFETY 41000# (NOT SHOWN)	1
22	64614	SLEEVE 1.63 (OPTIONAL TO FIT TRACTOR)	1
23	58925	WASHER-HARDENED 4.000 X 1.63	1
	68645	WASHER-FLAT: 2.00 ZP GR8	

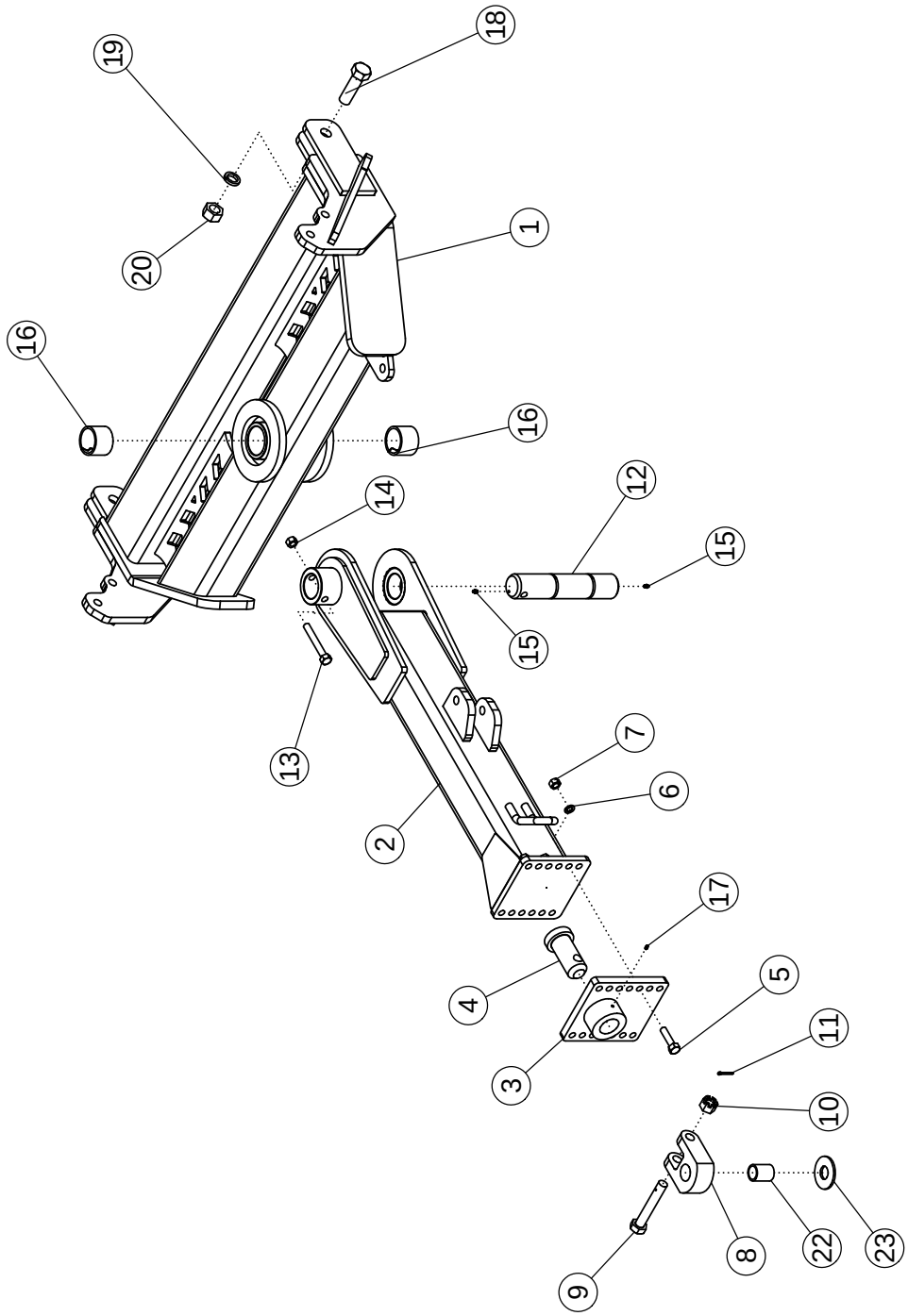
19
20
16
18
1
16
14
12
15
15
13
7
6
2
17
4
5
3
11
10
9
8
22
23

XL HITCH ASSEMBLY

ITEM	PART NO.	DESCRIPTION	QTY
1	301589	WLDMT - HITCH PIVOT 12R EXTENDED	1
2	301582	WLDMT - DRAWPOLE EXTENDED	1
3	57930	WLDMT-HITCH PLATE	1
4	62101	WLDMT-PIN	1
5	1012059	BOLT-HEX: .75 X 3.00 NC GR5 ZP	6
6	1012061	WASHER-LOCK: .75 ZP	6
7	1011620	NUT-HEX: .75 NC	6
8	64476	PLATE-PULL HITCH	1
9	62477	BOLT-HITCH DRILLED	1
10	62088	NUT-SLOTTED: 1.13 NC GR5 ZP	1
11	1013473	PIN-COTTER: .19 X 2.00 NP	1
12	301590	PIN-HITCH PIVOT	1
13	69911	BOLT-HEX: .75 X 5.5 NC GR5 ZP	1
14	1017000	NUT-TOPLOCK: .75 NC GR5 ZP	1
15	1030883	ZERK-GREASE: .3125 UNF STRAIGHT	2
16	301591	SPRING BUSHING 3.50 X 3.00 X 2.50	2
17	1011748	ZERK - GREASE: .25 UNF STRAIGHT	1
18	72021	BOLT-HEX: 1.38 X 4.50 NC GR5 ZP	2
19	1030760	WASHER-LOCK: 1.38 ZP	2
20	1030758	NUT-HEX: 1.38 NC ZP	2
21	69256	CHAIN-SAFETY 41000# (NOT SHOWN)	1
22	64614	TUBE-SPACER 2.0 X 1.63	1
23	58925	WASHER-HARDENED 4.00 X 1.625	1
	68645	WASHER-FLAT: SPCL 2.125 X 4.50 X .184	

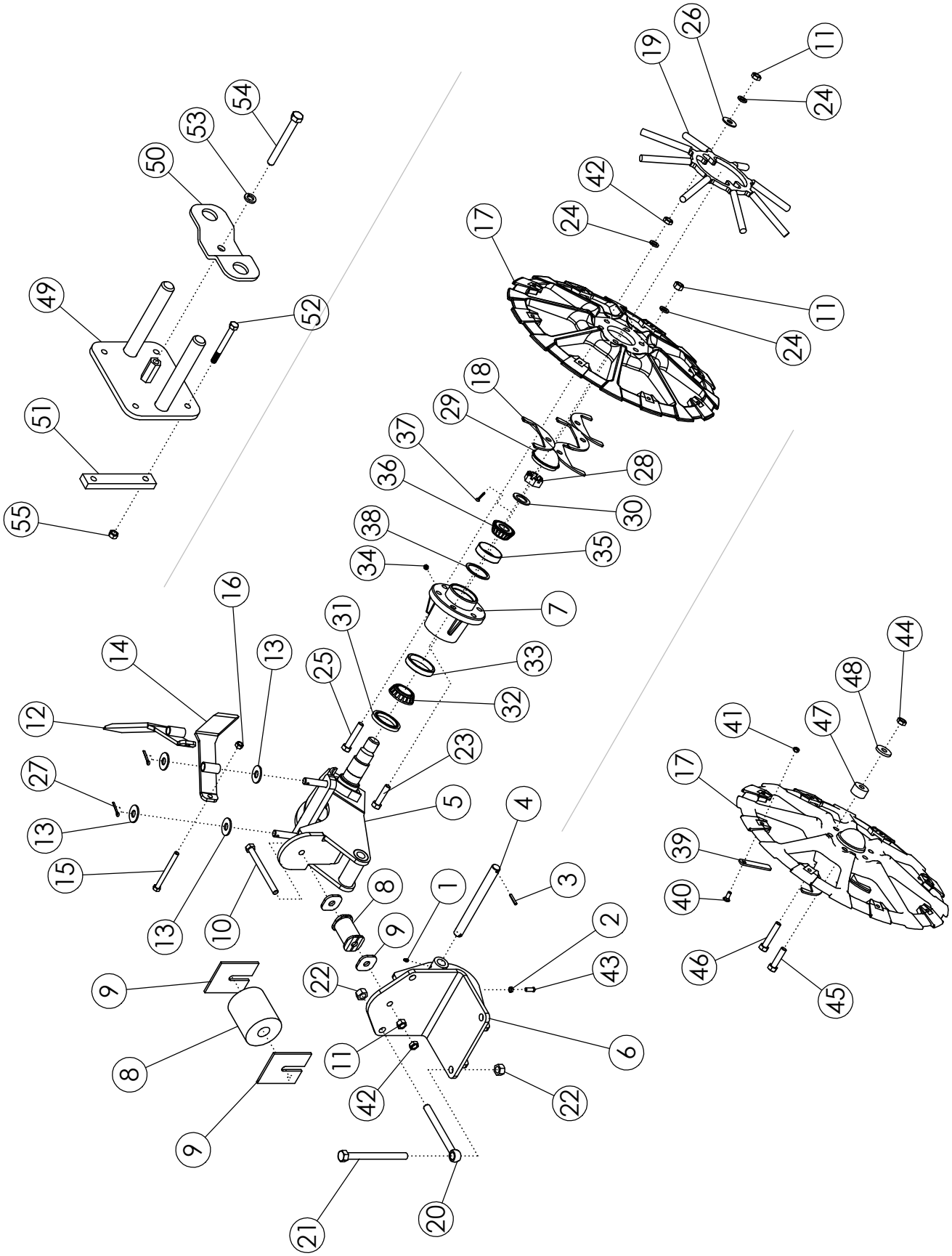
54
53
50
49
52
51
55
16
14
13
12
27
13
15
13
10
9
8
9
25
31
23
5
8
9
22
11
42
21
20
22
6
1
2
43
3
4
7
34
38
35
33
32
36
37
29
18
28
30
17
24
42
24
11
19
26
11
24
44
48
47
41
17
39
40
46
45

LIFTER STRUT

ITEM	PART NO.	DESCRIPTION	QTY
1	1011748	ZERK - GREASE: .25 UNF	2
2	1013519	NUT-JAM: .38 NC GR2 ZP	2
3	59398	PIN-ROLL: .25 X 1.50 ZP	2
4	69907	SHAFT-STRUT	1
5	50142	WLDMT-STRUT SPINDLE ASSY	1
6	50146	WLDMT-STRUT BRACKET	1
7	63655	HUB-MACHINED	2
8	50134	WLDMT-SPACER ZP	1
	51542	BUMPER-RUBBER	1
9	50137	WASHER SQUARE ZP	2
	50139	PLATE-LIFTER STRUT SPACER ZP	4
10	1030761	BOLT-HEX: .63 X 7.00 NC GR 8 ZP	1
11	1011578	NUT-HEX: .63 NC GR5 ZP	13
12	50715	WLDMT-SCRAPER RH	1
13	1030702	WASHER-FLAT: .75 ZP	4
14	50716	WLDMT-SCRAPER LH	1
15	1011669	BOLT-HEX: .50 X 6.00 NC GR5 ZP	1
16	1027461	NUT-TOPLOCK: .50 NC GR5 ZP	1
17	69855	LIFTER WHEEL MACHINED	2
	300734	LIFTER WHEEL HARD PAINTED	
18	50747	PLATE-LIFTER WHEEL SPACER ZP	AR
19	63880	WLDMT-WHEEL FILLER (OPTIONAL)	2
20	64135	BOLT-EYE: .75 X 8.00 ZP	2
21	64136	BOLT-HEX: .75 X 8.50 NC GR5 ZP	2
22	1017000	NUT-TOPLOCK: .75 NC GR5 ZP	4
23	1013023	BOLT-HEX: .63 X 2.50 NC GR5 ZP	8
24	1011813	WASHER-LOCK: .63 ZP	16
25	65825	BOLT-HEX: .63 X 3.25 NC GR5 ZP	4
26	1013024	WASHER-FLAT: .63 ZP	4
27	1013473	PIN-COTTER: .19 X 2.00 NP	2
28	1016367	NUT-SPINDLE: 1.38 NF NP	2
29	63624	HUB CAP ROUNDED ZP	2
30	1030765	BUSHING-MACHINED: 1.38 NR 10 GA	2
31	53632	SEAL	2
32	53634	CONE-BEARING INNER	2
33	53636	CUP-BEARING INNER	2
34	1030766	ZERK - GREASE .13 NPT STRAIGHT	2
35	53635	CUP-BEARING OUTER	2
36	53633	CONE-BEARING OUTER	2
37	64012	PIN-COTTER: .19 X 3.00 NP	2

CONTINUE

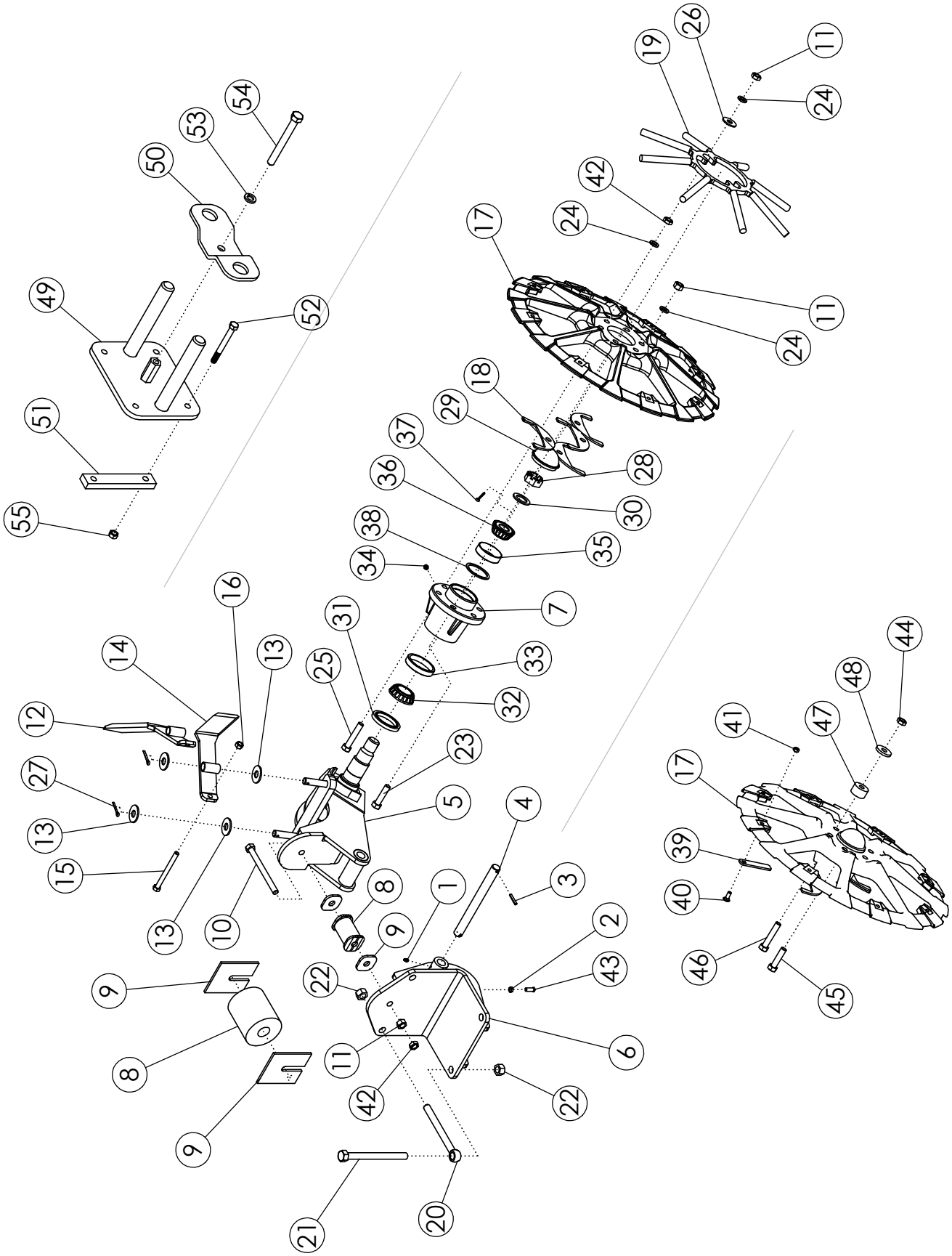
55
51
49
50
53
54
52
12
14
16
13
27
13
15
13
10
9
8
9
8
9
22
11
42
21
20
22
6
43
2
1
3
4
5
23
25
31
32
33
7
34
38
35
36
30
37
28
29
18
17
24
42
24
11
19
26
24
11
17
41
47
48
44
39
40
46
45

LIFTER STRUT (CONTINUED)				
ITEM	**PART NO.**	**DESCRIPTION**	**QTY**	
38	64674	RACE-SPACER (.120)	AR	
39	300097	PLATE-LIFTER WHEEL FILLER	16	
40	59488	BOLT-CRG: .38 X 1.00 NC GR5 ZP	16	
41	1016999	NUT-TOPLOCK: .38 NC GR5 ZP	16	
42	1026259	NUT-JAM: .63 NC GR2 ZP	5	
43	50813	SCREW-SET: SQ HD .38 X 1.00 ZP	2	
		OPTIONAL URETHANE BUSHING		
44	1016595	NUT-TOPLOCK: .63 GR5 ZP	12	
45	59093	BOLT-HEX: .63 X 3.75 NC GR5 ZP	8	
46	1013935	BOLT-HEX: .63 X 4.50 NC GR5 ZP	4	
47	51705	BUSHING	12	
	301975	BUSHING-URETHANE .67"		
48	301324	WASHER-CUSTOM: .668 ID X 1.875 OD X .235 TH	12	
		OPTIONAL WHEEL FILLER BRACKET	6-8ROW	12 ROW
49	64658	WLDMT-WHEEL FILLER BRACKET	2	3
50	64659	PLATE-RETAINER	2	3
51	63372	BAR-BACKING	4	6
52	58176	BOLT-HEX: .38 X 3.50 NC GR5 ZP	8	12
53	1011581	WASHER-LOCK: .50 ZP	2	3
54	1011618	BOLT-HEX: .50 X 5.00 NC GR5 ZP	2	3
	1013682*	BOLT-HEX: .50 X 4.50 NC GR5 ZP	2	-
55	1016999	NUT-TOPLOCK: .38 NC GR5 ZP	8	12

* 6 ROW ONLY

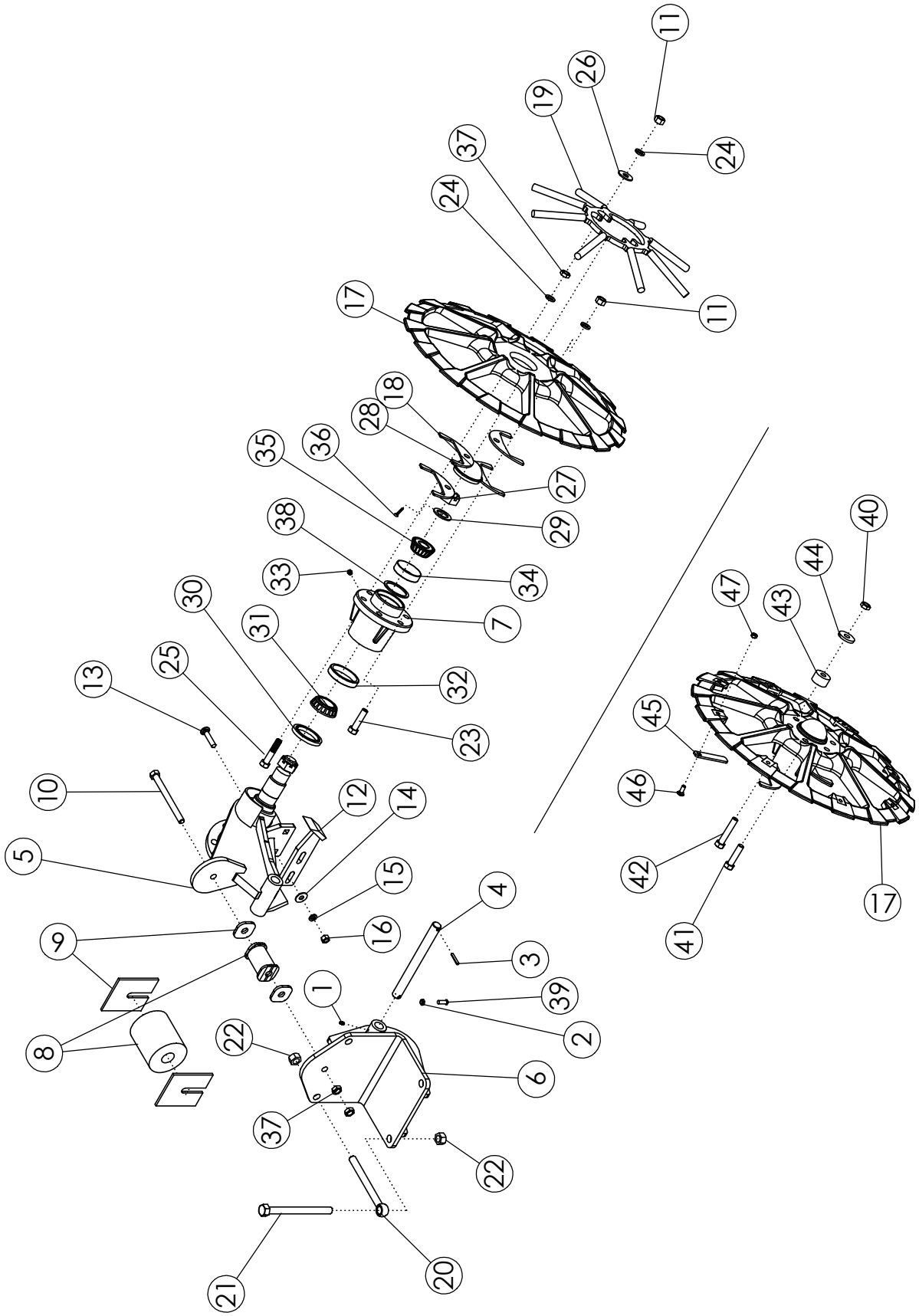
11
26
19
24
37
24
17
11
18
28
35
36
27
29
38
40
33
34
44
30
7
47
43
31
32
25
13
45
23
10
12
14
46
5
15
42
4
16
17
9
3
41
39
1
2
8
22
6
37
22
21
20

LIFTER STRUT - BOTTOM SCRAPER OPTION

ITEM	PART NO.	DESCRIPTION	QTY
1	1011748	ZERK - GREASE: .25 UNF	2
2	1013519	NUT-JAM: .38 NC GR2 ZP	2
3	59398	PIN-ROLL: .25 X 1.50 ZP	2
4	69907	SHAFT-STRUT	1
5	68095	WLDMT-SP LIFTER STRUT STD	1
6	50146	WLDMT-STRUT BRACKET	1
7	63655	HUB-MACHINED	2
8	50134	WLDMT-SPACER ZP	1
	51542	BUMPER-RUBBER	1
9	50137	WASHER SQUARE ZP	2
	50139	PLATE ZP	4
10	1030761	BOLT-HEX: .63 X 7.00 NC GR 8 ZP	1
11	1011578	NUT-HEX: .63 NC GR5 ZP	13
12	64369	WLDMT-SCRAPER	2
13	64685	BOLT-CRG: .50 X 2.25 NC GR5 ZP	2
14	1014443	WASHER-FLAT: .50 ZP	2
15	1011581	WASHER-LOCK: .50 ZP	2
16	1011577	NUT-HEX: .50 NC GR5 ZP	2
17	69855	LIFTER WHEEL MACHINED	2
	300734	LIFTER WHEEL HARD PAINTED	
18	50747	PLATE-LIFTER WHEEL SPACER ZP	AR
19	63880	WLDMT-WHEEL FILLER (OPTIONAL)	2
20	64135	BOLT-EYE: .75 X 8.00 ZP	2
21	64136	BOLT-HEX: .75 X 8.50 NC GR5 ZP	2
22	1017000	NUT-TOPLOCK: .75 NC GR5 ZP	4
23	1013023	BOLT-HEX: .63 X 2.50 NC GR5 ZP	8
24	1011813	WASHER-LOCK: .63 ZP	16
25	65825	BOLT-HEX: .63 X 3.25 NC GR5 ZP	4
26	1013024	WASHER-FLAT: .63 ZP	4
27	1016367	NUT-SPINDLE: 1.38 NF NP	2
28	63624	HUB CAP ROUNDED ZP	2
29	1030765	BUSHING-MACHINED: 1.38 NR 10 GA	2
30	53632	SEAL	2
31	53634	CONE-BEARING INNER	2
32	53636	CUP-BEARING INNER	2
33	1030766	ZERK - GREASE .13 NPT STRAIGHT	2
34	53635	CUP-BEARING OUTER	2
35	53633	CONE-BEARING OUTER	2
36	64012	PIN-COTTER: .19 X 3.00 NP	2
37	1026259	NUT-JAM: .63 NC ZP	5
38	64674	RACE-SPACER (.120)	AR
39	50813	SCREW-SET: SQ HD .38 X 1.00 ZP	2

CONTINUE

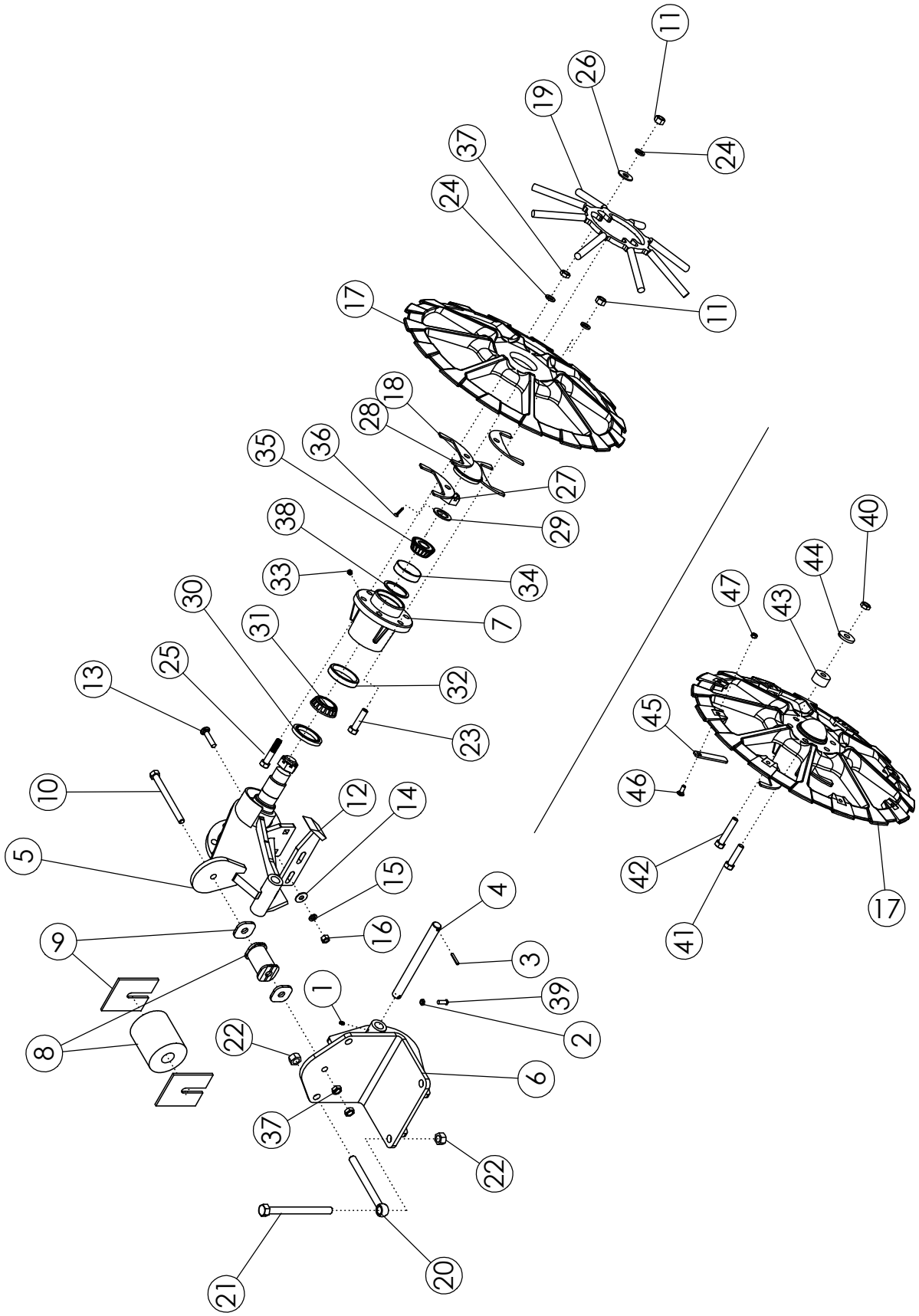
11
26
19
24
37
24
17
11
18
28
35
36
27
29
38
40
33
34
44
47
43
30
7
31
32
25
13
23
45
10
12
14
46
5
15
42
4
16
17
9
3
41
39
1
2
8
22
6
37
22
21
20

LIFTER STRUT - BOTTOM SCRAPER (CONTINUED)			
ITEM	**PART NO.**	**DESCRIPTION**	**QTY**
		OPTIONAL URETHANE BUSHING	
40	1016595	NUT-TOPLOCK: .63 GR5 ZP	12
41	59093	BOLT-HEX: .63 X 3.75 NC GR5 ZP	8
42	1013935	BOLT-HEX: .63 X 4.50 NC GR5 ZP	4
43	51705	BUSHING	12
	301975	BUSHING-URETHANE .67"	
44	301324	WASHER-CUSTOM: .668 ID X 1.875 OD X .235 TH	12
		RIM FILLER KIT	
45	300097	PLATE-LIFTER WHEEL FILLER	16
46	59488	BOLT-CRG: .38 X 1.00 NC GR5 ZP	16
47	1016999	NUT-TOPLOCK: .38 NC GR5 ZP	16

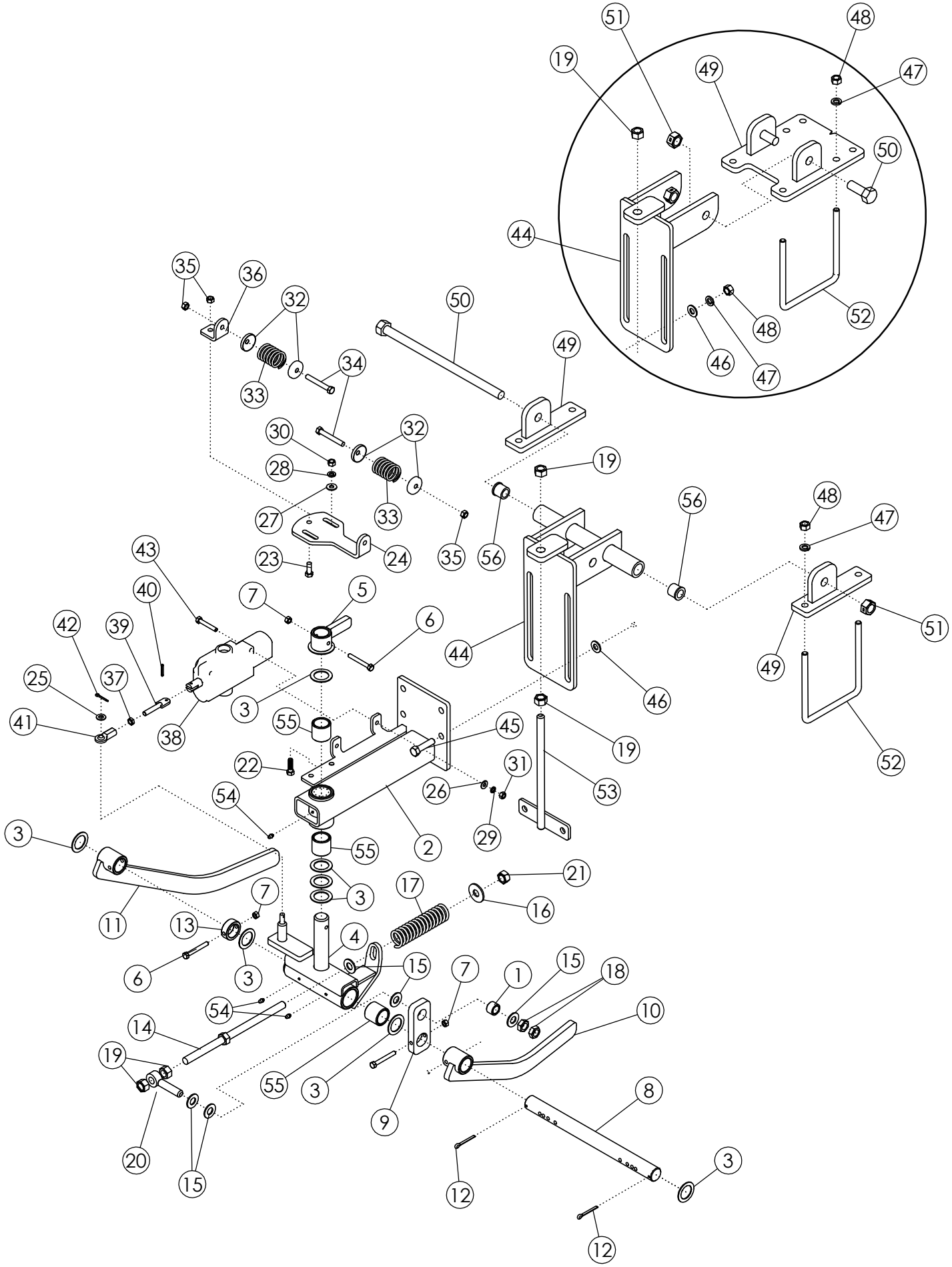
51
48
19
49
47
50
44
52
46
47
35
36
32
50
48
49
34
33
30
32
19
28
56
48
27
33
47
43
23
24
35
56
40
7
5
51
42
39
6
44
49
25
37
46
3
41
38
55
45
19
22
31
52
26
53
54
29
3
55
2
21
3
17
7
16
11
13
4
6
3
15
7
1
15
18
54
10
14
19
55
3
8
9
20
15
12
3
12

HYDRUALIC ROW FINDER

ITEM	PART NO.	DESCRIPTION	QTY
1	52567	BUSHING-ZP	1
2	62520	ASSY-ROW FINDER MAIN FRAME W/BUSHINGS	1
3	55206	BUSHING-MACH: 1.25 NR 14GA	9
4	51139	ASSY-WLDMT-SWIVEL W/BUSHINGS	1
5	51130	WLDMT-FLIPPER	1
6	301748	BOLT-HEX: .31 X 2.50 NC GR8 ZP	5
7	301749	NUT-TOPLOCK: .31 NC GR8 ZP	5
8	51690	SHAFT ZP	1
9	52566	TENSIONER ARM	1
10	51131	SENSOR ARM-L.H.	1
	301055	WLDMT-SENSOR ARM LH BENT	
11	52564	SENSOR ARM-R.H.	1
	301056	WLDMT-SENSOR ARM RH BENT	
12	1030797	PIN-COTTER: .19 X 1.75 NP	2
13	51137	COLLAR	1
14	52565	ADJUSTMENT BOLT	1
15	1013004	WASHER-FLAT: SAE .63 ZP	5
16	1013024	WASHER-FLAT: .63 ZP	2
17	51692	SPRING: .21 X 1.44 OD X 6.00 15 COILS	1
18	1026259	NUT-JAM: .63 NC GR2 ZP	3
19	1011578	NUT-HEX: .63 NC GR2 ZP	4
20	51691	EYEBOLT: .63 X 3.25 ZP	1
22	1011601	BOLT-HEX: .38 X 1.25 NC GR5 ZP	2
23	1011600	BOLT-HEX: .38 X 1.00 NC GR5 ZP	1
24	51129	PLATE-ADJUSTMENT	4
25	1014608	WASHER-FLT: SAE .38 ZP	1
26	1020416	WASHER-FLAT: .25 ZP	2
27	1011583	WASHER-FLAT: .31 ZP	2
28	1011586	WASHER-LOCK: .38 ZP	2
29	1029115	WASHER-LOCK: .31 ZP	2
30	1011576	NUT-HEX: .38 NC GR2 ZP	2
31	1011575	NUT-HEX: .31 NC GR2 ZP	2
32	52582	SPRING CAP	4
33	51689	SPRING-ROW FINDER PAINTED	2
34	1019828	BOLT-HEX: .38 X 2.75 NC GR5 ZP	2
35	1016999	NUT-TOPLOCK: .38 NC GR5 ZP	7
36	51128	SPRING PLATE	1
37	1030792	NUT-JAM: .38 NF GR2 ZP	1
38	301150	VALVE-ROWFINDER O/C	1
39	301750	WLDMT-STUD RF LONG ZP	1
40	64157	PIN-ROLL: .19 X 1.125 ZP	1

CONTINUED

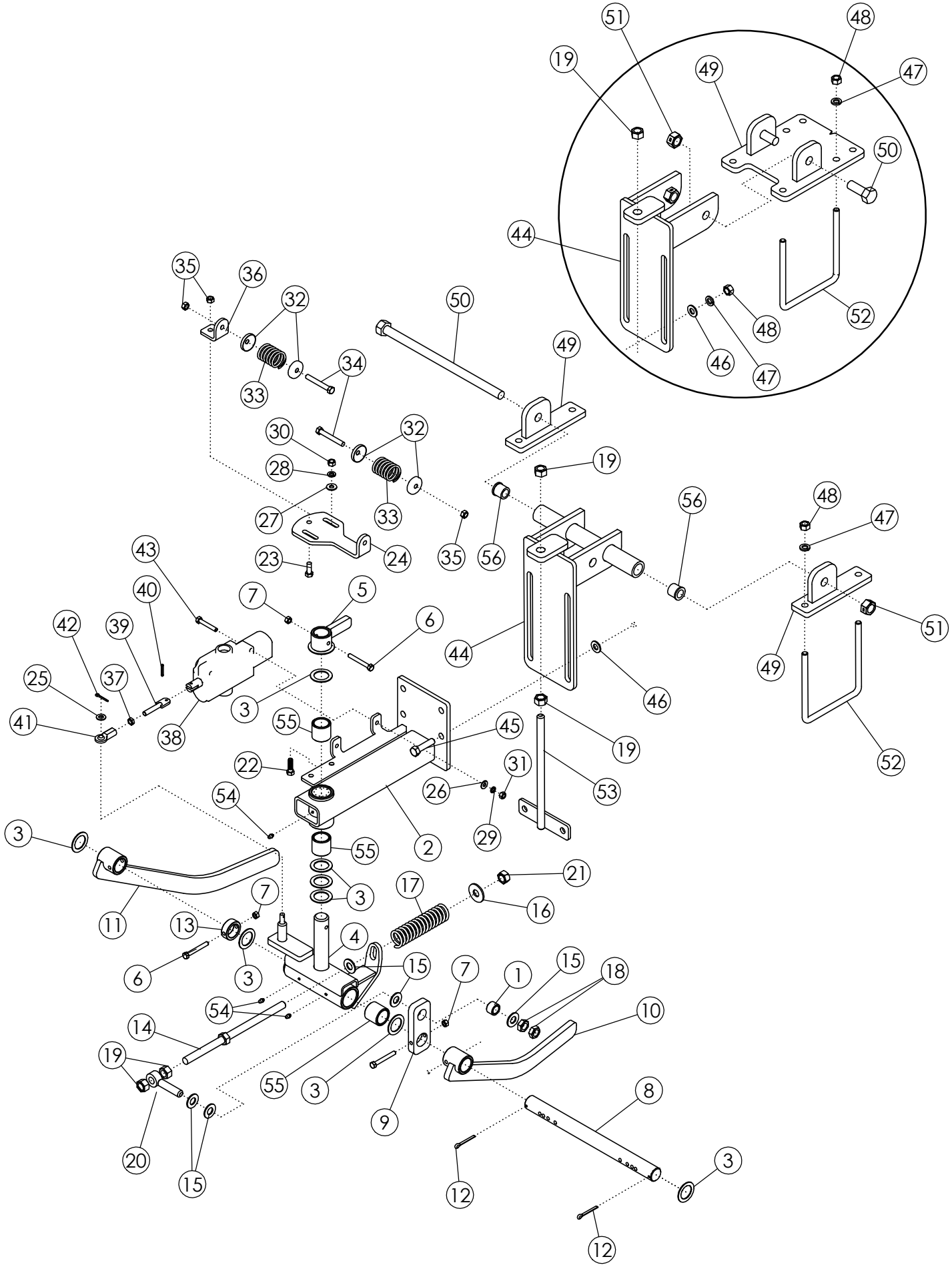
51
48
19
49
47
50
44
52
46
47
35
36
32
50
48
49
34
33
30
32
19
28
56
48
27
33
47
43
23
24
35
56
40
7
5
51
42
39
6
44
49
25
37
46
3
41
38
55
45
19
22
31
52
26
53
54
29
3
55
2
21
3
17
7
16
11
13
4
6
3
15
7
1
15
18
54
10
14
19
55
3
8
9
20
15
12
3
12

HYDRAULIC ROW FINDER (CONTINUED)

ITEM	PART NO.	DESCRIPTION	QTY
41	51136	UNIBALL COUPLING	1
42	1029137	PIN-COTTER: .13 X 1.00 ZP	1
43	1011285	BOLT-HEX: .31 X 2.00 NC	2
44	63661	WLDMT-MOUNTING BRACKET	1
	52181	WLDMT-BRACKET	
45	1011609	BOLT-HEX: .50 X 2.00 NC GR5 ZP	4
46	1011584	WASHER-FLAT: SAE .50 ZP	4
47	1011581	WASHER-LOCK: .50 ZP	8
48	1011577	NUT-HEX: .50 NC GR2 ZP	12
49	63662	WLDMT-MOUNTING SUPPORT	2
	62871	WLDMT-ROW FINDER BRACKET UNIVERSAL	1
50	63664	BOLT-HEX: .75 X 14.00 NC GR5 ZP	1
	1012060	BOLT-HEX: .75 X 2.00 NC GR5 ZP	2
51	1013537	NUT-TOPLOCK: .75 NC GR5 ZP	2
52	53984	U-BOLT: .500 X 7.00 X 6.00 X 7.00	2
	35780	U-BOLT: .500 X 7.50 X 8.00 X 7.50 ZP	
53	62882	WLDMT-TIGHTENER 11.125" ZP	1
54	1011748	ZERK - GREASE	3
55	56939	BUSHING-OILITE:1.25 X 1.625 X 1.50L	4
56	52654	BUSHING	2

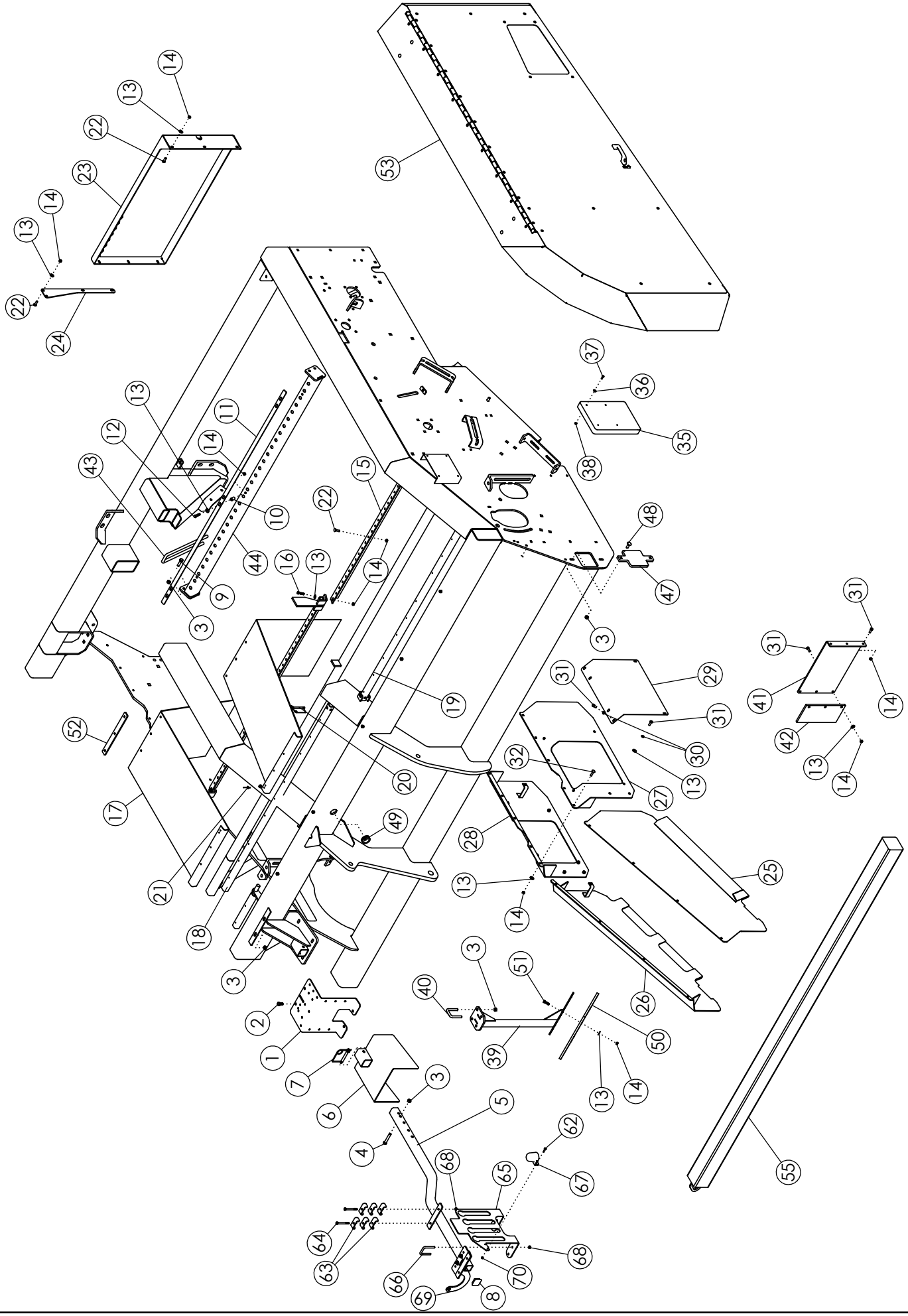
53
14
13
22
23
14
13
22
24
37
36
35
38
13
11
12
14
10
43
15
22
44
9
3
16
13
14
48
47
3
31
31
29
41
14
19
31
31
30
42
13
14
52
20
32
13
27
17
49
28
25
21
13
14
18
3
3
51
40
26
2
1
39
50
7
13
14
6
3
5
4
62
68
65
67
55
64
63
68
66
70
69
8

GUARDS AND SHIELDS FRONT

ITEM	PART NO.	DESCRIPTION	QTY
1	72071	PLATE-HOSE MOUNT	1
2	1011096	BOLT-HEX: .50 X 1.00 NC GR5 ZP	1
3	1027461	NUT-TOPLOCK: .50 NC GR5 ZP	5
4	1011611	BOLT-HEX: .50 x 3.00 NC GR5 ZP	1
5	54800	WLDMT-HOSE SUPPORT	1
6	63354	WLDMT-PTO SHIELD	1
7	52408	SPRING PIN .50 X 3.50	1
8	63869	CAPLUG-2" SQ	1
9	1011608	BOLT-HEX: .50 X 1.75 NC GR5 ZP	1
10	58446	SPACER ZP	1
11	73255	STRAP-ROD HOLDER 12R FRONT	1
12	1011603	BOLT-HEX: .38 X 1.75 NC GR5 ZP	1
13	1011828	WASHER-FLAT .38 ZP	19
14	1016999	NUT-TOPLOCK: .38 NC GR5 ZP	19
15	72074	MOUNT-TARP	4
16	1011602	BOLT-HEX: .38 X 1.50 NC GR5 ZP	8
17	58961	APRON-RUBBER	12
18	72073	TUBE-OUTER APRON MOUNT	2
19	72077	TUBE-OUTER APRON MOUNT	2
20	59101	SPRING PIN .375" X 3.00"	2
21	1011974	RIVET-POP: .19 X .531 ZP	2
22	1016362	BOLT-CRG: .38 X 1.25 NC GR5 ZP	6
23	72873	WLDMT-SHIELD REAR	1
24	72870	PLATE-SHIELD MOUNT	1
25	72783	WLDMT-MIDDLE SHIELD FRONT LEFT	1
26	72784	WLDMT-MIDDLE SHIELD FRONT RH	1
27	73148	WLDMT-MIDDLE SHIELD REAR LH	1
28	73149	WLDMT-MIDDLE SHIELD REAR RH	1
29	73158	SHEET-COVER	1
30	1011586	WASHER-LOCK: .38 ZP	2
31	1011600	BOLT-HEX: .38 X 1.00 NC GR5 ZP	4
32	58679	BOLT-CRG: .38 X 1.50 NC GR5 ZP	1
35	64635	CASE-MANUAL STORAGE	1
36	1020416	WASHER-FLAT: .25 ZP	1
37	1011595	BOLT-HEX: .25 X .75 NC GR5 ZP	1
38	1030946	NUT-TOPLOCK: .25 NC GR5 ZP	1
39	62378	WLDMT - DEFLECTOR	1
38	65278	SPRING-SCRAPER	4
39	1030700	NUT-TOPLOCK: .31 NC GR5 ZP	4

CONTINUED

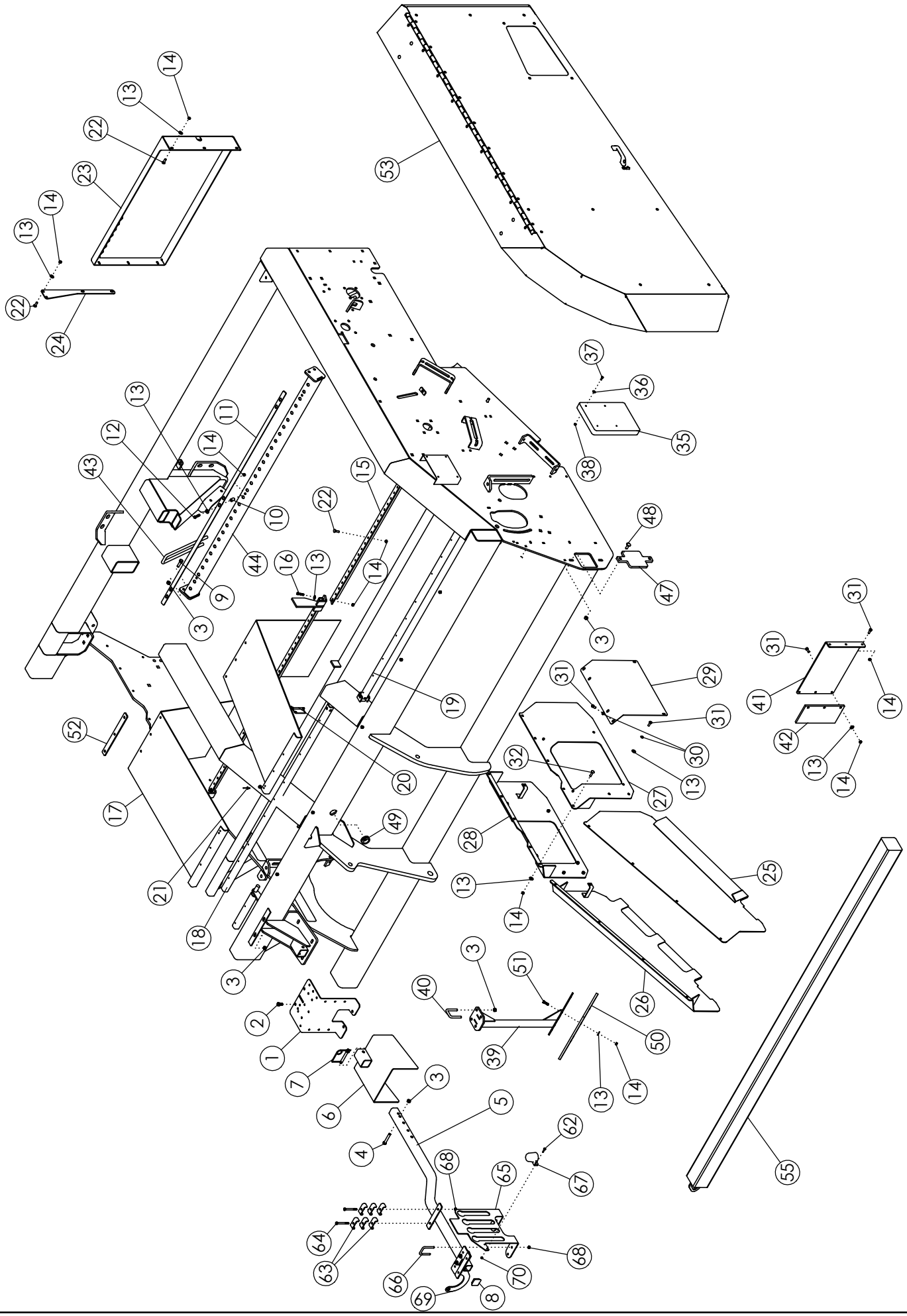
53
14
13
22
23
14
13
22
24
37
36
35
38
13
11
12
14
10
43
15
22
44
9
3
16
13
14
48
47
3
31
31
41
14
29
31
31
30
42
13
14
19
52
20
32
13
27
17
49
28
25
21
13
14
18
3
3
51
40
26
2
1
39
50
7
13
14
6
3
5
4
62
68
65
67
55
64
63
68
66
70
69
8

GUARDS AND SHIELDS FRONT (CONTINUED)			
ITEM	**PART NO.**	**DESCRIPTION**	**QTY**
40	65658	U-BOLT: .50 X 3 X 2.06 X 3	1
41	73235	PLATE-FILLER 18.375" 12R50CM	1
42	51680	DEFLECTOR-RUBBER	1
43	300261	U-ROD: .625 X 17.00 X 1.875 X 17.00 ZP	15
44	73256	WLDMT-FRONT MOUNT 12R SHORT	1
47	301328	PLATE-END CAP	1
48	1023854	BOLT-CRG: .50 X 1.25 NC GR5 ZP	1
49	301025	GROMMET-RUBBER 1.50" ID	1
50	51687	DEFLECTOR-RUBBER	1
51	1011601	BOLT-HEX: .38 X 1.25 NC GR5 ZP	1
52	302247	PLATE-APRON MOUNT	1
53	303360	ASSY-2720 FRONT DOOR LH	1
54	303359	ASSY-2720 FRONT DOOR RH (NOT SHOWN)	1
55	301330	WLDMT-BALLAST WEIGHT KT 20FT	2
62	1013423	BOLT-HEX: .25 X 1.00 NC GR5 ZP	2
63	50714	CLAMP 1/2" ZP	12
64	58176	BOLT-HEX: 0.38 X 3.50 NC GR5 ZP	4
65	301900	PLATE- HYD HOSE END HOLDER XL	1
66	33162	U-BOLT: 0.375 X 3.00 X 2.00 X 3.00	2
67	223329	HOLDER-LIGTH PLUG	1
68	1016999	NUT-TOPLOCK: 0.38 NC GR5 ZP	8
69	303476	KT-PTO STORAGE	1
70	1030946	NUT-TOPLOCK: 0.25 NC GR5 ZP	2

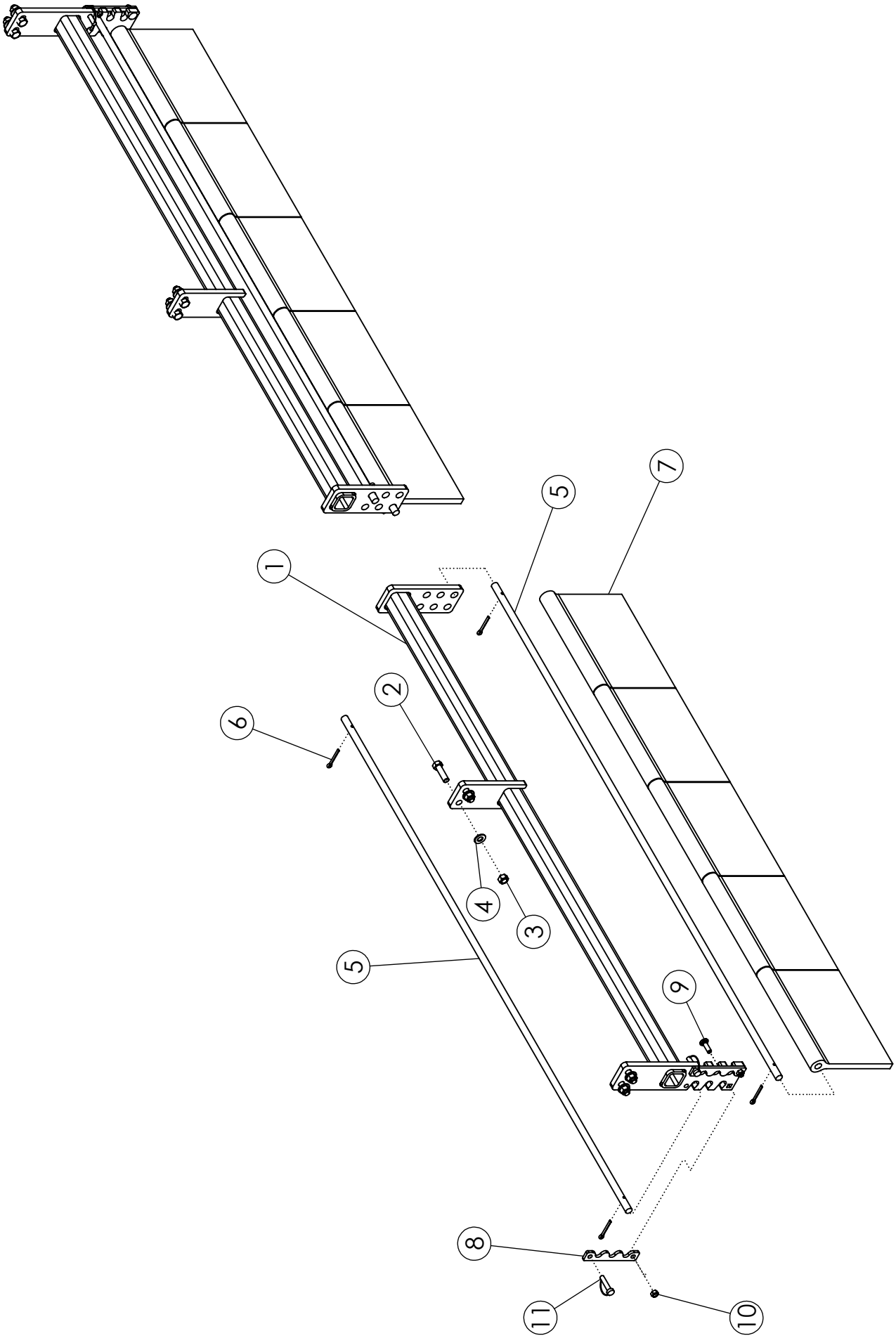
1
2
3
4
5
6
7
8
9
10
11

FRONT CLEANING FLAPS			
ITEM	PART NO.	DESCRIPTION	QTY
1	300232	WLDMT-FRONT CLEANING FLAP	2
2	1011608	BOLT-HEX: .50 X 1.75 NC GR5 ZP	8
3	1027461	NUT-TOPLOCK: .50 NC GR5 ZP	8
4	1011584	WASHER-FLAT: SAE .50 ZP	8
5	300237	SHAFT-FRONT CLEANING FLAP	4
6	1013473	PIN-COTTER: .19 X 2.00 ZP	8
7	64648	FLAP-RUBBER	10
8	300238	PLATE-LOCKING	4
9	1016362	BOLT-CRG: .38 X 1.25 NC GR5 ZP	4
10	1016999	NUT-TOPLOCK: .38 NC GR5 ZP	4
11	66952	PIN-WIRE LOCK: .375 X 2.00 ZP	4

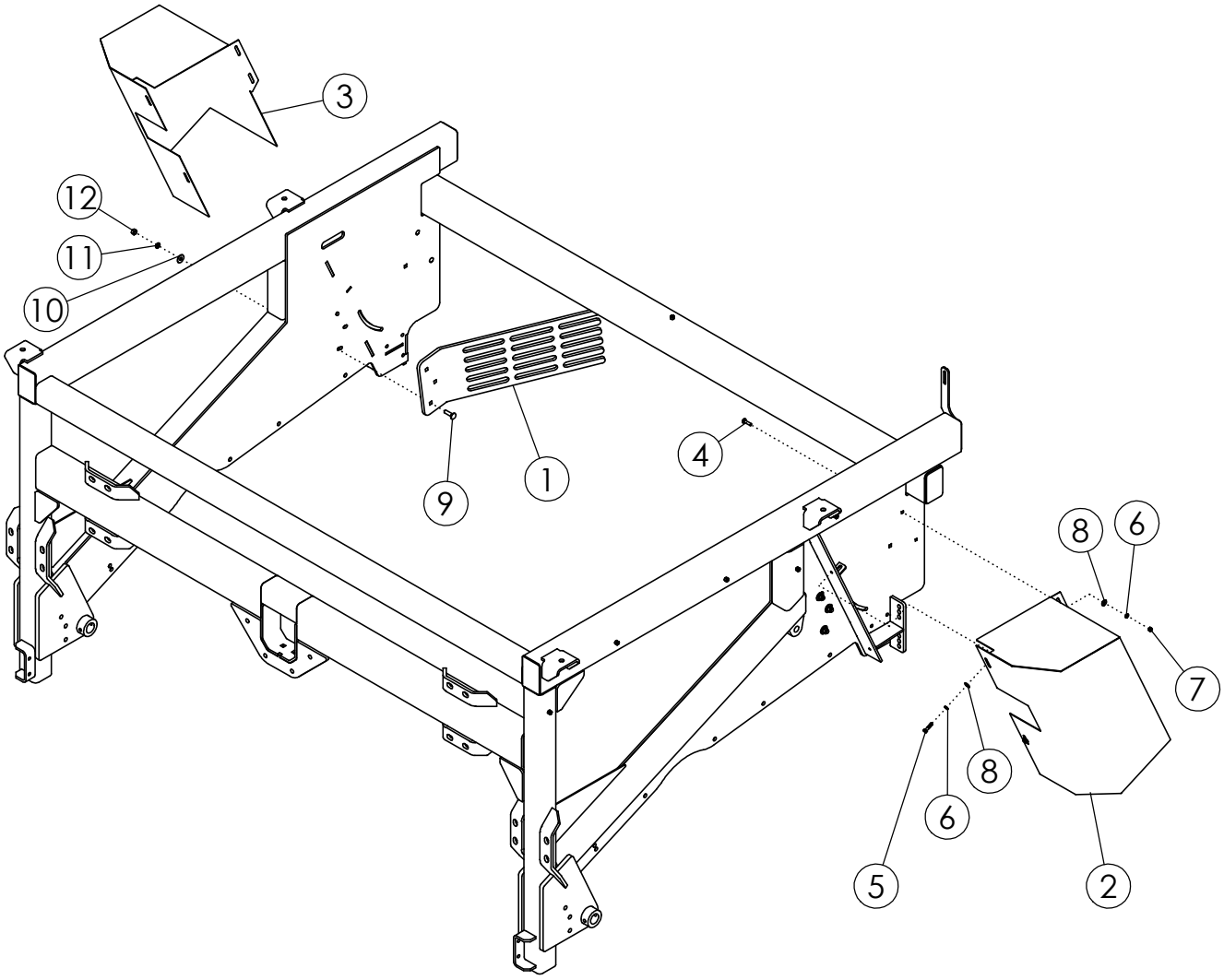
3
12
11
10
9
1
4
8
6
7
8
6
5
2

REAR GUARDS AND SHIELDS

ITEM	PART NO.	DESCRIPTION	QTY
1	300209	PLATE-DEFLECTOR	2
2	301165	WLDMT-REAR SHIELD LH	1
3	301166	WLDMT-REAR SHIELD RH	1
4	58679	BOLT-CRG: .38 X 1.50 NC GR5 ZP	4
5	1011602	BOLT-HEX: .38 X 1.50 NC GR5 ZP	4
6	1011586	WASHER-LOCK: .38 ZP	8
7	1030296	NUT-HEX: .38 NC GR5 NP	4
8	1011828	WASHER-FLAT .38 ZP	8
9	59517	BOLT-CRG: .50 X 1.75 NC GR5 ZP	6
10	1014443	WASHER-FLAT: .50 ZP	6
11	1011581	WASHER-LOCK: .50 ZP	6
12	1011577	NUT-HEX: .50 NC ZP	6

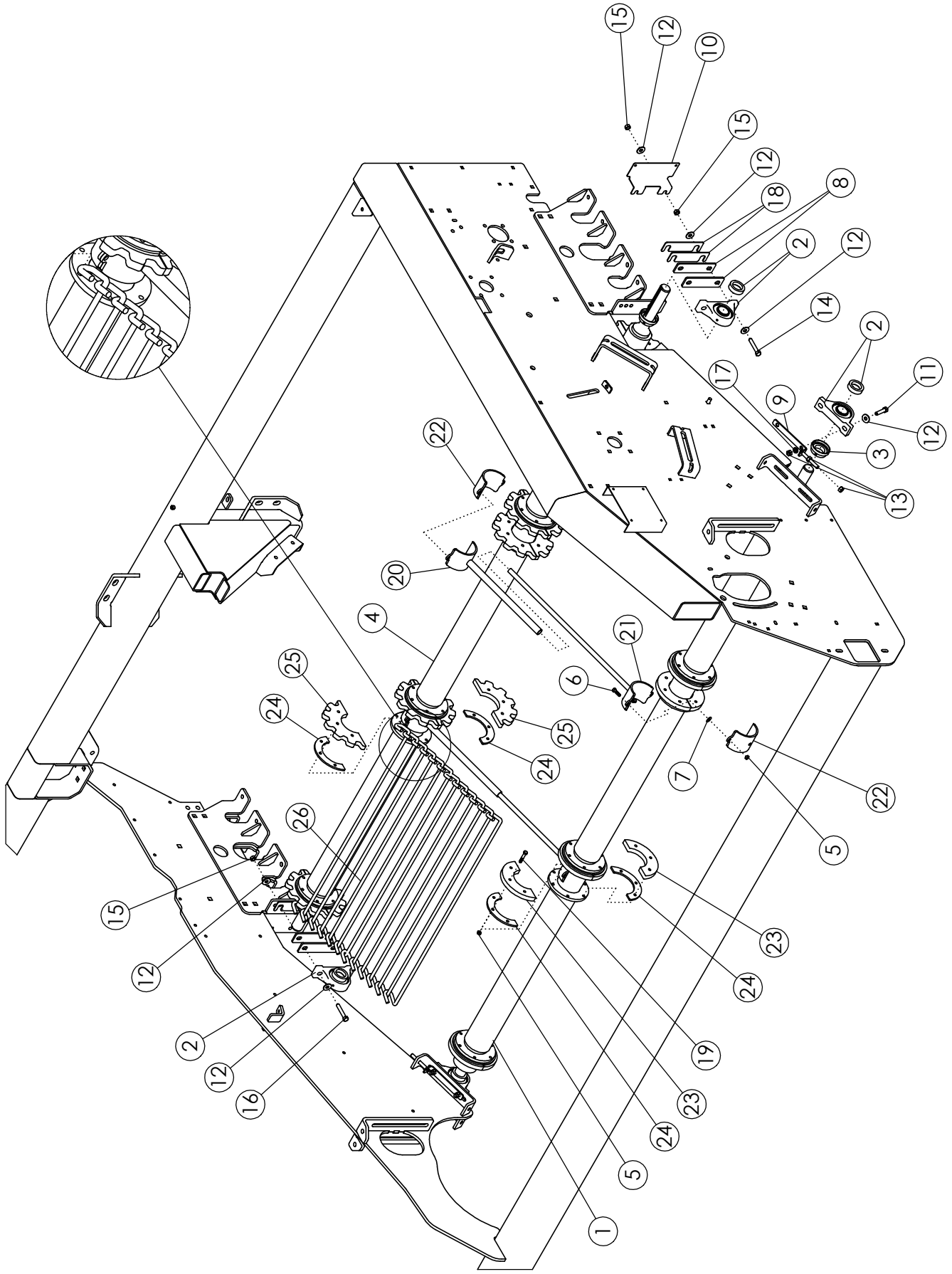
15
12
10
15
12
18
8
2
12
14
2
11
12
3
13
17
9
22
20
4
21
6
25
24
25
24
7
22
5
26
15
12
2
12
16
23
24
19
23
24
5
1

APRON SHAFT - 5/8 " CHAIN / BELT

ITEM	PART NO.	DESCRIPTION	QTY
1	63394	WLDMT- BOTTOM APRON SHAFT	2
2	52405	BEARING-PILLOW 1-3/4"	8
3	52382	SEAL PROTECTOR 1-3/4"	4
4	72555	WLDMT-TOP APRON SHAFT	2
5	1016999	NUT-TOPLOCK: .38 NC GR5 ZP	160
6	64991	BOLT-HEX: .38 X 1.25 NC GR8 ZP	16
7	1011828	WASHER-FLAT .38 ZP	16
8	56672	SHIM-BEARING	8
9	72606	WLDMT-ADJUSTER LOWER APRON ZP	4
10	72472	GUARD-BELT	2
11	1017708	BOLT-HEX: .50 X 2.25 NC GR5 ZP	8
12	1014443	WASHER-FLAT: .50 ZP	32
13	1011577	NUT-HEX: .50 NC ZP	4
14	1011601	BOLT-HEX: .50 X 3.00 NC GR5 ZP	8
15	1027461	NUT-TOPLOCK: .50 NC GR5 ZP	16
16	1011610	BOLT-HEX: .50 X 2.50 NC GR5 ZP	4
17	1011581	WASHER-LOCK: .50 ZP	8
18	300146	SHIM-BEARING .120 THK	8
19	1011725	BOLT-HEX: .38 X 2.00 NC GR5 ZP	144
	1011603	BOLT-HEX: .38 X 1.75 NC GR5 ZP	
20	64162	WLDMT-UPPER FILLER	4
	301532	WLDMT-UPPER FILLER 4" SHAFT WIDE	
21	64161	WLDMT-LOWER FILLER	4
	301531	WLDMT-LOWER FILLER 4" SHAFT WIDE	
22	64159	CLAMP-FILLER PAINTED	8
	301533	CLAMP-FILLER 4" SHAFT WIDE PAINTED	
23	58322	HALF-DISC	24
	63414	DISC-SPLIT COUNTER BORED	
24	62836	DISC-HALF SPACER ZP	48
25	58318	SPROCKET-HALF 2.38	24
	301075	SPROCKET-SPLIT 56MM 5/8 ROD 14T CB 4" SHAFT	
26	53844	CHAIN 1/2 X 42 X 2.38 - 23LPR	12
	53845	CHAIN 1/2 X 42 X 1.88 - 29LPR	
	59560	BELT-56MM APRON 1/2 X 42 (48 LPR)	6

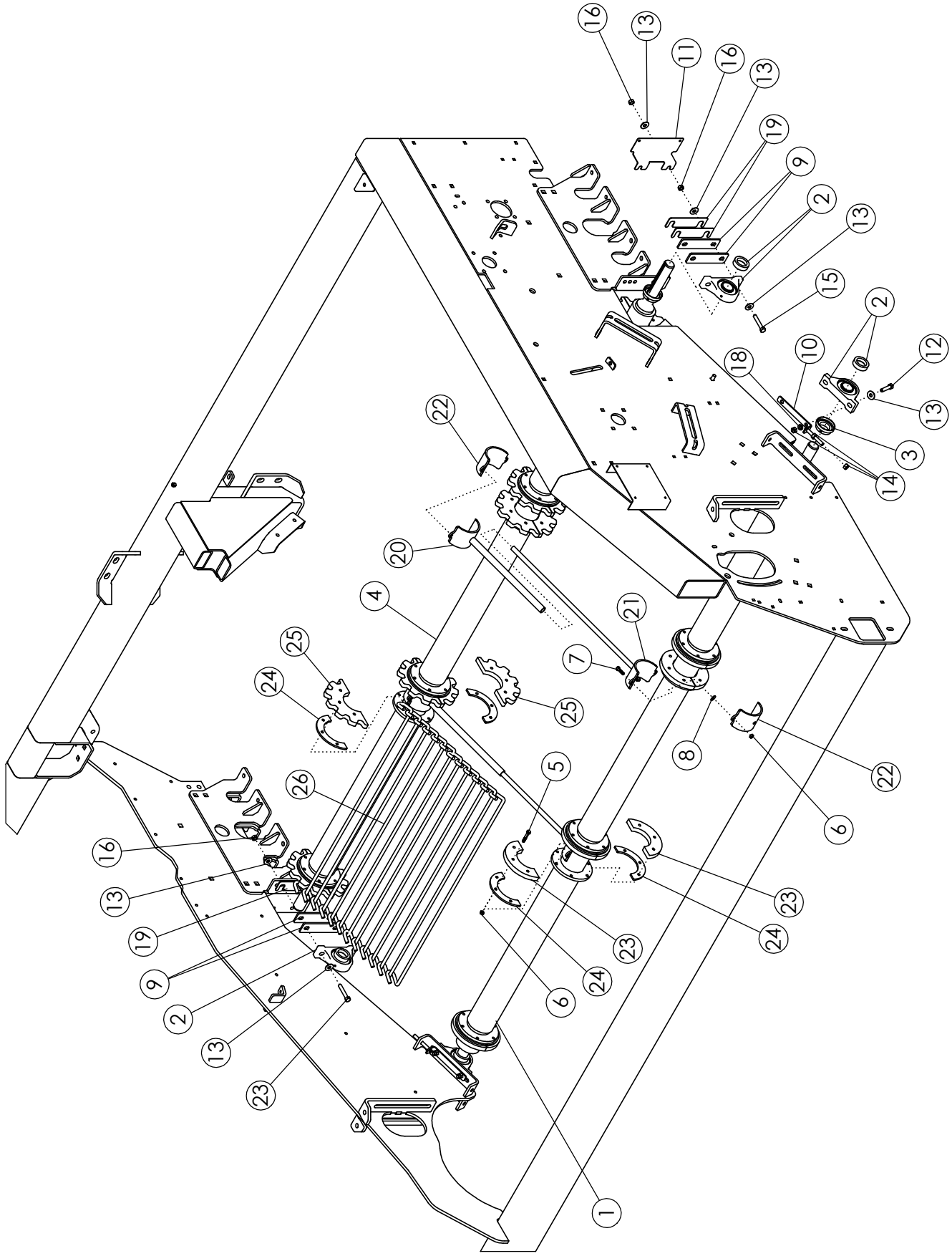
16
13
11
16
13
19
9
2
13
15
2
12
13
10
18
3
14
22
20
4
21
7
25
24
25
8
22
6
5
26
16
13
19
9
2
13
23
23
24
24
6
23
1

APRON SHAFT - CHAIN

ITEM	PART NO.	DESCRIPTION	QTY
1	63394	WLDMT- BOTTOM APRON SHAFT	2
2	52405	BEARING-PILLOW 1-3/4"	8
3	52382	SEAL PROTECTOR 1-3/4"	4
4	72555	WLDMT-TOP APRON SHAFT	2
5	1011603	BOLT-HEX: .38 X 1.75 NC GR5 ZP	144
6	1016999	NUT-TOPLOCK: .38 NC GR5 ZP	160
7	64991	BOLT-HEX: .38 X 1.25 NC GR8 ZP	16
8	1011828	WASHER-FLAT .38 ZP	16
9	56672	SHIM-BEARING	8
10	72606	WLDMT-ADJUSTER LOWER APRON ZP	4
11	72472	GUARD-BELT	2
12	1017708	BOLT-HEX: .50 X 2.25 NC GR5 ZP	8
13	1014443	WASHER-FLAT: .50 ZP	32
14	1011577	NUT-HEX: .50 NC ZP	8
15	1011611	BOLT-HEX: .50 X 3.00 NC GR5 ZP	4
16	1027461	NUT-TOPLOCK: .50 NC GR5 ZP	16
17	1011610	BOLT-HEX: .50 X 2.50 NC GR5 ZP	4
18	1011581	WASHER-LOCK: .50 ZP	8
19	300146	SHIM-BEARING .120 THICK	8
20	64162	WLDMT-UPPER FILLER	4
21	64161	WLDMT-LOWER FILLER	4
22	64159	CLAMP-FILLER PAINTED	8
23	58322	HALF-DISC	24
24	62836	DISC-HALF SPACER ZP	48
25	58318	SPROCKET-HALF 2.38	24
26	53846	CHAIN 5/8 X 42 X 2.38 - 23LPR	12

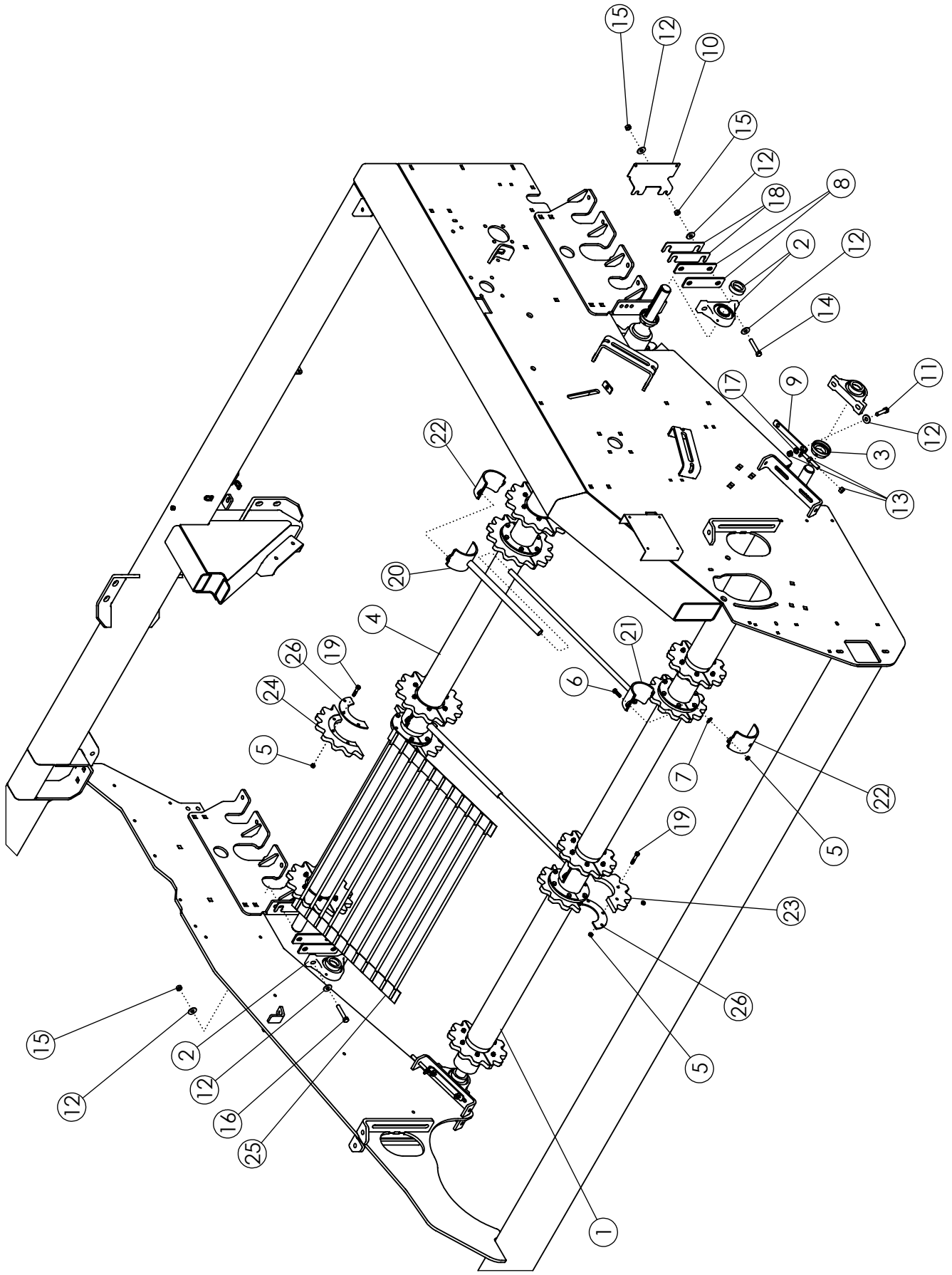
15
12
10
15
12
18
8
2
12
14
11
12
3
13
17
9
22
20
4
21
6
26
19
24
5
7
22
5
19
23
26
5
1
15
12
2
12
16
25

APRON SHAFT - BELTED CHAIN

ITEM	PART NO.	DESCRIPTION	QTY
1	302433	WLDMT- BOTTOM APRON SHAFT	2
2	52405	BEARING-PILLOW 1-3/4"	8
3	52382	SEAL PROTECTOR 1-3/4"	4
4	72555	WLDMT-TOP APRON SHAFT	2
5	1016999	NUT-TOPLOCK: .38 NC GR5 ZP	160
6	64991	BOLT-HEX: .38 X 1.25 NC GR8 ZP	16
7	1011828	WASHER-FLAT .38 ZP	16
8	56672	SHIM-BEARING	8
9	72606	WLDMT-ADJUSTER LOWER APRON ZP	4
10	72472	GUARD-BELT	2
11	1017708	BOLT-HEX: .50 X 2.25 NC GR5 ZP	8
12	1014443	WASHER-FLAT: .50 ZP	32
13	1011577	NUT-HEX: .50 NC ZP	4
14	1011611	BOLT-HEX: .50 X 3.00 NC GR5 ZP	8
15	1027461	NUT-TOPLOCK: .50 NC GR5 ZP	16
16	11610	BOLT-HEX: .50 X 2.50 NC GR5 ZP	4
17	1011581	WASHER-LOCK: .50 ZP	8
18	300146	SHIM-BEARING .120 THK	8
19	1011603	BOLT-HEX: .38 X 1.75 NC GR5 ZP	144
20	301532	WLDMT-UPPER FILLER 4" SHAFT WIDE	4
21	301531	WLDMT-LOWER FILLER 4" SHAFT WIDE	4
22	301533	CLAMP-FILLER 4" SHAFT WIDE PAINTED	8
23	69255	SPROCKET-SPLIT 56MM 12T APRON	12
	63414	DISC-SPLIT COUNTER BORED	
24	301075	SPROCKET-SPLIT 56MM 5/8 ROD 14T CB 4" SHAI	12
25	69659	BELT-56MM APRON 5/8 X 42 (48 LPR)	6
	59560	BELT-56MM APRON 1/2 X 42 (48 LPR)	
26	303216	DISC-HALF WEAR PLATE 4"	8

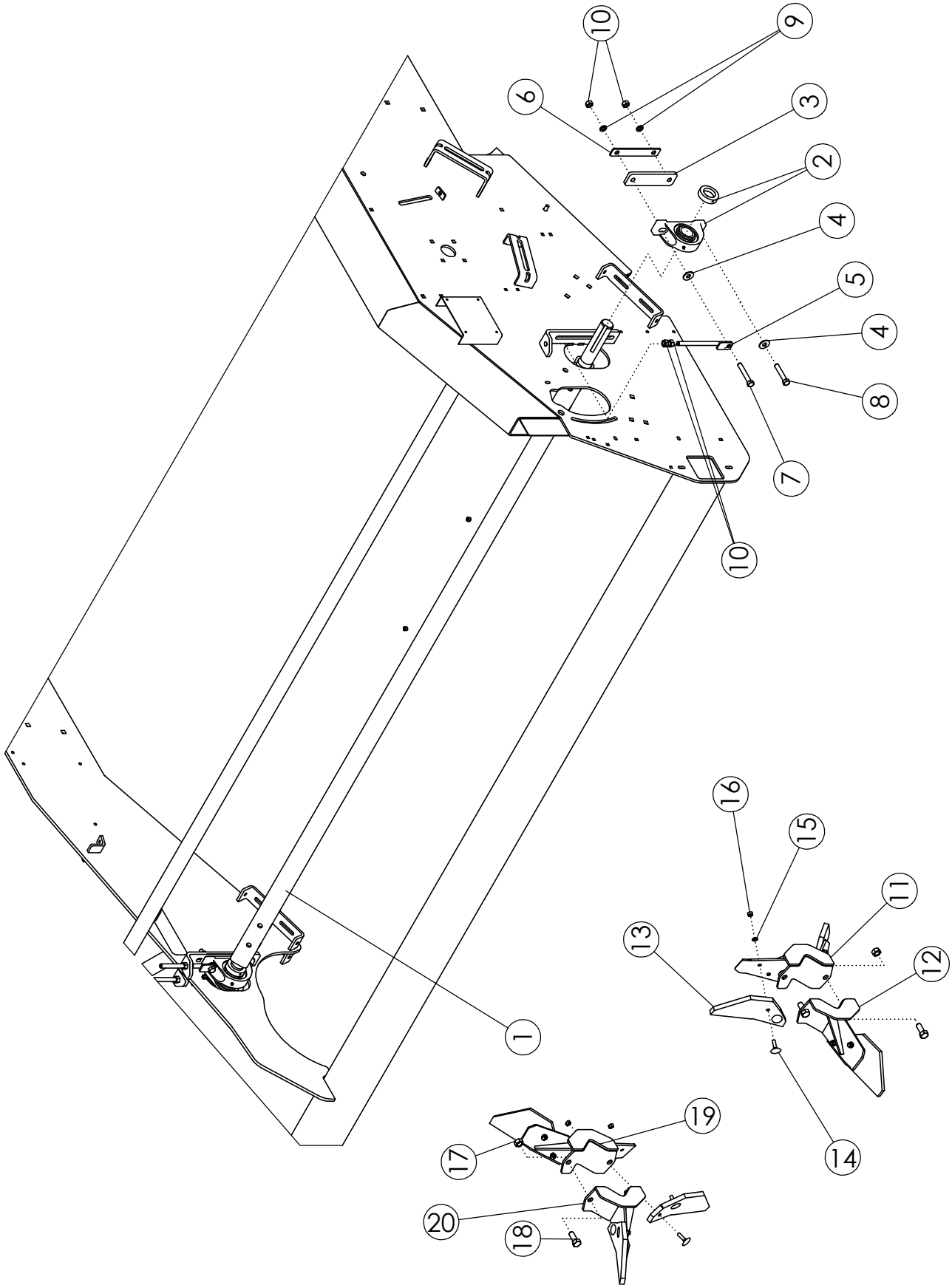
10
9
6
3
2
4
5
4
8
7
10
16
15
11
13
12
1
14
19
17
20
18

PADDLE SHAFT

ITEM	PART NO.	DESCRIPTION	QTY
1	72035	WLDMT-PADDLE SHAFT 12R	2
2	57997	BEARING-PILLOW 2"	4
3	57996	SHIM-BEARING ZP	4
4	1013024	WASHER-FLAT: .63 ZP	8
5	51365	TIGHTENER BOLT	4
6	57998	PLATE-BACKING ZP	4
7	1016726	BOLT-HEX: .63 X 4.00 NC GR5 ZP	4
8	1014000	BOLT-HEX: .63 X 3.50 NC GR5 ZP	4
9	1011813	WASHER-LOCK: .63 ZP	8
10	1011578	NUT-HEX: .63 NC GR2 ZP	16
11	50719	WLDMT - PADDLE DOUBLE LH	12
12	50720	WLDMT - PADDLE LH SINGLE	12
13	51562	PADDLE-RUBBER	72
14	1030779	BOLT-ELEVATOR: .38 X 1.50 NC ZP	144
15	1011586	WASHER-LOCK: .38 ZP	144
16	1011576	NUT-HEX: .38 NC GR2 ZP	144
17	1016595	NUT-TOPLOCK: .63 NC GR5 ZP	48
18	1014349	BOLT-HEX: .63 X 1.50 NC GR5 ZP	48
19	50722	WLDMT - PADDLE DOUBLE RH	12
20	50721	WLDMT - PADDLE RH SINGLE	12

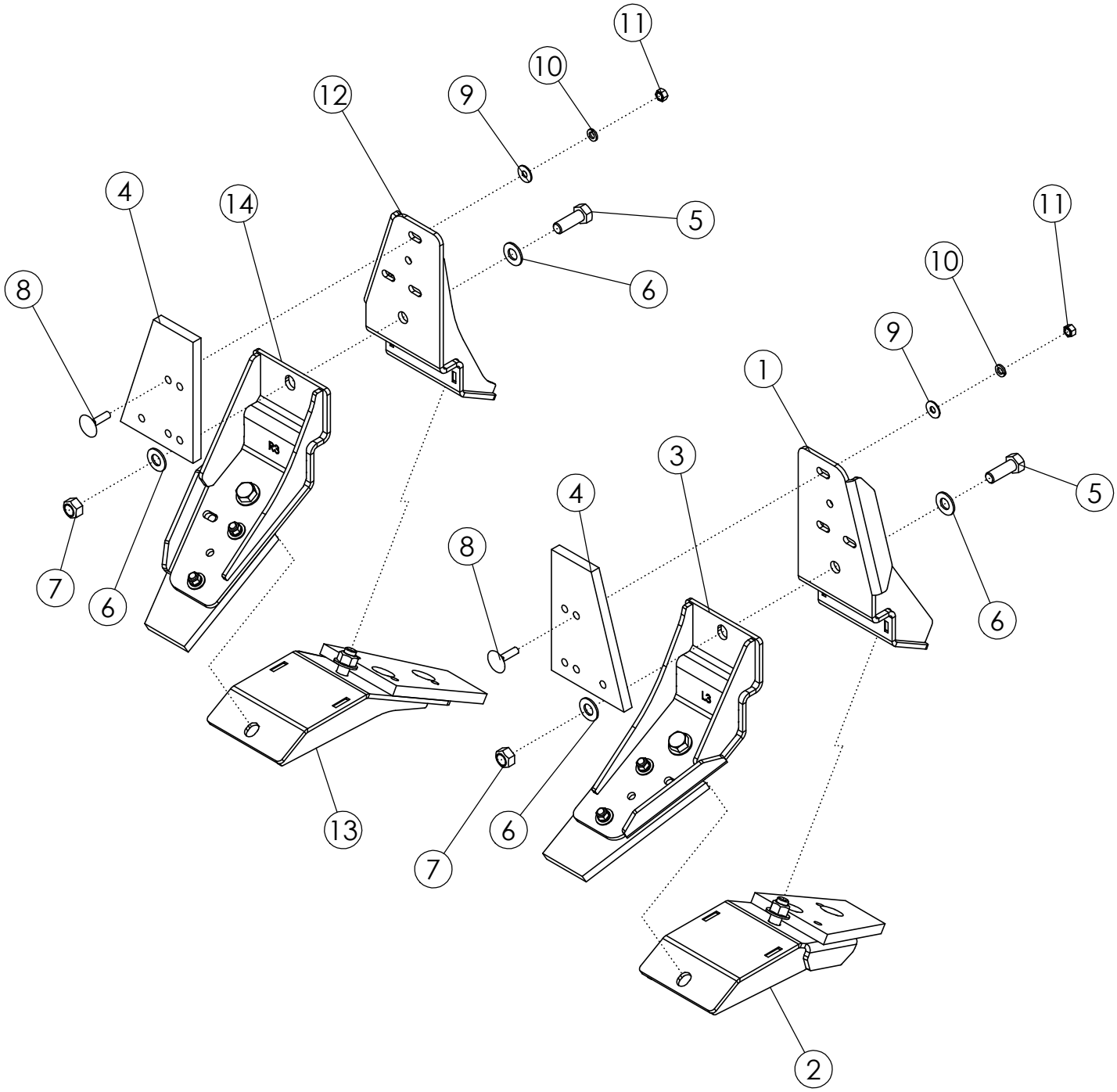
11
10
12
9
4
14
5
11
6
10
8
9
1
3
5
4
8
7
6
6
13
6
7
2

HYBRID PADDLE ASSY

ITEM	PART NO.	DESCRIPTION	QTY
1	301863	WLDMT-PADDLE SPLIT LH 1	1
2	301867	WLDMT-PADDLE SPLIT LH 2	1
3	301871	WLDMT-PADDLE SPLIT LH 3	1
4	301875	PADDLE-RUBBER SOLID	6
5	1013918	BOLT-HEX .63 X 1.750 NC GR5 ZP	6
6	1013004	WASHER-FLAT : SAE.63 ZP	12
7	1016595	NUT-TOPLOCK: .63 NC GR5 ZP	6
8	1030779	BOLT-ELEVATOR: .38 X 1.50 NC ZP	18
9	1011828	WASHER-FLAT: .38 ZP	18
10	1011586	WASHER-LOCK: .38 ZP	18
11	1011576	NUT-HEX: .38 NC GR2 ZP	18
12	301865	WLDMT-PADDLE SPLIT RH 1	1
13	301869	WLDMT-PADDLE SPLIT RH 2	1
14	301873	WLDMT-PADDLE SPLIT RH 3	1

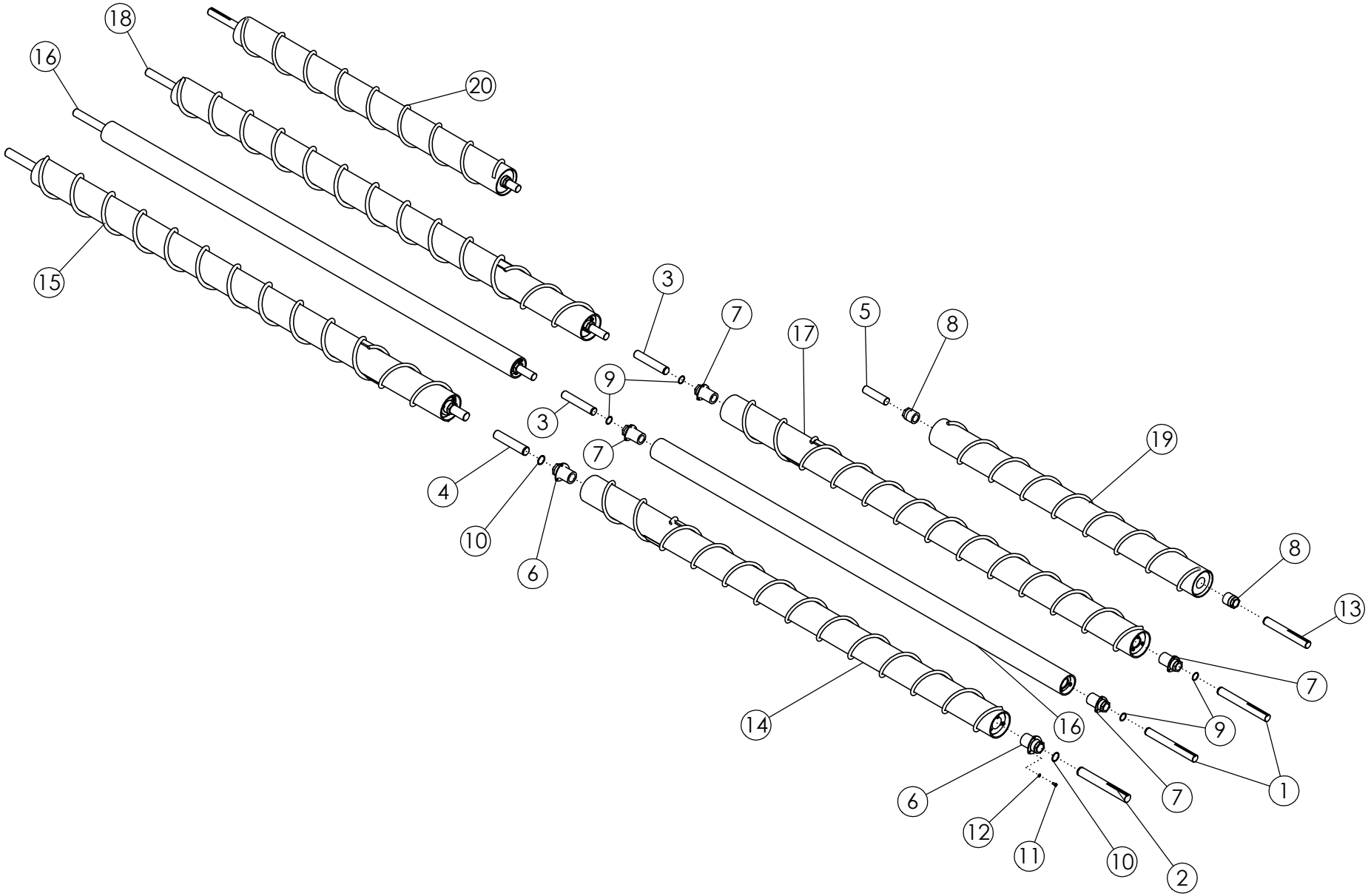
18
16
20
15
3
7
17
5
8
9
3
7
19
4
10
6
8
13
7
14
16
9
1
6
7
12
11
10
2

FRONT CLEANING ROLLS

ITEM	PART NO.	DESCRIPTION	QTY
		PARTS COMMON TO ALL ROLLS	
1	72542	SHAFT-#2,3,4 DRIVE END	4
2	72539	SHAFT-#1 DRIVE END	2
3	72543	SHAFT-#2,3 IDLER END	4
4	72540	SHAFT-#1 IDLER END	2
5	72794	SHAFT-STUB #4	2
6	64165	TRANTORQUE 2.00 X 3.375	4
7	64163	TRANTORQUE 1.75 X 3.375	8
8	58459	TRANTORQUE 1.75 HD	4
9	64184	RING-RETAINING 1.75	8
10	64185	RING-RETAINING 2.00	4
11	1011599	BOLT-HEX: .38 X .75 NC GR5 ZP	36
12	1011586	WASHER-LOCK: .38 ZP	36
13	72930	SHAFT-DRIVE #4 12R	2
		NUMBER ONE ROLL - - LEFT HAND (COMPLETE)	
14	72533	WLDMT-#1LH SCROLLED-12R-STD-TT	1
	72547	WLDMT-#1LH SCROLLED-12R-POLY-TT	
	73022	WLDMT-#1LH SCROLLED-12R-HRD-TT	
		NUMBER ONE ROLL - - RIGHT HAND (COMPLETE)	
15	72534	WLDMT-#1RH SCROLLED-12R-STD-TT	1
	72548	WLDMT-#1RH SCROLLED-12R-POLY-TT	
	73023	WLDMT-#1RH SCROLLED-12R-HRD-TT	
		NUMBER TWO ROLL (COMPLETE)	
16	72541	ASSY-#2-12R-5.5" STD-TT	2
	72551	ASSY-#2,12R-5" POLY-TT	
		NUMBER THREE ROLL - -LEFT HAND (COMPLETE)	
17	72544	WLDMT-#3LH SCROLLED-12R-STD-TT	1
	72553	WLDMT-#3LH SCROLLED-12R-POLY-TT	
	73024	WLDMT-#3LH SCROLLED-12R-HRD-TT	
	302282	WLDMT-#3LH SCROLLED-12R-STD-TT SHORT	
	302291	WLDMT-#3LH SCROLLED-12R-POLY-TT SHORT	
	302379	WLDMT-#3LH SCROLLED-12R-HRD-TT-SRT	

CONTINUED

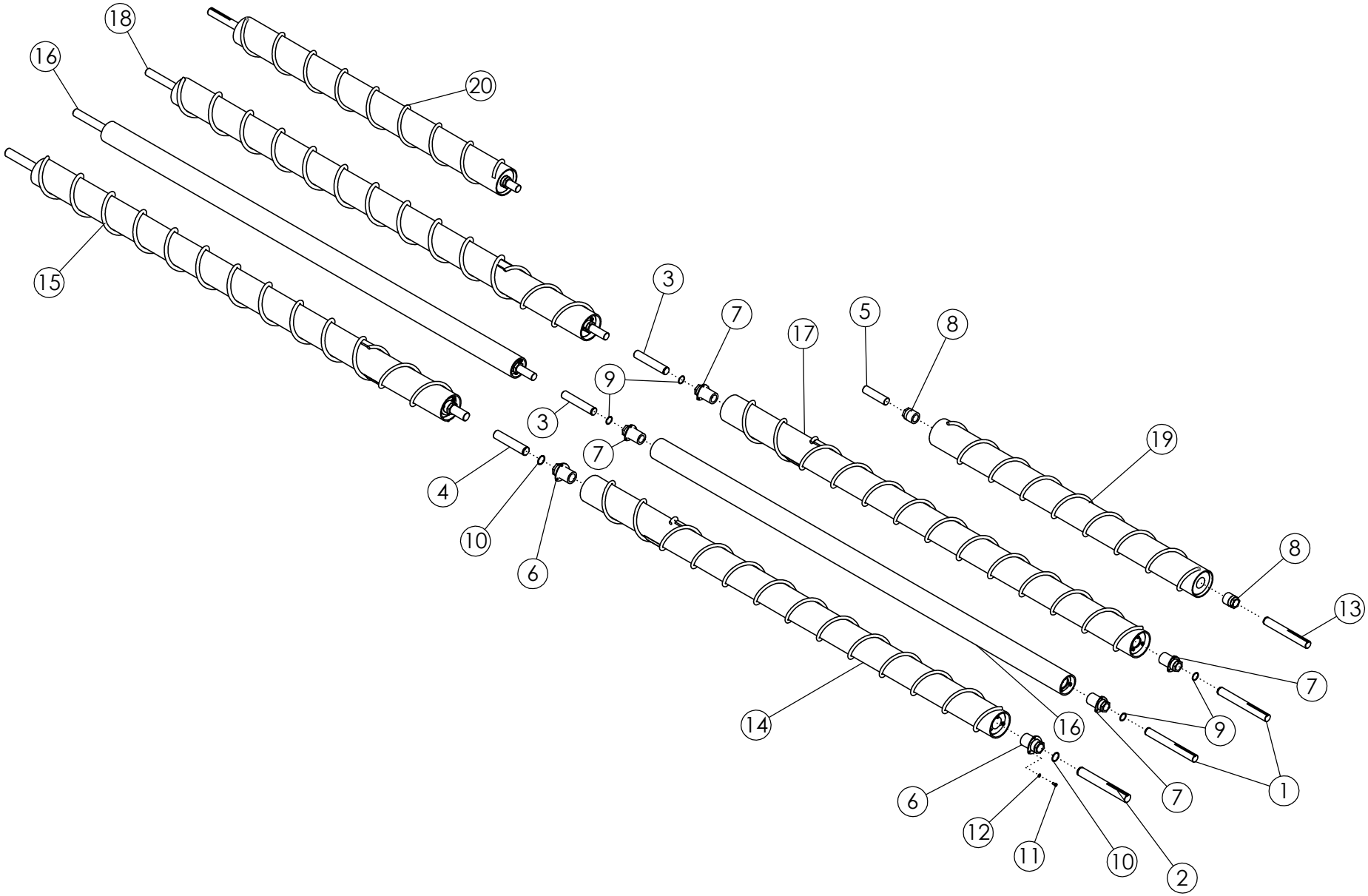
18
16
20
15
3
7
17
5
8
9
3
7
19
4
10
6
8
13
7
14
16
9
1
6
7
12
11
10
2

FRONT CLEANING ROLLS (CONTINUED)			
ITEM	**PART NO.**	**DESCRIPTION**	**QTY**
NUMBER THREE ROLL - - RIGHT HAND (COMPLETE)			
18	72545	WLDMT-#3RH SCROLLED-12R-STD-TT	1
	72554	WLDMT-#3RH SCROLLED-12R-POLY-TT	
	73025	WLDMT-#3RH SCROLLED-12R-HRD-TT	
	302281	WLDMT-#3RH SCROLLED-12R-STD-TT SHORT	
	302290	WLDMT-#3RH SCROLLED-12R-POLY-TT SHORT	
	302378	WLDMT-#3RH SCROLLED-12R-HRD-TT-SRT	
NUMBER FOUR ROLL - -LEFT HAND (COMPLETE)			
19	73247	WLDMT-#4LH SCROLLED-12R-STD-TT	1
	73302	WLDMT-#4LH SCROLLED POLY-12R SHORT	
NUMBER FOUR ROLL - - RIGHT HAND (COMPLETE)			
20	73253	WLDMT-#4RH SCROLLED-12R-STD-TT	1
	73303	WLDMT-#4RH SCROLLED POLY-12R SHORT	

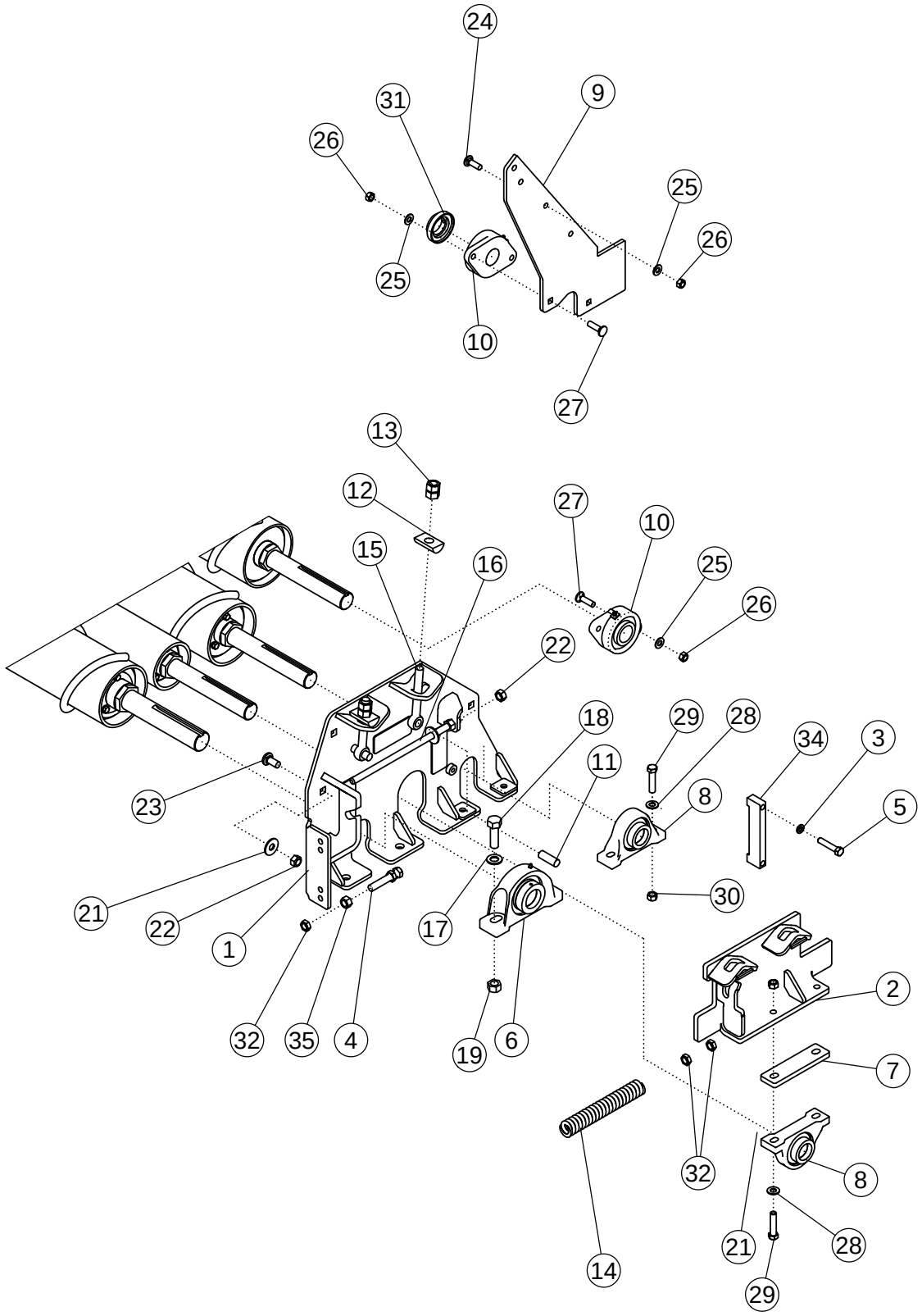
24
9
31
26
25
26
25
10
27
13
12
27
10
15
16
25
26
22
18
29
28
34
3
11
8
5
23
21
22
1
17
30
32
35
4
19
6
2
7
32
8
21
28
14
29

FRONT CLEANING ROLL MOUNTING PACKAGE

ITEM	PART NO.	DESCRIPTION	QTY
1	73132	WLDMT-MOUNT LH	2
	73133	WLDMT-MOUNT RH (NOT SHOWN)	2
2	73136	WLDMT-SLIDE MOUNT LH	2
	73137	WLDMT-SLIDE MOUNT RH (NOT SHOWN)	2
3	1011581	WASHER-LOCK: .50 ZP	8
4	1032273	BOLT-TAP: .63 X 3.50 NC GR5 ZP	4
5	1011610	BOLT-HEX: .50 X 2.50 NC GR5 ZP	8
6	57997	BEARING-PILLOW 2"	4
	73029	ASSY-STEEL PILLOW BLK BRG 2.00"	
7	57792	SHIM-BEARING	4
8	52405	BEARING-PILLOW 1-3/4"	8
	64466	ASSY-STEEL PILLOW BLK BRG 1-3/4"	
9	73272	MOUNT-#4 BEARING	2
10	62134	BEARING-FLANGE 1-3/4"	4
11	56675	ROD ZP	8
12	56680	HALF ROUND 1.5" ZP	8
13	1011620	NUT-HEX: .75 NC GR2 ZP	16
14	57878	SPRING 10"	4
15	56814	BOLT-EYEBOLT: .75 X 6.00 ZP	8
16	56815	WLDMT-BOLT & NUT ZP	4
17	1012634	WASHER-FLAT: SAE .75 ZP	8
18	1016598	BOLT-HEX: .75 X 2.50 NC GR5 ZP	8
19	1017000	NUT-TOPLOCK: .75 NC GR5 ZP	8
20	58635*	BOLT-CRG: .63 X 2.00 NC GR5 ZP (NOT SHOWN)	4
21	1013024	WASHER-FLAT: .63 ZP	16
22	1016595	NUT-TOPLOCK: .63 NC GR5 ZP	16
23	72063	BOLT-CRG: .63 X 1.50 NC GR5 ZP	8
24	1011607	BOLT-HEX: .50 X 1.50 NC GR5 ZP	4
25	1011584	WASHER-FLAT: SAE .50 ZP	12
26	1027461	NUT-TOPLOCK: .50 NC GR5 ZP	12
27	59517	BOLT-CRG: .50 X 1.75 NC GR5 ZP	8
28	59104	WASHER-FLAT: .56 GR8 ZP	16
29	59103	BOLT-HEX: .56 X 2.50 NC GR8 ZP	16
30	59105	NUT-TOPLOCK: .56 NC GR8 ZP	16
31	52383	LOCK PROTECTOR 1-3/4"	2
32	1026259	NUT-JAM: .63 NC GR2 ZP	16
33	57877*	SPRING 3" (NOT SHOWN)	4
34	56677	PLATE-RETAINING	4
35	1011578	NUT-HEX: .63 NC GR2 ZP	4

* USED ON CENTER MOUNTS ONLY

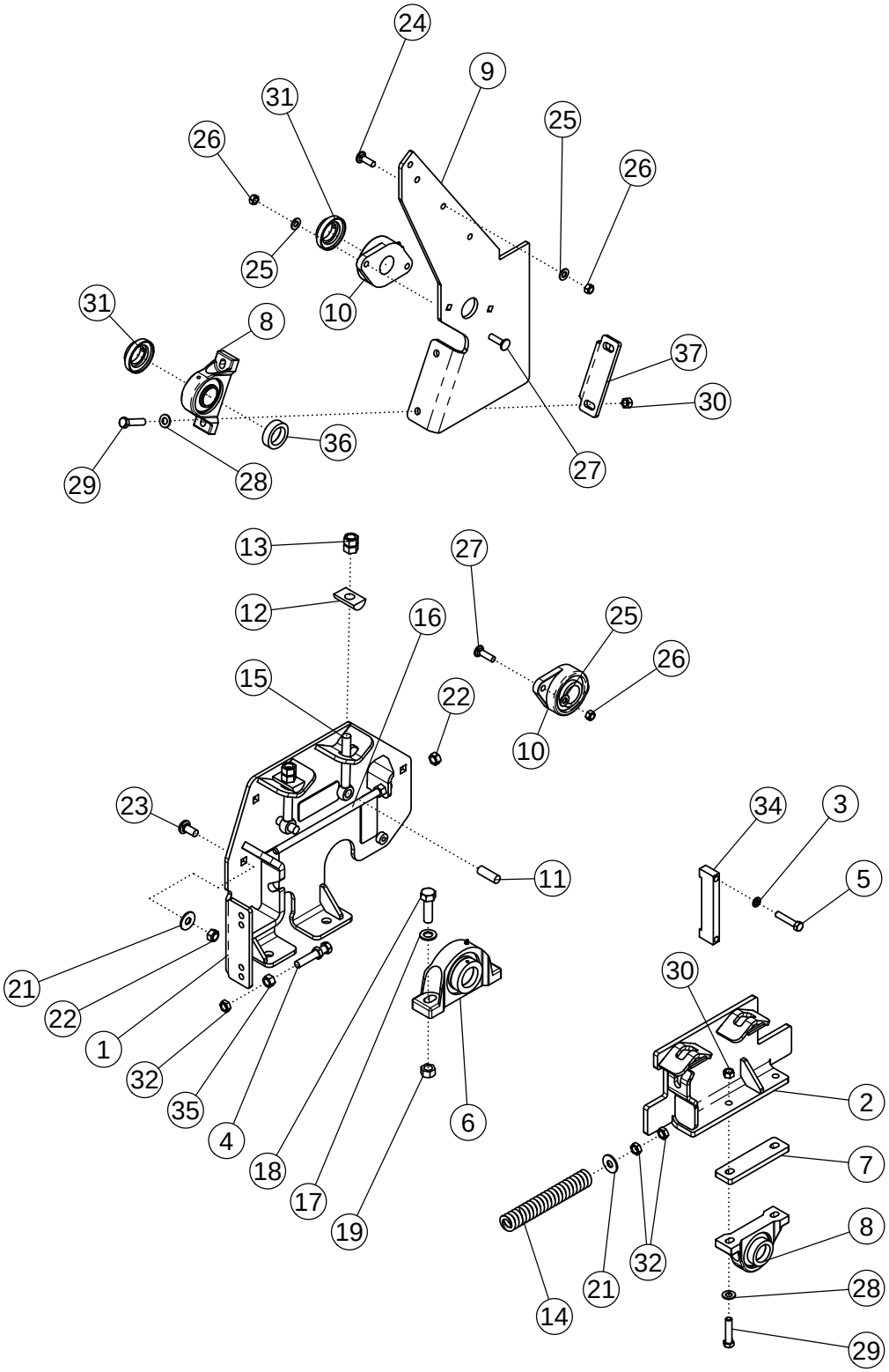
24
9
31
25
26
26
25
10
31
8
37
30
36
29
28
27
13
27
12
16
25
26
15
22
10
23
34
3
11
5
21
30
22
1
32
35
4
6
2
18
7
17
19
8
32
21
28
14
29

FRONT CLEANING ROLL MOUNTING PACKAGE - SHORT #3 GRABROLL (OPTION)

ITEM	PART NO.	DESCRIPTION	QTY
1	302294	WLDMT-MOUNT LH	2
	302292	WLDMT-MOUNT RH (NOT SHOWN)	2
2	73136	WLDMT-SLIDE MOUNT LH	2
	73137	WLDMT-SLIDE MOUNT RH (NOT SHOWN)	2
3	1011581	WASHER-LOCK: .50 ZP	8
4	1032273	BOLT-TAP: .63 X 3.50 NC GR5 ZP	4
5	1011610	BOLT-HEX: .50 X 2.50 NC GR5 ZP	8
6	57997	BEARING-PILLOW 2"	4
7	57792	SHIM-BEARING	4
8	52405	BEARING-PILLOW 1-3/4"	8
9	302299	PLATE-MOUNT#4 BEARING LH	1
	302296	PLATE-MOUNT#4 BEARING RH (NOT SHOWN)	1
10	62134	BEARING-FLANGE 1-3/4"	4
11	56675	ROD ZP	8
12	56680	HALF ROUND 1.5" ZP	8
13	1011620	NUT-HEX: .75 NC GR2 ZP	16
14	57878	SPRING 10"	4
15	56814	BOLT-EYEBOLT: .75 X 6.00 ZP	8
16	56815	WLDMT-BOLT & NUT ZP	4
17	1012634	WASHER-FLAT: SAE .75 ZP	8
18	1016598	BOLT-HEX: .75 X 2.50 NC GR5 ZP	8
19	1017000	NUT-TOPLOCK: .75 NC GR5 ZP	8
20	58635*	BOLT-CRG: .63 X 2.00 NC GR5 ZP (NOT SHOWN)	4
21	1013024	WASHER-FLAT: .63 ZP	16
22	1016595	NUT-TOPLOCK: .63 NC GR5 ZP	16
23	72063	BOLT-CRG: .63 X 1.50 NC GR5 ZP	8
24	1011607	BOLT-HEX: .50 X 1.50 NC GR5 ZP	4
25	1011584	WASHER-FLAT: SAE .50 ZP	12
26	1027461	NUT-TOPLOCK: .50 NC GR5 ZP	12
27	59517	BOLT-CRG: .50 X 1.75 NC GR5 ZP	8
28	59104	WASHER-FLAT: .56 GR8 ZP	16
29	59103	BOLT-HEX: .56 X 2.50 NC GR8 ZP	16
30	59105	NUT-TOPLOCK: .56 NC GR8 ZP	16
31	52383	LOCK PROTECTOR 1-3/4"	4
32	1026259	NUT-JAM: .63 NC GR2 ZP	16
33	57877*	SPRING 3" (NOT SHOWN)	4
34	56677	PLATE-RETAINING	4
35	1011578	NUT-HEX: .63 NC GR2 ZP	4
36	52382	SEAL PROTECTOR	2
37	302326	PLATE-BENT	2

* USED ON CENTER MOUNTS ONLY

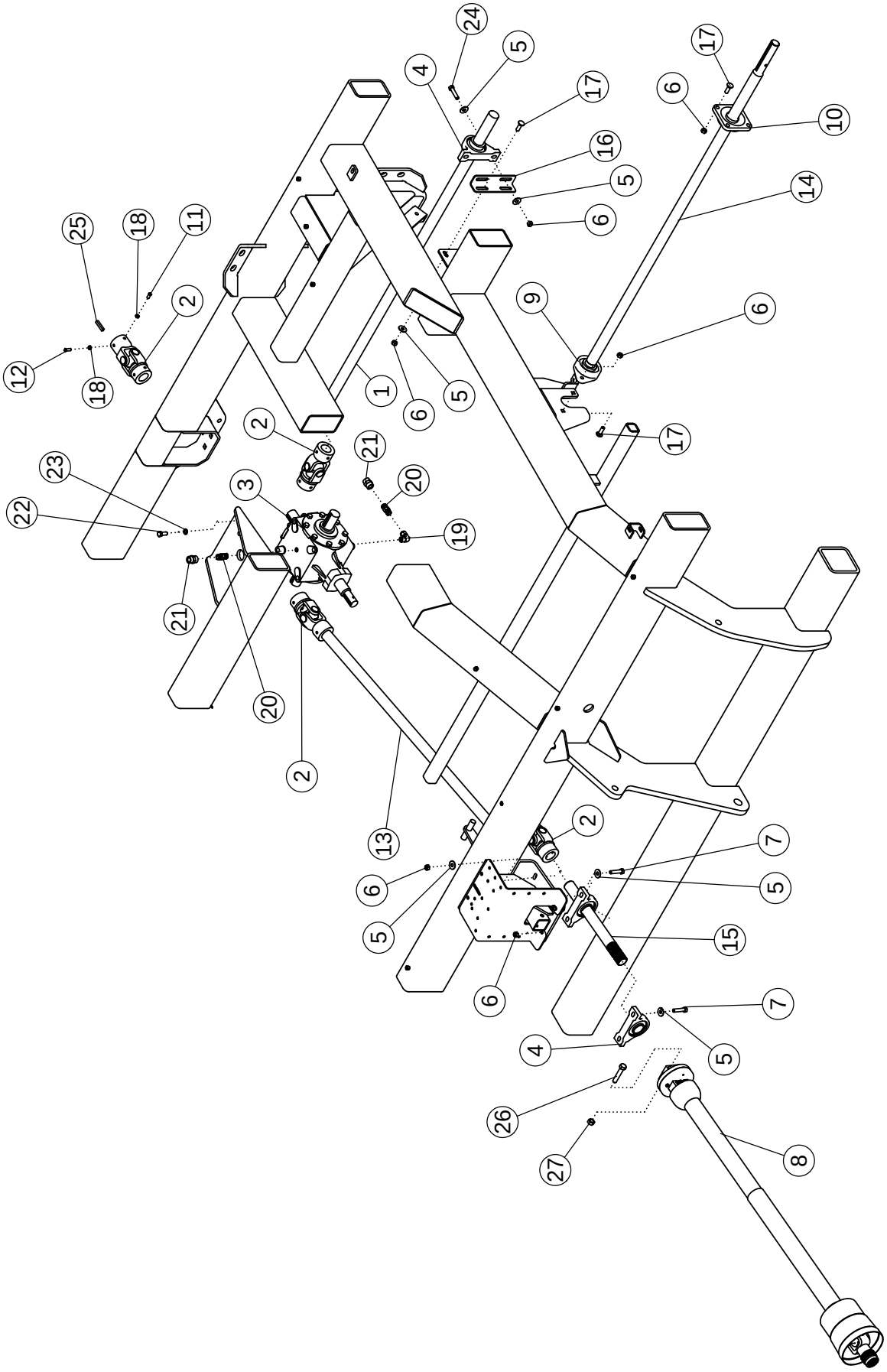
24
5
4
17
6
17
10
16
5
14
6
25
18
11
2
9
6
12
18
1
6
5
2
21
17
23
3
20
22
19
21
20
2
13
2
7
6
5
5
15
6
7
4
5
26
27
8

MAIN DRIVE

ITEM	PART NO.	DESCRIPTION	QTY
1	73140	SHAFT-DRIVE CROSS 12R	2
2	53642	U-JOINT, 35 SERIES W/EXTENDED LUBE	5
3	73131	GEARBOX-PRARIE 1.82:1 4 WAY	1
4	52405	BEARING-PILLOW 1.75"	4
5	1014443	WASHER-FLAT: .50 ZP	18
6	1027461	NUT-TOPLOCK: .50 NC GR5 ZP	24
7	1017708	BOLT-HEX: .50 X 2.25 NC GR5 ZP	4
8	301558	PTO-CV 1-3/4"-20 X 90 WEASLER (HRV)	1
9	62134	BEARING-FLANGE 1.75 2-BOLT	2
10	52404	BEARING-FLANGE 1.75	2
11	1030708	SCREW-SET: C-P .38 X .75 NC GR8	10
12	1030709	SCREW-SET: C-P .38 X 1.00 NC GR8	10
13	73141	SHAFT-DRIVE 12R FRONT	1
14	73143	SHAFT JACK 1.75	2
15	72078	SPLINE SHAFT	1
16	68274	PLATE-BEARING SUPPORT	2
17	1011660	BOLT-CRG: .50 X 1.50 NC GR5 ZP	16
18	1013519	NUT-JAM: .38 NC GR2 ZP	20
19	64033	FTG-ELBOW: 8MP-8FP 90	1
20	69128	FTG-ADAPTER: 8MP-8MP 4" LONG	2
21	55730	FTG-ADAPTER: 8FP-8FP	2
22	1032509	BOLT-HEX: .63 X 1.25 NC GR5 ZP	4
23	1011813	WASHER-LOCK: .63 ZP	4
24	1011609	BOLT-HEX: .50 X 2.00 NC GR5 ZP	4
25	50152	KEY .38 X .38 X 2.00	10
26	1030704	BOLT-HEX: .63 X 3.25 NC GR8 ZP	2
27	1016595	NUT-TOPLOCK: .63 NC GR5 ZP	2

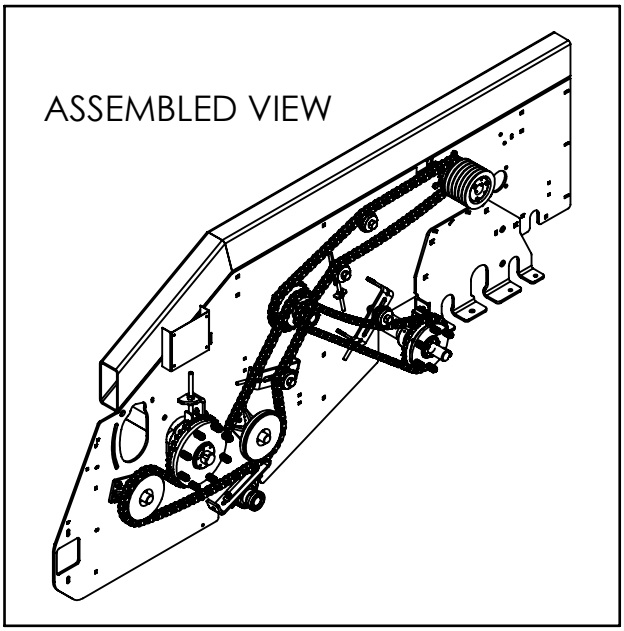
ASSEMBLED VIEW

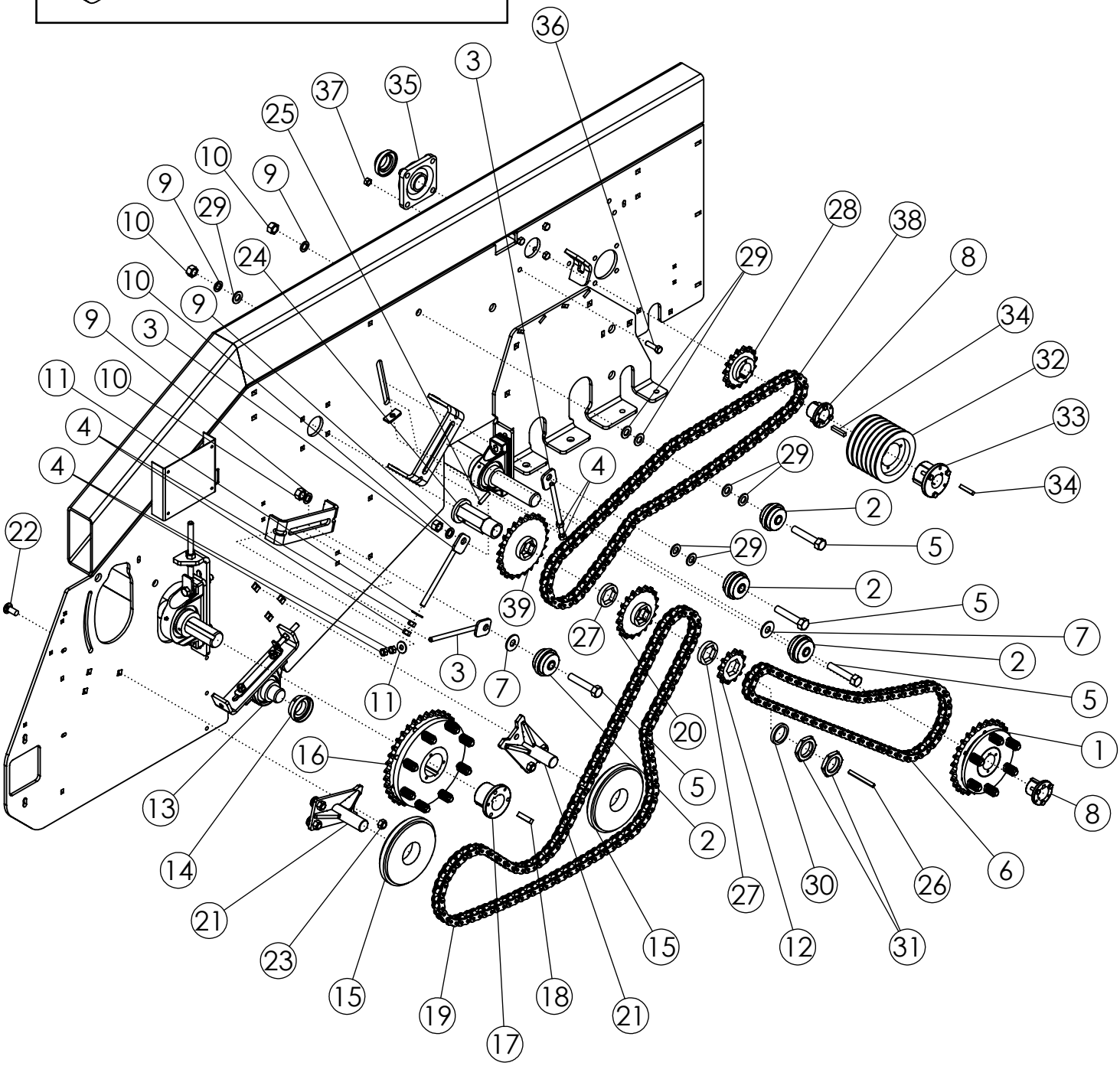
36
3
35
37
25
10
9
29
24
28
38
8
34
32
33
11
4
22
39
27
20
7
2
5
1
6
16
13
14
21
23
15
19
17
18
12
30
26
31

MAIN DRIVE-SIDE COMPONENTS

ITEM	PART NO.	DESCRIPTION	QTY
1	72030	SPROCKET-CLUTCH 80P28 PRESET	2
2	72080	IDLEMASTER X.75	8
3	56864	ADJUSTER - ZP	6
4	1011577	NUT-HEX: .50 NC GR2 ZP	12
5	1011625	BOLT-HEX: .75 X 4.00 NC GR5 ZP	8
6	302811	CHAIN-ROLLER 80H-1R-83	2
7	1030702	WASHER-FLAT .75 ZP	4
8	53641	HUB P1 1.75 (WITH KEY)	4
9	1012061	WASHER-LOCK: .75 ZP	8
10	1011620	NUT-HEX: .75 NC GR2 ZP	8
11	1014443	WASHER-FLAT: .50 ZP	4
12	72089	SPROCKET 8012 HEX BORE	2
13	52405	BEARING-PILLOW 1-3/4"	2
14	52382	SEAL PROTECTOR 1-3/4"`	2
15	56851	IDLEMASTER 8.50 X 1.44	4
16	57993	SPROCKET-CLUTCH 80Q36 PRESET	2
17	50385	HUB Q1 2"	2
18	57995	KEY .50 X .50 X 2.00	2
19	302810	CHAIN-ROLLER 80H-1R-122	2
20	303346	WLDMT-8019 SPROCKET HEX BORE ZP	2
	303347	WLDMT-8015 SPROCKET HEX BORE ZP	2
21	69625	WLDMT-IDLER PADDLE SHAFT	4
22	72063	BOLT-CRG: .63 X 1.50 NC GR5 ZP	12
23	1016595	NUT-TOPLOCK: .63 NC GR5 ZP	12
24	303349	WELDT-72082 HEX HUB W/END CAP	2
25	72084	PIN-ROLL: .25 X 2.25 NP	2
26	72085	KEY .38 X .38 X 2.00	2
27	303342	PLATE-HEX HUB SPACER	4
28	64155	SPROCKET H80-P15	2
29	1012634	WASHER-FLAT: SAE .75 ZP	14
30	72470	PLATE-SPACER	2
31	72090	NUT-JAM 1.875-16UN 2B ZP	4
32	56646	SHEAVE 6TB62	2
33	50335	HUB Q1 1-3/4"	2
34	50152	KEY .38 X .38 X 2.00	2
35	52404	BEARING-FLANGE 1.75 NOT TO SPEC	2
36	1011608	BOLT-HEX: .50 X 1.75 NC GR5 ZP	8
37	1027461	NUT-TOPLOCK: .50 NC GR5 ZP	8
38	302809	CHAIN-ROLLER CP 80H-1R-94	2
39	303344	WELDT-8024 SPROCKET HEX BORE ZP	2

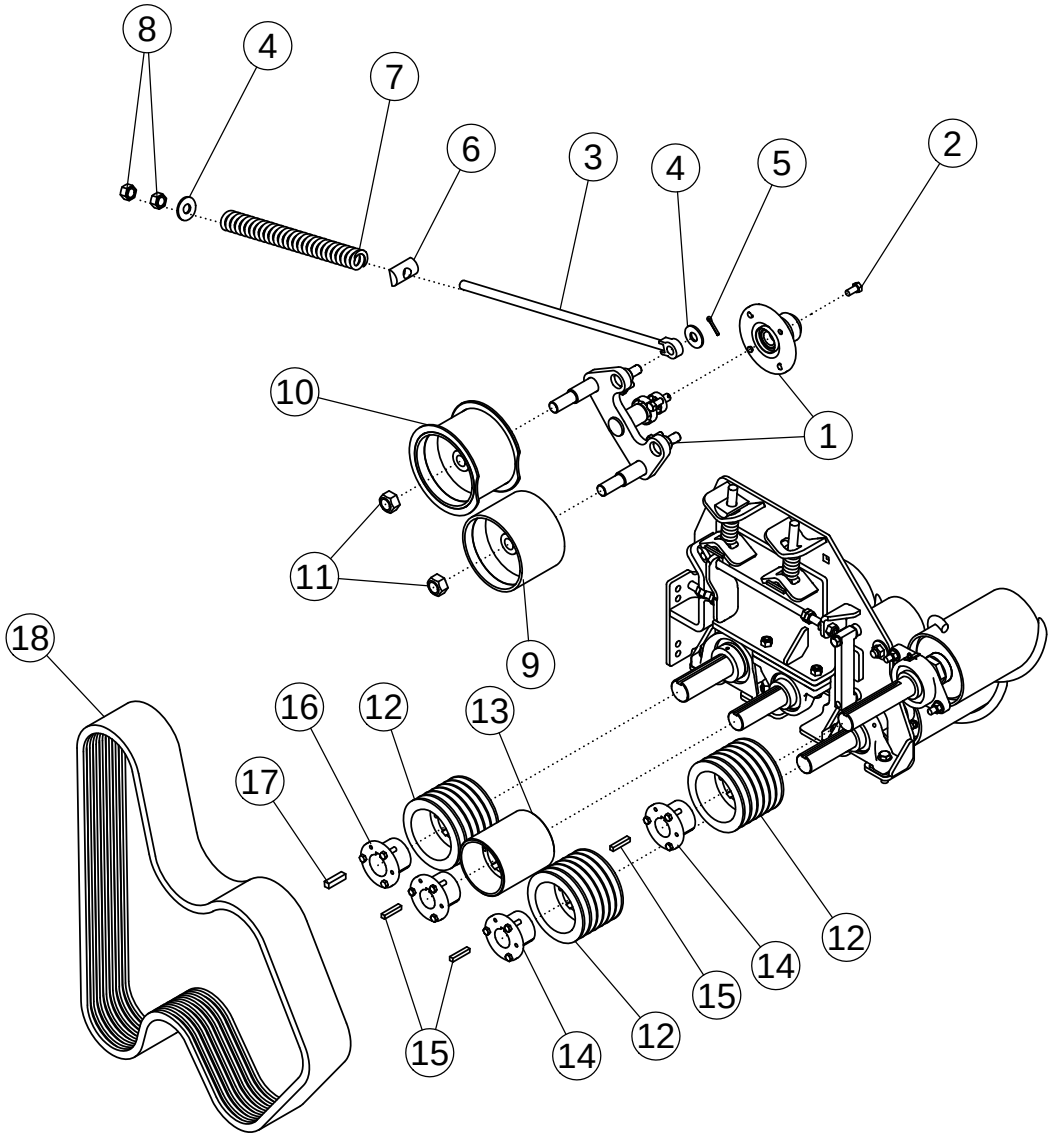
8
4
7
6
3
4
5
2
10
1
11
9
18
16
12
13
17
12
14
15
15
14
12

FRONT CLEANING ROLL DRIVE

ITEM	PART NO.	DESCRIPTION	QTY
1	72058	ASSY-SPINDLE & HUB	2
2	1015558	BOLT-HEX: .50 X 1.00 NF GR5 ZP	8
3	72057	ROD END .75 X 27.50	2
4	1030702	WASHER-FLAT: .75 ZP	4
5	1012375	PIN-COTTER .19 X 1.50 NP	2
6	56680	HALF ROUND 1.5" ZP	2
7	56853	SPRING-BLACK	2
8	1011620	NUT-HEX: .75 NC GR2 ZP	4
9	50387	WLDMT-IDLER	2
10	57933	WLDMT- IDLER	2
11	1016969	NUT-TOPLOCK: 1.00 NC GR5 ZP	4
12	56646	SHEAVE 6TB62	6
13	56396	WLDMT-PULLEY 6R	2
14	50335	HUB Q1 1-3/4"	6
15	50152	KEY .38 X .38 X 2.00	6
16	50385	HUB Q1 2"	2
17	57995	KEY .50 X .50 X 2.00	2
18	72056	V-BELT 6B108	2

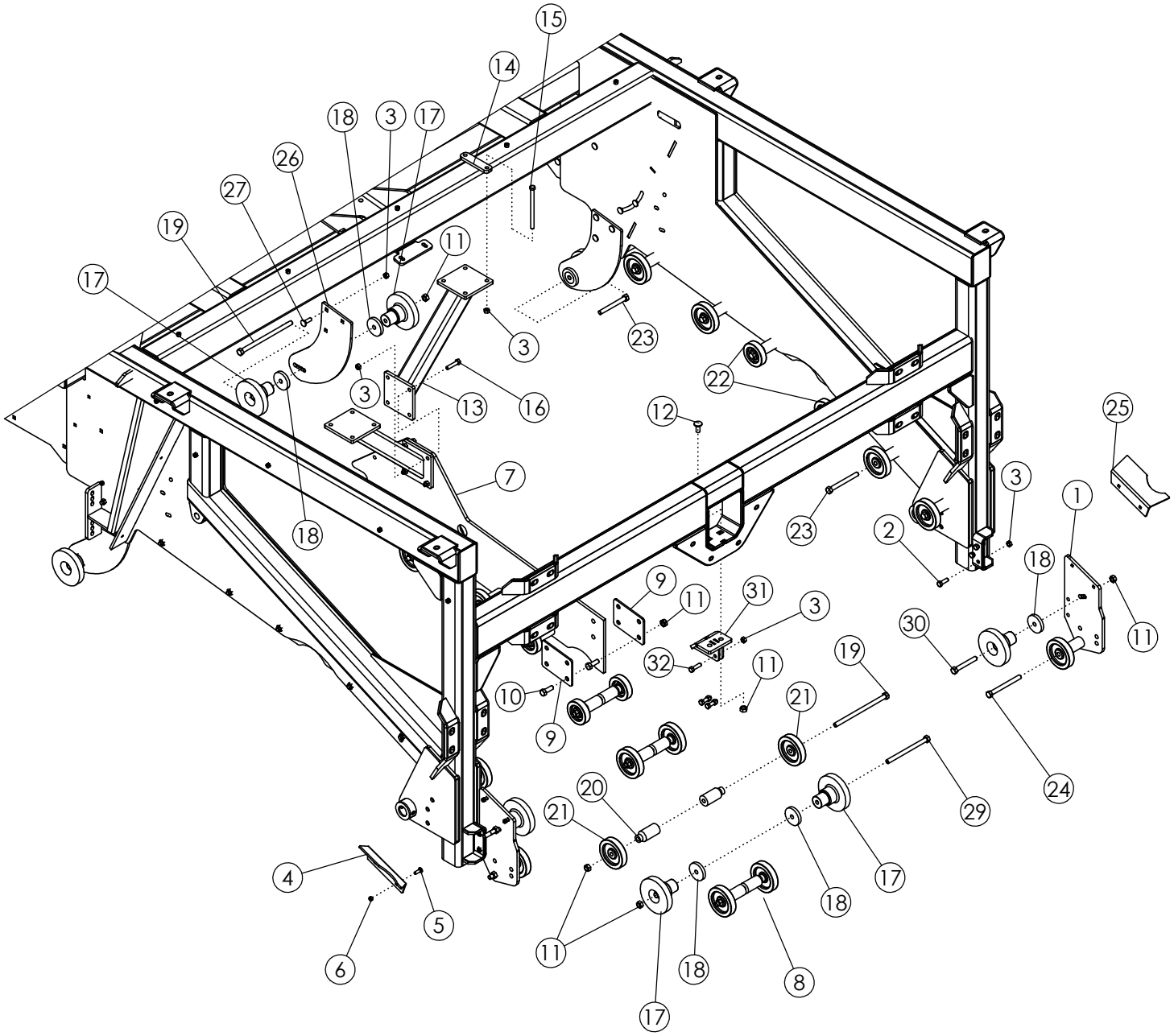
15
14
18
3
17
26
27
19
11
17
3
23
3
13
16
22
12
25
7
3
1
18
23
2
18
9
11
31
3
30
11
32
11
19
10
21
9
24
20
29
21
17
4
18
5
11
18
6
8
17

WHEEL JUMP CHAIN

ITEM	PART NO.	DESCRIPTION	QTY
1	73276	PLATE-LOWER IDLER MNT RH	2
2	1011607	BOLT-HEX: .50 X 1.50 NC GR5 ZP	4
3	1027461	NUT-TOPLOCK: .50 NC GR5 ZP	28
4	73285	PLATE-FILLER ANGLE RH	1
5	1016362	BOLT-CRG: .38 X 1.25 NC GR5 ZP	4
6	1016999	NUT-TOPLOCK: .38 NC GR5 ZP	4
7	73361	PLATE-CENTER PANEL REAR	1
8	73359	WLDMT-CENTER PANEL FRONT	1
9	73362	PLATE-BOLTING	2
10	1013918	BOLT-HEX: .63 X 1.75 NC GR5 ZP	4
11	1016595	NUT-TOPLOCK: .63 NC GR5 ZP	33
12	72063	BOLT-CRG: .63 X 1.50 NC GR5 ZP	2
13	72855	WLDMT-CENTER PANEL MNT	2
14	58204	BAR - BOLTING	4
15	1032525	BOLT-HEX: .50 X 8.00 NC GR5 ZP	8
16	1017708	BOLT-HEX: .50 X 2.25 NC GR5 ZP	4
17	54042	ROLLER-STEP 6"	8
18	62932	PLATE-SHIM .50 ZP	8
19	72773	BOLT-HEX: .63 X 11.00 NC GR5 ZP	8
20	64192	STAND OFF	28
21	53825	BOGIE WHEEL 5"	20
22	53854	BOGIE WHEEL 4"	8
23	1013068	BOLT-HEX: .63 X 6.00 NC GR5 ZP	14
24	1012913	BOLT-HEX .63 X 6.50 NC GR5 ZP	2
25	73286	PLATE-FILLER ANGLE LH	1
26	300283	PLATE-IDLER MOUNT	3
27	1011660	BOLT-CRG: .50 X 1.50 NC GR5 ZP	9
28	300278	BELT-45MM JUMP CHAIN 12R WH (NOT SHOWN)	2
	302381	BELT-45MM JUMP CHAIN 12R WHEEL SHORT#3	
29	1030762	BOLT-HEX: .63 X 8.50 NC GR5 ZP	1
30	1013935	BOLT-HEX: .63 X 4.50 NC GR5 ZP	2
31	301814	WLDMT-CENTER PANEL MOUNTING BRACKET	1
32	1011608	BOLT-HEX: .50 X 1.75 NC GR5 ZP	3

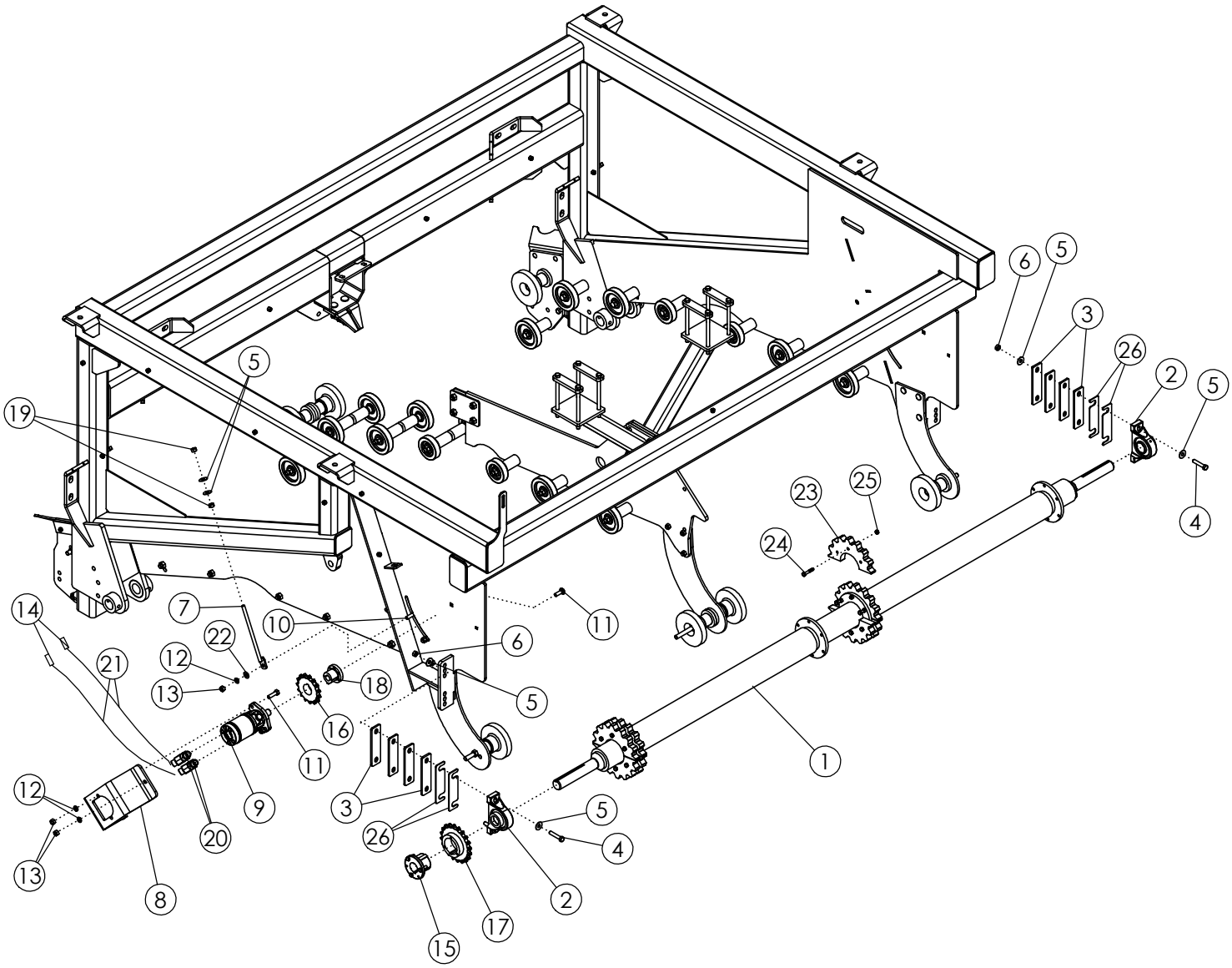
6
5
3
26
2
5
4
5
19
23
25
24
14
7
10
22
12
21
13
18
16
11
6
5
11
1
12
13
8
20
9
3
26
5
4
2
17
15

WHEEL JUMP DRIVE

ITEM	PART NO.	DESCRIPTION	QTY
1	73363	WLDMT-TOP JUMP SHAFT 52" 12R	1
2	52405	BEARING-PILLOW 1-3/4"	2
3	56672	SHIM-BEARING ZP	8
4	1011612	BOLT-HEX: .50 X 3.50 GR5 ZP	4
5	1014443	WASHER-FLAT: .50 ZP	8
6	1027461	NUT-TOPLOCK: .50 NC GR5 ZP	4
7	69670	WLDMT-ADJUSTMENT ROD ZP	1
8	301189	PLATE-MOTOR MNT SLIDE	1
9	58987	MOTOR-HYDRAULIC 20 IN^3/REV	1
	57880	SEAL KIT FOR 58987	
10	59517	BOLT-CRG: .50 X 1.75 NC GR5 ZP	1
11	1011660	BOLT-CRG: .50 X 1.50 NC GR5 ZP	4
12	1011581	WASHER-LOCK: .50 ZP	3
13	1011577	NUT-HEX: .50 NC ZP	5
14	36290	PIONEER TIP 8015-15 (#8 ORB)	2
15	50335	HUB Q1 1-3/4"	1
16	64155	SPROCKET H80-P15	1
17	56650	SPROCKET H80-Q20	1
18	53719	HUB P1 1-1/4" 5/16" KEY	1
19	73388	CHAIN ROLLER (NOT SHOWN)	1
20	56229	FTG-ELBOW: 10MB-8MJ-45	2
21	300179	HOSE: .50 X 384 8MB-8FJX	2
22	1011584	WASHER-FLAT: SAE .50 ZP	5
23	301333	SPROCKET-45MM 16T 1" THICK PAIR	4
24	1011725	BOLT-HEX: .38 X 2.00 NC GR5 ZP	24
25	1016999	NUT-TOPLOCK: .38 NC GR5 ZP	24
26	300146	SHIM-BEARING .120 THK	4

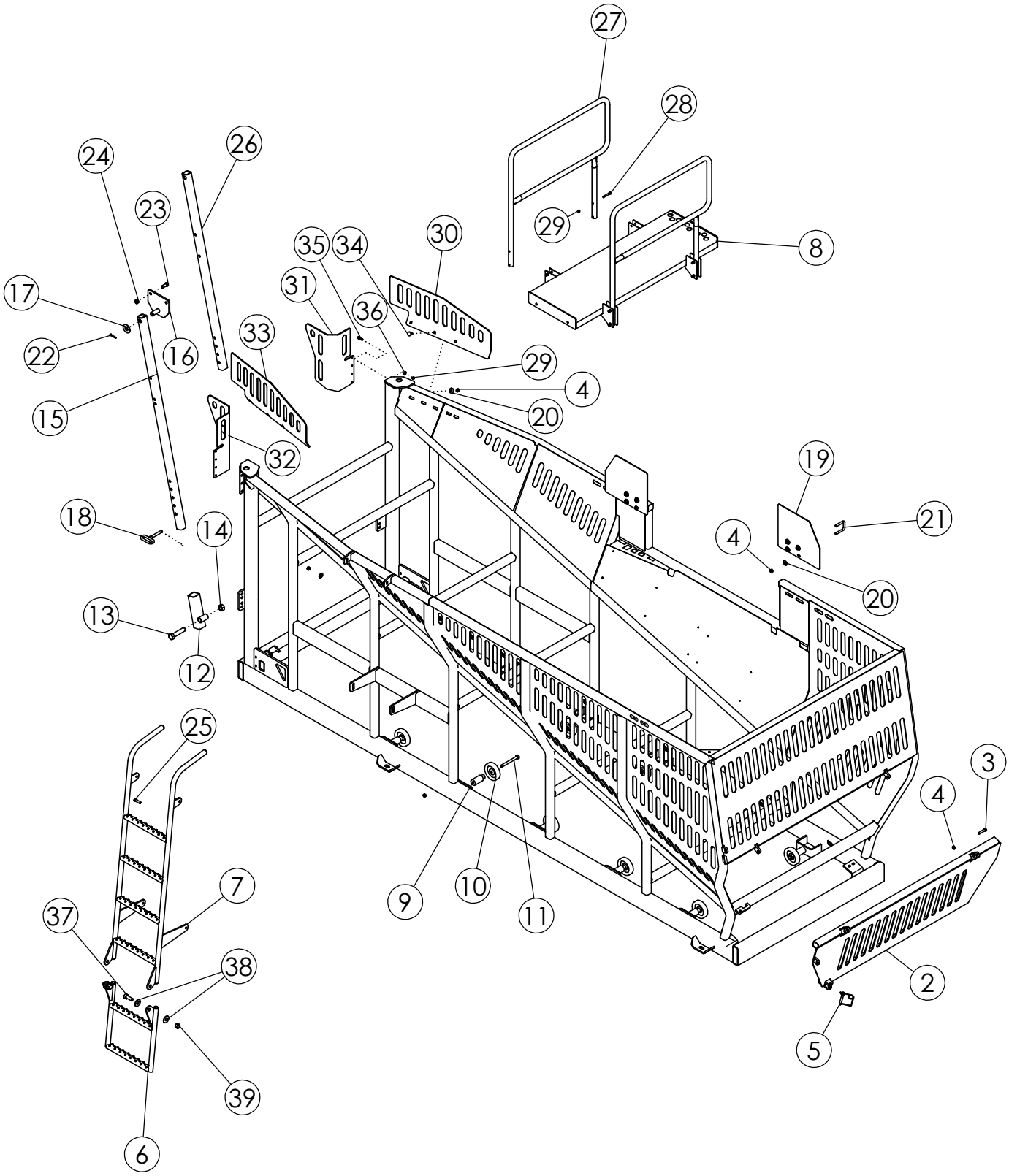
27
28
26
24
23
29
8
35
34
30
31
17
36
33
22
16
29
4
15
20
32
19
18
14
21
4
20
13
12
25
3
4
7
9
10
11
37
38
2
5
39
6

TANK 12R WHEEL

ITEM	PART NO.	DESCRIPTION	QTY
1	301793	WLDMT-TANK 12R WHEEL	1
2	301788	WLDMT-TANK DOOR 12R	1
3	1017708	BOLT-HEX: .50 x 2.25 NC GR5 ZP	1
4	1027461	NUT-TOPLOCK: .50 NC GR5 ZP	30
5	52408	SPRING PIN .50 X 3.50	1
6	72435-2	WLDMT-LADDER BOTTOM 2 RUNG 12R	1
7	72420	WLDMT-LADDER TOP	1
8	72824	WLDMT-CATWALK 12R	1
9	64192	STAND OFF	10
10	53825	BOGIE WHEEL 5"	10
11	1013068	BOLT-HEX: .63 X 6.00 NC GR5 ZP	10
12	54788	WLDMT-LOCK SLIDE	1
13	72956	BOLT-HEX: 1.00 X 4.50 NC GR8 ZP	1
14	1016969	NUT-TOPLOCK: 1.00 NC GR5 ZP	1
15	72934	TUBE-LOCK LONG	1
16	54785	WLDMT-LOCK BRACKET	1
17	1020685	WASHER-FLAT: 1.00	1
18	1030947	PIN-HITCH: .63 X 4.00 ZP	1
19	57917	PLATE	2
20	1014443	WASHER-FLAT: .50 ZP	18
21	65658	U-BOLT: .50 X 3 X 2.06 X 3	4
22	1016944	PIN-COTTER: .25 X 2.00 ZP	1
23	1014349	BOLT-HEX: .63 X 1.50 NC GR5 ZP	1
24	1016595	NUT-TOPLOCK: .63 NC GR5 ZP	1
25	1011608	BOLT-HEX: .50 X 1.75 NC GR5 ZP	1
26	73413	TUBE-LOCK SHORT	1
27	72857	WLDMT-SIDE RAIL	2
28	1015174	BOLT-HEX: .38 X 2.50 NC GR5 ZP	8
29	1016999	NUT-TOPLOCK: .38 NC GR5 ZP	17
30	301994	PLATE-TANK DEFLECTOR 12R REAR EXTENDED	1
31	301995	PLATE-BOOM DEFLECTOR 12R REAR EXTENDED	1
32	301997	PLATE-BOOM DEFLECTOR 12R FRONT EXTENDED	1
33	301996	PLATE-TANK DEFLECTOR 12R FRONT EXTENDED	1
34	1023854	BOLT-CRG: .50 X 1.25 NC GR5 ZP	10
35	1011601	BOLT-HEX: .38 X 1.25 NC GR5 ZP	8
36	1011828	WASHER-FLAT .38 ZP	8
37	1012060	BOLT-HEX: .75 X 2.00 NC GR5 ZP	2
38	1030702	WASHER-FLAT: .75 ZP	4
39	1017000	NUT-TOPLOCK: .75 NC GR5 ZP	2

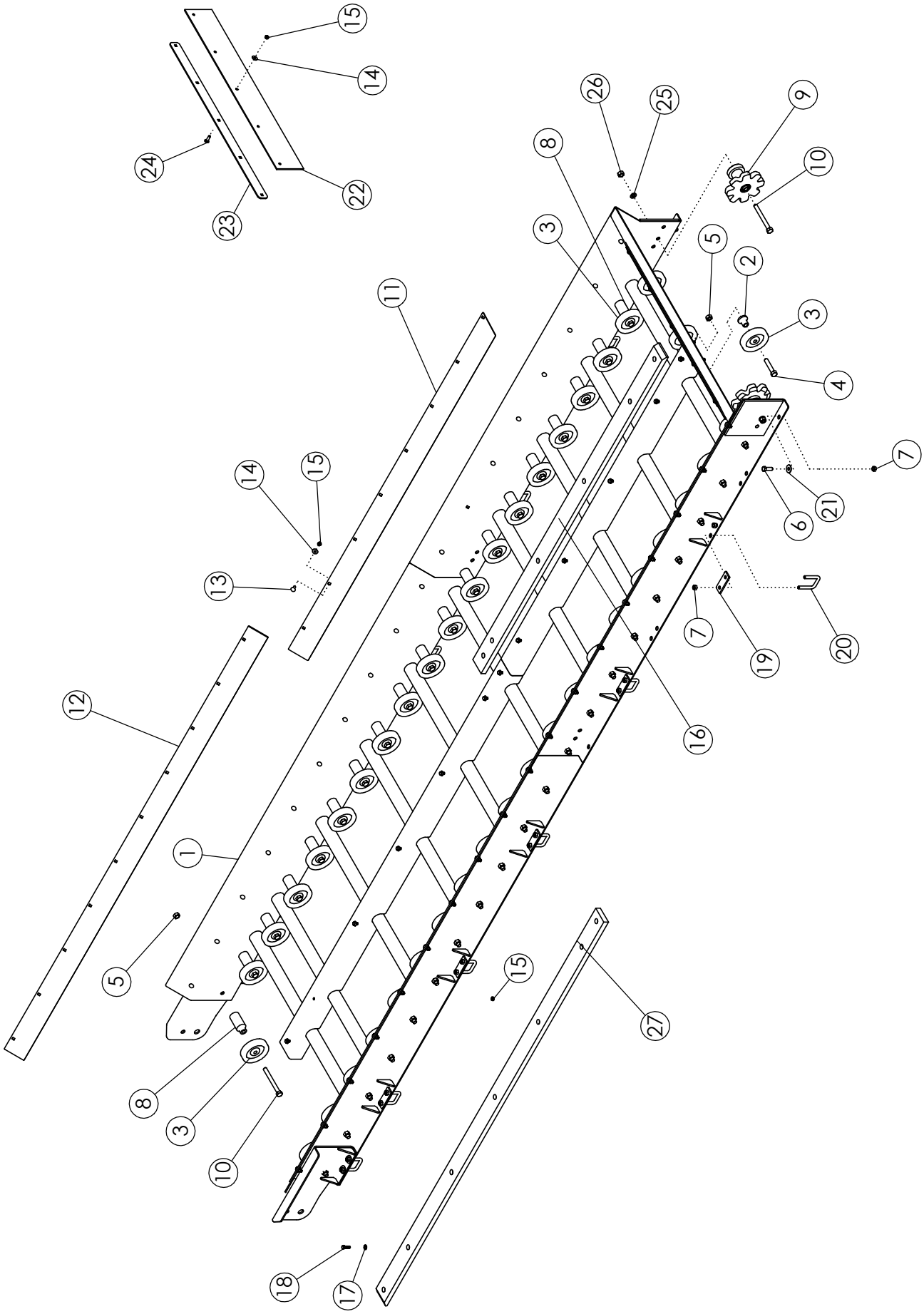
15
14
24
23
22
26
25
9
8
10
3
5
2
11
3
4
7
14
15
21
6
13
7
19
20
12
16
1
5
15
27
8
3
10
18
17

ELEVATOR ASSEMBLY

ITEM	PART NO.	DESCRIPTION	QTY
1	301686	WLDMT-ELEVATOR 12R EXT	1
2	58971	STAND OFF 1.50"	2
3	53825	BOGIE WHEEL 5"	42
4	65825	BOLT-HEX: .63 X 3.25 NC GR5 ZP	2
5	1016595	NUT-TOPLOCK: .63 NC GR5 ZP	42
6	1011607	BOLT-HEX: .50 x 1.50 NC GR5 ZP	2
7	1027461	NUT-TOPLOCK: .50 NC GR5 ZP	26
8	64192	STAND OFF 4 INCH	40
9	54824	SPROCKET-IDLER 56MM	2
	63813	SPROCKET-IDLER 50MM 10T	
10	1013068	BOLT-HEX: .63 X 6.00 NC GR5 ZP	42
11	72337	PLATE-BELT PROTECTOR LOWER	2
12	301690	PLATE-BELT PROTECTOR UPPER 12R EXT	2
13	59488	BOLT-CRG: .38 X 1.00 NC GR5 ZP	42
14	1011828	WASHER-FLAT .38 ZP	42
15	1016999	NUT-TOPLOCK: .38 NC GR5 ZP	49
16	69822	SLIDE-ELEVATOR PLASTIC 6R/8R/12R	1
17	1014608	WASHER-FLT: SAE .38 ZP	12
18	1011601	BOLT-HEX: .38 X 1.25 NC GR5 ZP	12
19	64748	PLATE-ELEVATOR BACKING	10
20	65658	U-BOLT: .50 X 3 X 2.06 X 3	12
21	1014443	WASHER-FLAT: .50 ZP	6
22	64609	FLAP-RUBBER ELEVATOR	1
23	64608	STRIP-BOLTING	1
24	1016362	BOLT-CRG: .38 X 1.25 NC GR5 ZP	5
25	1011813	WASHER-LOCK: .63 ZP	2
26	1011578	NUT-HEX: .63 NC GR2 ZP	2
27	301689	SLIDE-ELEVATOR PLASTIC 12R EXT	1
28	301697	BELT-56MM ELEVATOR 12R (NOT SHOWN)	1
	301798	BELT-50MM ELEVATOR 12R	
	301698	BELT- 56MM ELEVATOR 12R DOUBLE	
	301799	BELT- 50MM ELEVATOR 12R DOUBLE	

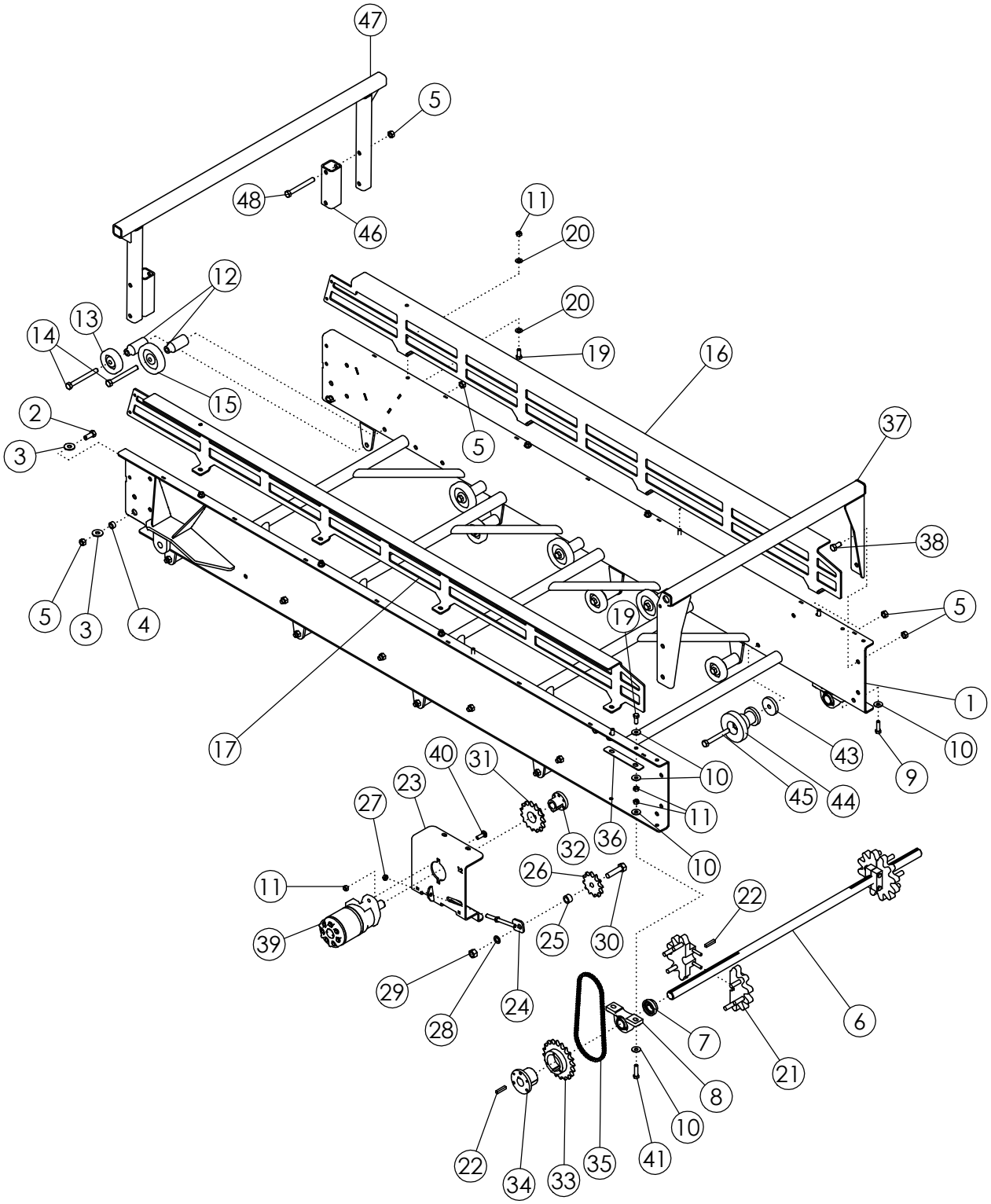
47
5
48
46
11
20
12
20
13
14
19
16
15
2
5
37
3
38
5
3
4
19
5
1
17
43
10
40
31
10
9
23
45
44
27
11
32
36
10
26
11
22
39
25
30
29
24
6
28
7
21
8
10
22
34
33
35
41

ELEVATOR BOOM

ITEM	PART NO.	DESCRIPTION	QTY
1	72756	WLDMT-ELEVATOR BOOM 12R	1
2	1014349	BOLT-HEX: .63 X 1.50 NC GR5 ZP	2
3	1013024	WASHER-FLAT: .63 ZP	4
4	53449	SLEEVE-HINGE	2
5	1016595	NUT-TOPLOCK: .63 NC GR5 ZP	24
6	68650	SHAFT - DRIVE	1
7	52382	SEAL PROTECTOR	2
8	52405	PILLOW BLOCK BEARING 1.75	2
9	1011608	BOLT-HEX: .50 X 1.75 NC GR5 ZP	2
10	1014443	WASHER-FLAT: .50 ZP	8
11	1027461	NUT-TOPLOCK: .50 NC GR5 ZP	16
12	64192	STAND OFF	16
13	53854	BOGIE WHEEL 4"	8
14	1013068	BOLT-HEX: .63 X 6.00 NC GR5 ZP	16
15	53825	BOGIE WHEEL 5"	8
16	300738	PLATE-BOOM EXT LONG FRONT	1
17	300737	PLATE-BOOM EXT LONG REAR	1
18	54803	CROSS BRACE-BOOM	1
19	1011606	BOLT-HEX: .50 X 1.25 NC GR5 ZP	14
20	1011584	WASHER-FLAT: SAE .50 ZP	20
21	68659	SPROCKET-SPLIT 50MM 12T Ø1.75	2
	68658	SPROCKET-SPLIT 56MM 10T Ø1.75	
	301521	SPROCKET-SPLIT 50MM 12T Ø1.750 DOUBLE BELT	
	301522	SPROCKET-SPLIT 56MM 10T Ø1.750 DOUBLE BELT	
22	50152	KEY .38 X .38 X 2.00	3
23	72329	WLDMT-REDUCTION MOUNT REAR	1
24	63876	TENSIONER ZP	1
25	58086	SPACER-CHAIN IDLER ZP	1
26	56334	SPROCKET-IDLER 8012	1
27	1011591	NUT-JAM: .50 NC ZP	2
28	1012061	WASHER-LOCK: .75 ZP	1
29	1011620	NUT-HEX: .75 NC GR2 ZP	1
30	1012059	BOLT-HEX: .75 X 3.00 NC GR5 ZP	1
31	64155	SPROCKET H80-P15	1
32	53719	HUB P1 1-1/4" (WITH KEY)	1
33	56650	SPROCKET H80-Q20	1
34	50335	HUB Q1 1.75"	1
35	302940	CHAIN-ROLLER 80H-1R-038 CP	1
36	64732	PLATE-SHIM	1
37	64578	WLDMT-BOOM END SUPPORT	1
38	1032509	BOLT-HEX .63 X 1.25 NC GR5 ZP	4
39	57686	MOTOR-HYDRAULIC 32.3IN^3/REV	1
	57880	SEAL KIT FOR 57686	

CONTINUED

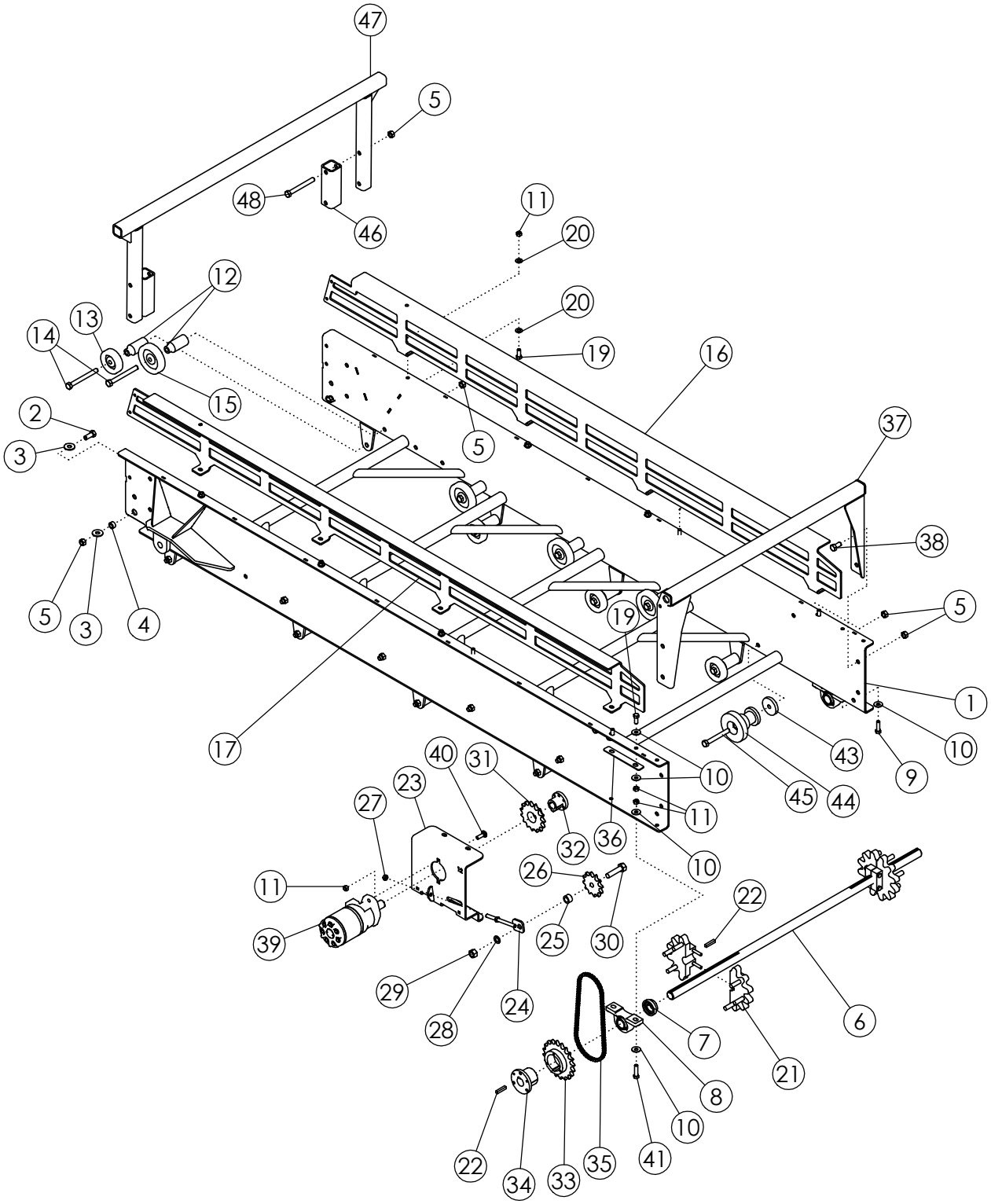
47
5
48
46
11
20
12
20
13
14
19
16
15
2
5
37
3
38
5
3
4
19
5
1
17
43
10
40
31
10
9
23
45
44
27
11
32
36
10
26
11
22
39
25
30
29
24
6
28
7
21
8
10
22
34
33
35
41

ELEVATOR BOOM (CONTINUED)			
ITEM	**PART NO.**	**DESCRIPTION**	**QTY**
40	1011660	BOLT-CRG: .50 X 1.50 NC GR5 ZP	2
41	1017708	BOLT-HEX: .50 X 2.25 NC GR5 ZP	2
42	64675	LINK-OFFSET (NOT SHOWN)	2
43	62932	PLATE-SHIM	2
44	68664	ROLLER-STEP 5"	2
45	1013935	BOLT-HEX: .63 X 4.50 NC GR5 ZP	2
46	73295	TUBE-BOOM SUPPORT SPACER	2
47	73291	WLDMT-BOOM SUPPORT	1
48	1016292	BOLT-HEX .63 X 5.50 NC GR5 ZP	2

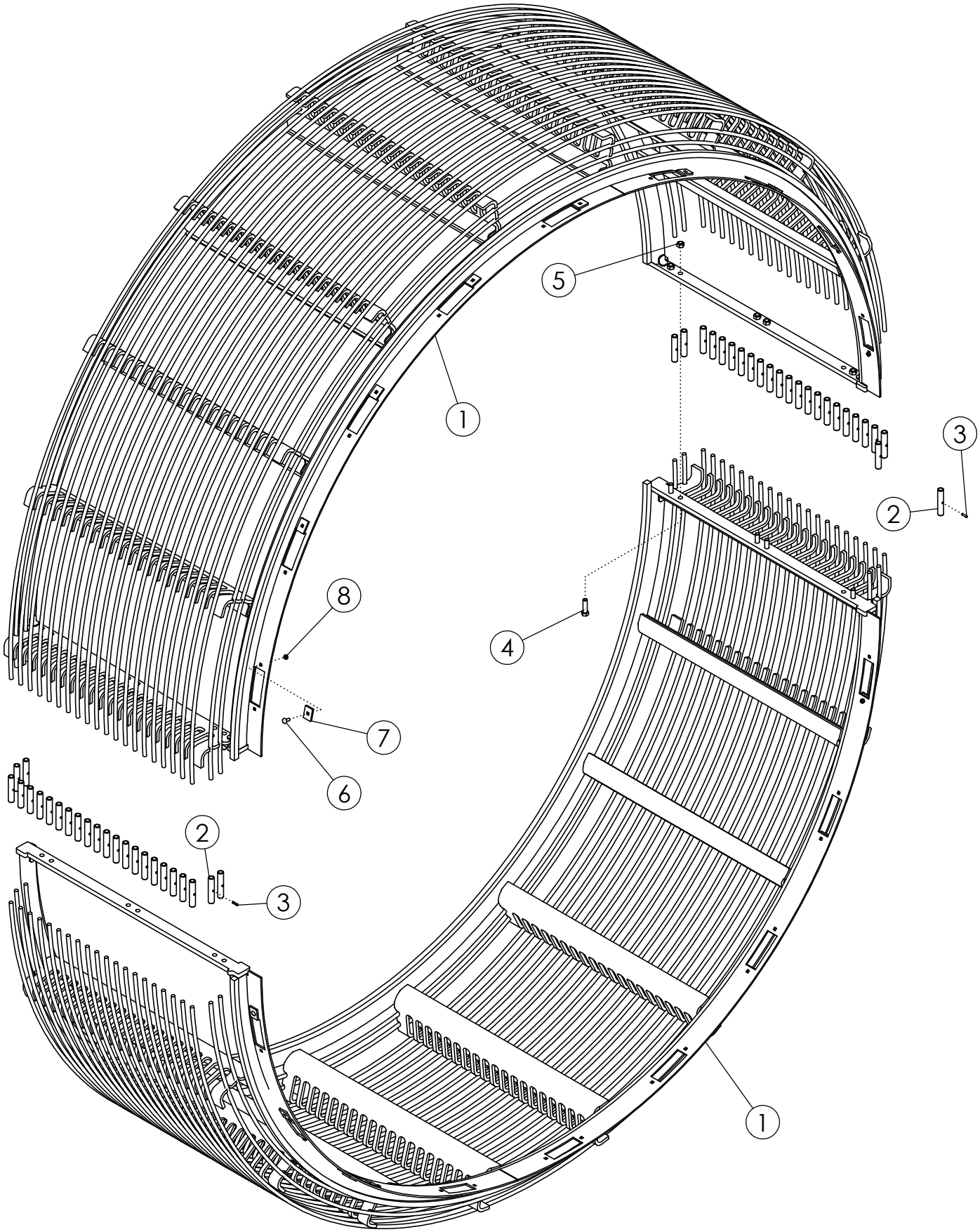
5
1
3
2
8
4
7
6
2
3
1

WHEEL ASSEMBLY

ITEM	PART NO.	DESCRIPTION	QTY
1	300115	WLDMT-WHEEL HALF 12R	2
2	59410	TUBE-COUPLER ZP	48
3	1030795	PIN-ROLL: .25 X 1.00 ZP	48
4	1024447	BOLT-HEX: .63 X 2.75 NC GR5 ZP	12
5	1016595	NUT-TOPLOCK: .63 NC GR5 ZP	12
6	59488	BOLT-CRG: .38 X 1.00 NC GR5 ZP	36
7	59485	TAB-WHEEL DRIVE	36
8	1016999	NUT-TOPLOCK: .38 NC GR5 ZP	36

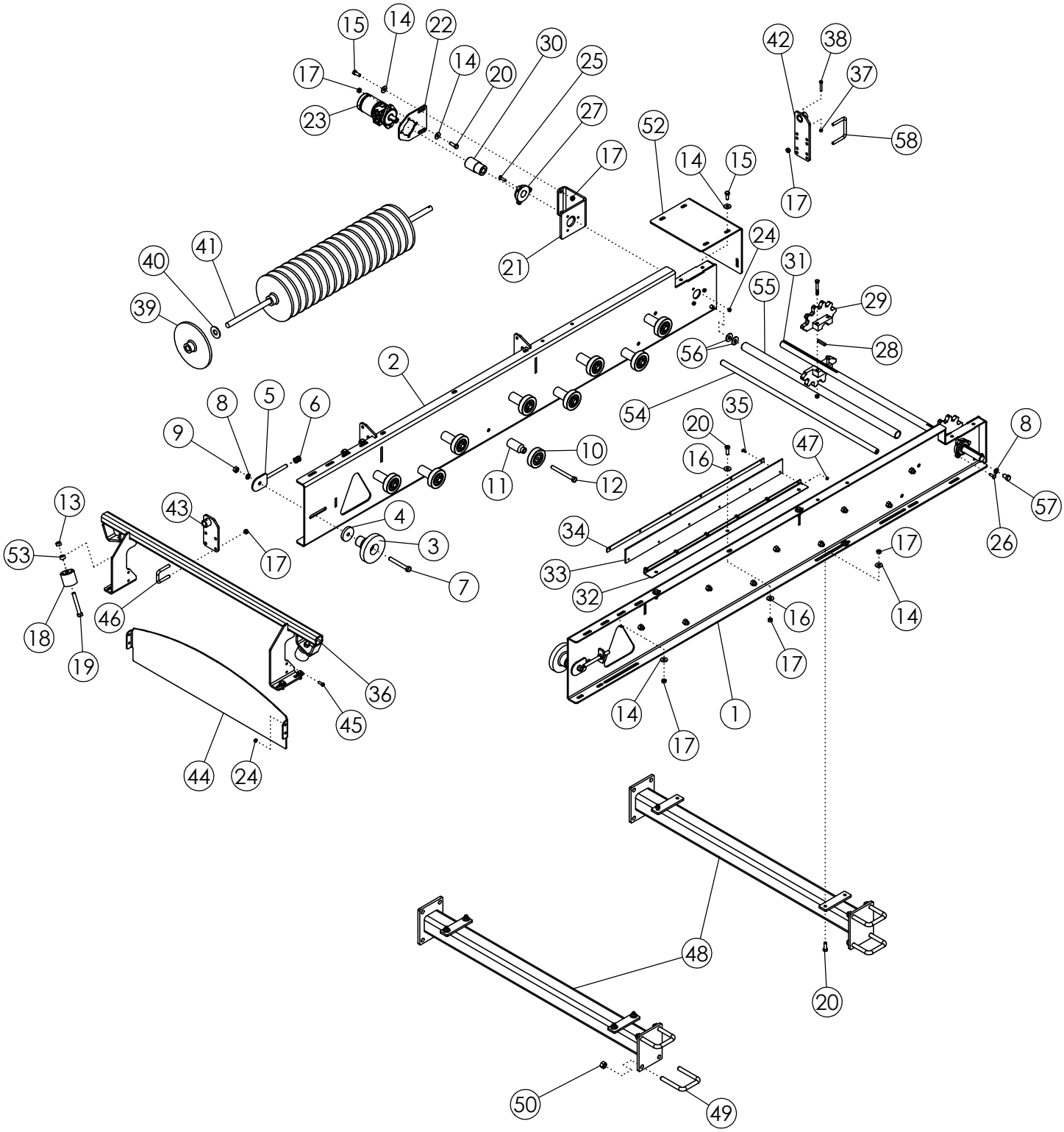
15
14
22
30
25
17
14
20
23
27
17
21
52
14
15
42
38
37
58
17
24
31
55
29
28
56
54
40
41
39
2
8
5
6
9
10
11
12
20
35
16
47
8
57
26
13
43
4
3
7
17
53
34
33
32
17
16
14
17
18
19
46
36
45
44
24
14
17
1
48
20
50
49

WHEEL CONVEYOR

ITEM	PART NO.	DESCRIPTION	QTY
1	73667	WLDMT-CONVEYOR RH 12R	1
2	73668	WLMDT-CONVEYOR LH 12R	1
3	54042	ROLLER-STEP 6"	2
4	62932	PLATE-SHIM .50 ZP	2
5	59711	TIGHTENER BOLT ZP	2
6	1026259	NUT-JAM: .63 NC GR2 ZP	4
7	1013816	BOLT-HEX: .63 X 5.00 NC GR5 ZP	2
8	1011813	WASHER-LOCK: .63 ZP	4
9	1011578	NUT-HEX: .63 NC GR2 ZP	2
10	53854	BOGIE WHEEL 4"	18
11	64192	STAND OFF	18
12	1013068	BOLT-HEX: .63 X 6.00 NC GR5 ZP	18
13	1016595	NUT-TOPLOCK: .63 NC GR5 ZP	20
14	1011584	WASHER-FLAT: SAE .50 ZP	12
15	1011606	BOLT-HEX: .50 X 1.25 NC GR5 ZP	10
16	1014443	WASHER-FLAT: .50 ZP	19
17	1027461	NUT-TOPLOCK: .50 NC GR5 ZP	35
18	59454	IDLER ROLLER	2
19	1014000	BOLT-HEX: .63 X 3.50 NC GR5 ZP	4
20	1011607	BOLT-HEX: .50 X 1.50 NC GR5 ZP	13
21	62914	BRACKET-MOTOR MOUNT	1
22	57843	PLATE-MOTOR HYDRAULIC	1
23	59449	MOTOR-HYDRAULIC 20 IN^3/REV	1
	57881	SEAL KIT FOR 59449	
24	1016999	NUT-TOPLOCK: .38 NC GR5 ZP	10
25	58679	BOLT-CRG: .38 X 1.50 NC GR5 ZP	3
26	1016362	BOLT-CRG: .38 X 1.25 NC GR5 ZP	3
27	53662	BEARING-FLANGE 1-7/16"	2
28	50152	KEY .38 X .38 X 2.00	2
29	53712	SPROCKET-SPLIT 45MM	2
30	52867	COUPLING	1
31	53392	SHAFT - DRIVE	1
32	301287	PLATE-CONVEYOR EXT 12R	1
33	301289	FLAP-CONVEYOR BELT 12R	1
34	301288	BRACKET-BOLTING RUBBER 12R	1
35	68602	BOLT-CRG: .25 X .75 NC GR5 ZP	6
36	59702	WLDMT-ROLLER MOUNT REAR	1
37	1030700	NUT-TOPLOCK: .31 NC GR5 ZP	1
38	1011285	BOLT-HEX: .31 X 2.00 NC	1
39	52876	KNOCKOUT WHEEL	19
40	1020685	WASHER-FLAT: 1.00	20

CONTINUED

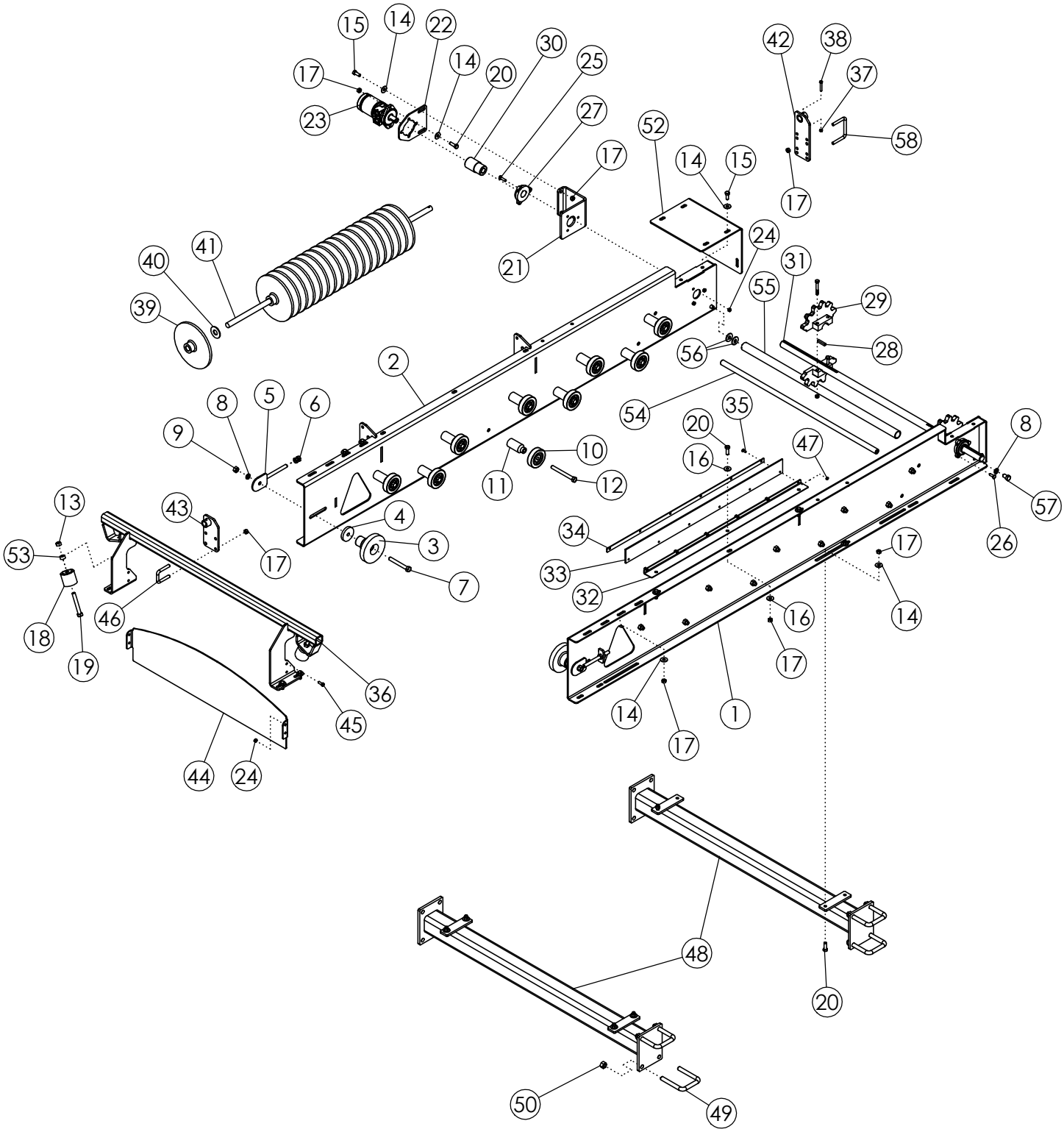
15
14
22
30
25
17
14
20
23
27
17
21
52
14
15
42
38
37
58
17
24
31
55
29
28
56
54
40
41
39
2
8
5
6
9
10
11
12
20
35
16
47
8
57
26
13
43
4
3
7
17
53
34
33
32
17
16
14
17
18
19
46
36
45
44
24
1
14
17
48
20
50
49

WHEEL CONVEYOR (CONTINUED)			
ITEM	**PART NO.**	**DESCRIPTION**	**QTY**
41	73528	SHAFT-KNOCKOUT WHEEL 12R	1
42	301275	WLDMT-KNOCKOUT BRACKET FRONT	1
43	59725	WLDMT-KNOCKOUT BRACKET REAR	1
44	64918	SHIELD-UPPER	1
45	1011600	BOLT-HEX: .38 X 1.00 NC GR5 ZP	4
46	65658	U-BOLT: .50 X 3 X 2.06 X 3	4
47	1030946	NUT-TOPLOCK: .25 NC GR5 ZP	6
48	73542	WLDMT-HORIZONTAL SUPPORT	2
49	65274	U-BOLT: .750 X 5.50 X 4.063 X 5.50	8
50	1017000	NUT-TOPLOCK: .75 NC GR5 ZP	16
51	73518	BELT-45MM WHEEL CONVEYOR 12R (NOT SHOWN)	1
52	301326	FLANGE-CONVEYOR EXT SHIELD	1
53	53449	SLEEVE-HINGE	2
54	56754	ROD-THREADED	1
55	56773	PIPE-PLASTIC	1
56	1013024	WASHER-FLAT: .63 ZP	4
57	1032509	BOLT-HEX: .63 X 1.25 NC GR5 ZP	2
58	54653	U-BOLT: .500 X 3.25 X 4.00 X 3.25	2

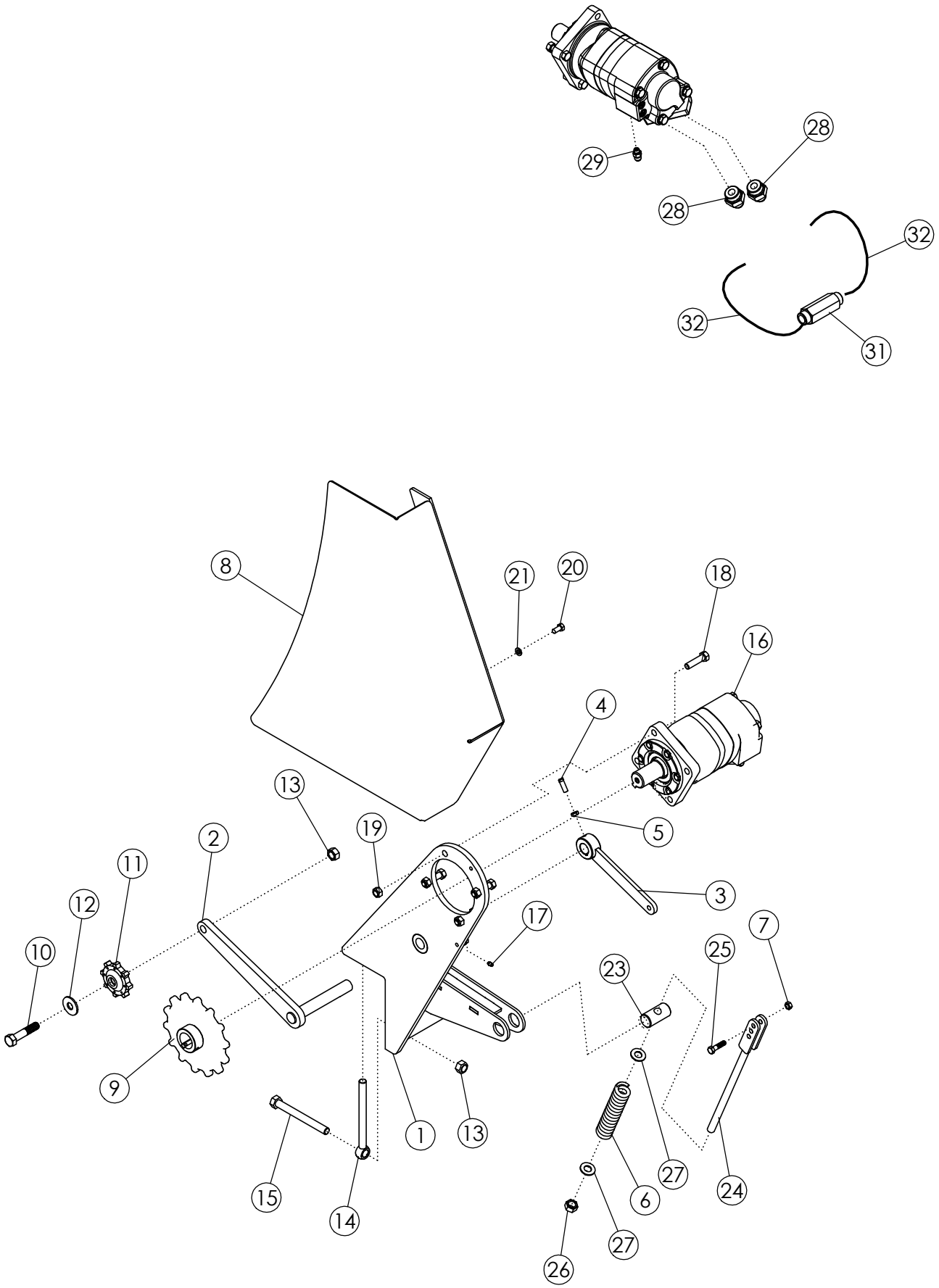
29
28
28
32
32
31
8
21
20
18
16
4
13
19
5
2
11
3
12
17
7
10
25
23
9
1
13
27
6
24
15
14
27
26

WHEEL DRIVE

ITEM	PART NO.	DESCRIPTION	QTY
1	300190	WLDMT-MOTOR MOUNT	1
2	59624	WLDMT-IDLER ARM	1
3	50718	ARM-ZP	1
4	50813	SCREW-SET: SQ HD .38 X 1.00 ZP	1
5	1013519	NUT-JAM: .38 NC GR2 ZP	1
6	64915	SPRING	1
7	1016999	NUT-TOPLOCK: .38 NC GR5 ZP	1
8	300193	WLDMT-CHAIN GUARD 12R	1
9	300195	WLDMT-SPROCKET 12R	1
10	1011624	BOLT-HEX: .63 X 3.00 NC GR5 ZP	1
11	59629	SPROCKET-IDLER	1
12	1013024	WASHER-FLAT: .63 ZP	1
13	1016595	NUT-TOPLOCK: .63 NC GR5 ZP	5
14	53195	EYEBOLT: .63 X 7.50 ZP	2
15	1013068	BOLT-HEX: .63 X 6.00 NC GR5 ZP	2
16	300143	MOTOR-HYDRAULIC 24IN^3/REV	1
	301041	SEAL KIT FOR 300143	
17	1011748	ZERK - GREASE	1
18	1011609	BOLT-HEX: .50 X 2.00 NC GR5 ZP	4
19	1027461	NUT-TOPLOCK: .50 NC GR5 ZP	4
20	1011599	BOLT-HEX: .38 X 0.75 NC GR5 ZP	2
21	1011586	WASHER-LOCK: .38 ZP	2
22	59625	CHAIN-WHEEL DRIVE (NOT SHOWN)	1
23	64914	SHAFT-PIVOT	1
24	64913	SHAFT-ZP	1
25	1011602	BOLT-HEX: .38 X 1.50 NC GR5 ZP	1
26	1013302	NUT-NYLOCK: .63 NC GR2 ZP	1
27	1013004	WASHER-FLAT: SAE .63 ZP	2
28	58982	FTG-ADAPTER: 16MB-12MJ	2
29	300245	FTG-ADAPTER: 4MB-6MJ	1
30	59888	FTG-TEE: 12MJ-12FJX-12MJ	2
31	68179	FTG-ADAPTER: 8MB-8FJX	1
32	68437	HOSE: .50 X 014 12FJX-12FJX	2

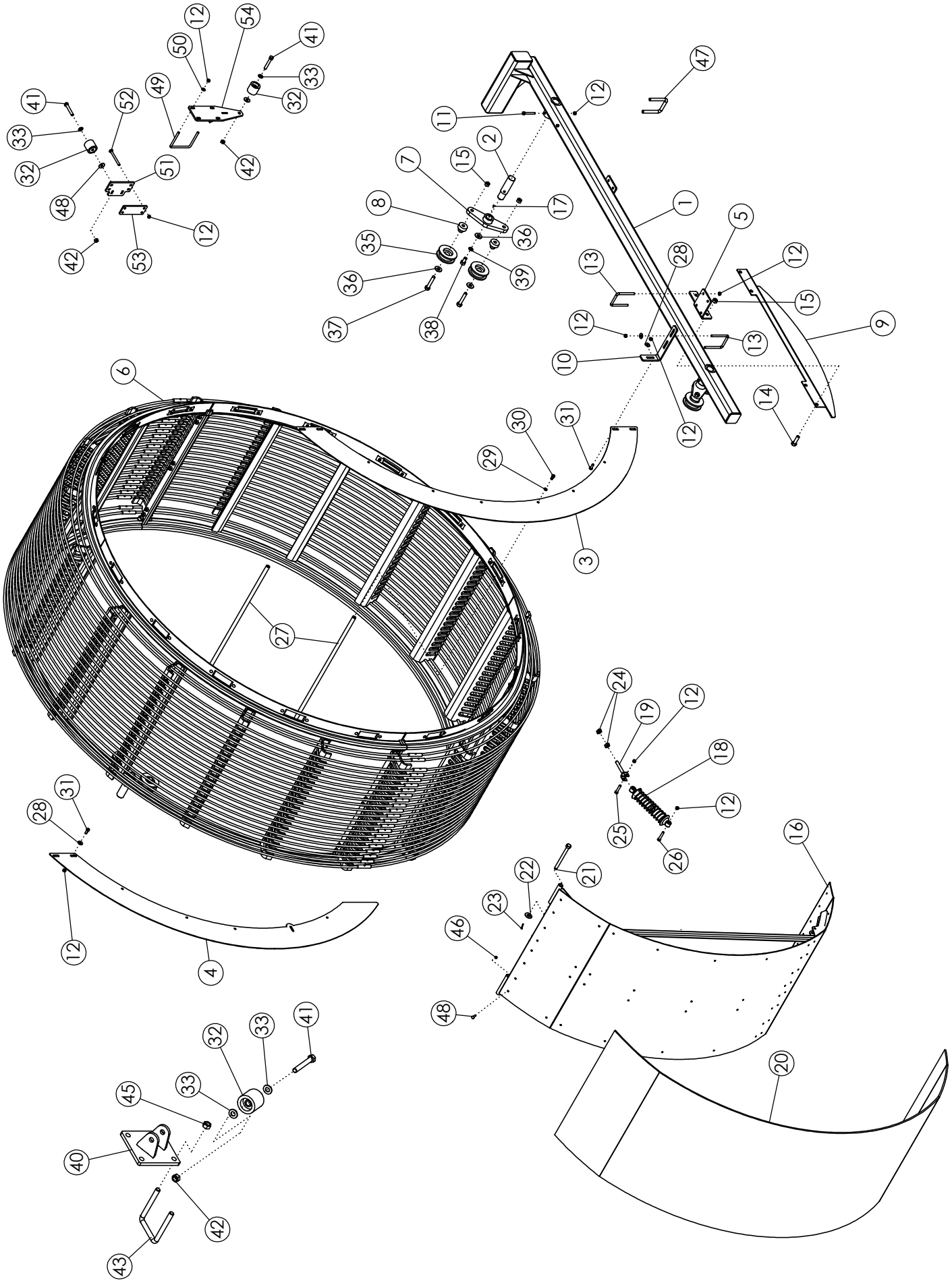
1
2
3
4
5
6
7
8
9
10
11
12
13
14
15
16
17
18
19
20
21
22
23
24
25
26
27
28
29
30
31
32
33
35
36
37
38
39
40
41
42
43
45
46
47
48
49
50
51
52
53
54

FRAME EXTENSION

ITEM	PART NO.	DESCRIPTION	QTY
1	300185	WLDMT-REAR MOUNT	1
2	58726	SHAFT-MOUNT ROLLER	2
3	59461	SHIELD-SHOE	1
4	300199	SHIELD-SHOE SHORT	1
5	73571	PLATE-DEFLECTOR SHIELD SUPPORT	2
6	300113	ASSY-WHEEL 12R	1
7	59437	WLDMT-ROLLER MOUNT	2
8	58910	STAND-OFF-ROLLER	4
9	69624	PLATE-DEFLECTOR WHEEL	1
10	300198	PLATE-SHOE SHIELD BRACKET	1
11	1011612	BOLT-HEX: .50 X 3.50 GR5 ZP	2
12	1027461	NUT-TOPLOCK: .50 NC GR5 ZP	39
13	33856	U-BOLT: .50 X 5.50 X 4 X 5.50	5
14	1016598	BOLT- .75 X 2.50 NC GR5 ZP	4
15	1017000	NUT-TOPLOCK: .75 NC GR5 ZP	8
16	300024	WLDMT-SLIDE 12R	1
17	1011748	ZERK-GREASE: .25 UNF STRAIGHT	2
18	59637	SHOCK-COIL SPRING	3
19	59636	BOLT-CLEVIS ZP	3
20	73577	PLASTIC-SLIDE UHMW 12R	1
21	69148	PIN-BOLT W/COTTER	2
22	1030702	WASHER-FLAT .75 ZP	2
23	1030797	PIN-COTTER: .19 X 1.75 NP	2
24	1011827	NUT-JAM: .75 NC GR2 ZP	6
25	1011610	BOLT-HEX: .50 x 2.50 NC GR5 ZP	3
26	1016858	BOLT-HEX: .50 x 2.75 NC GR5 ZP	3
27	73572	ROD-SLIDE SUPPORT 12R	3
28	1014443	WASHER-FLAT: .50 ZP	7
29	1011581	WASHER-LOCK: .50 ZP	6
30	1011096	BOLT-HEX: .50 X 1.00 NC GR5 ZP	6
31	1011606	BOLT-HEX: .50 X 1.25 NC GR5 ZP	5
32	59454	IDLER ROLLER	6
33	1013004	WASHER-FLAT: SAE .63 ZP	12
34	58679	BOLT-CRG: .38 X 1.50 NC GR5 ZP	64
35	53681	ROLLER-FLANGE	4
36	1030702	WASHER-FLAT: .75 ZP	6
37	1011625	BOLT-HEX: .75 X 4.00 NC GR5 ZP	4
38	58367	BOLT-HEX: .75 X 1.50 NC GR5 ZP	2
39	1012061	WASHER-LOCK: .75 ZP	2

CONTINUED

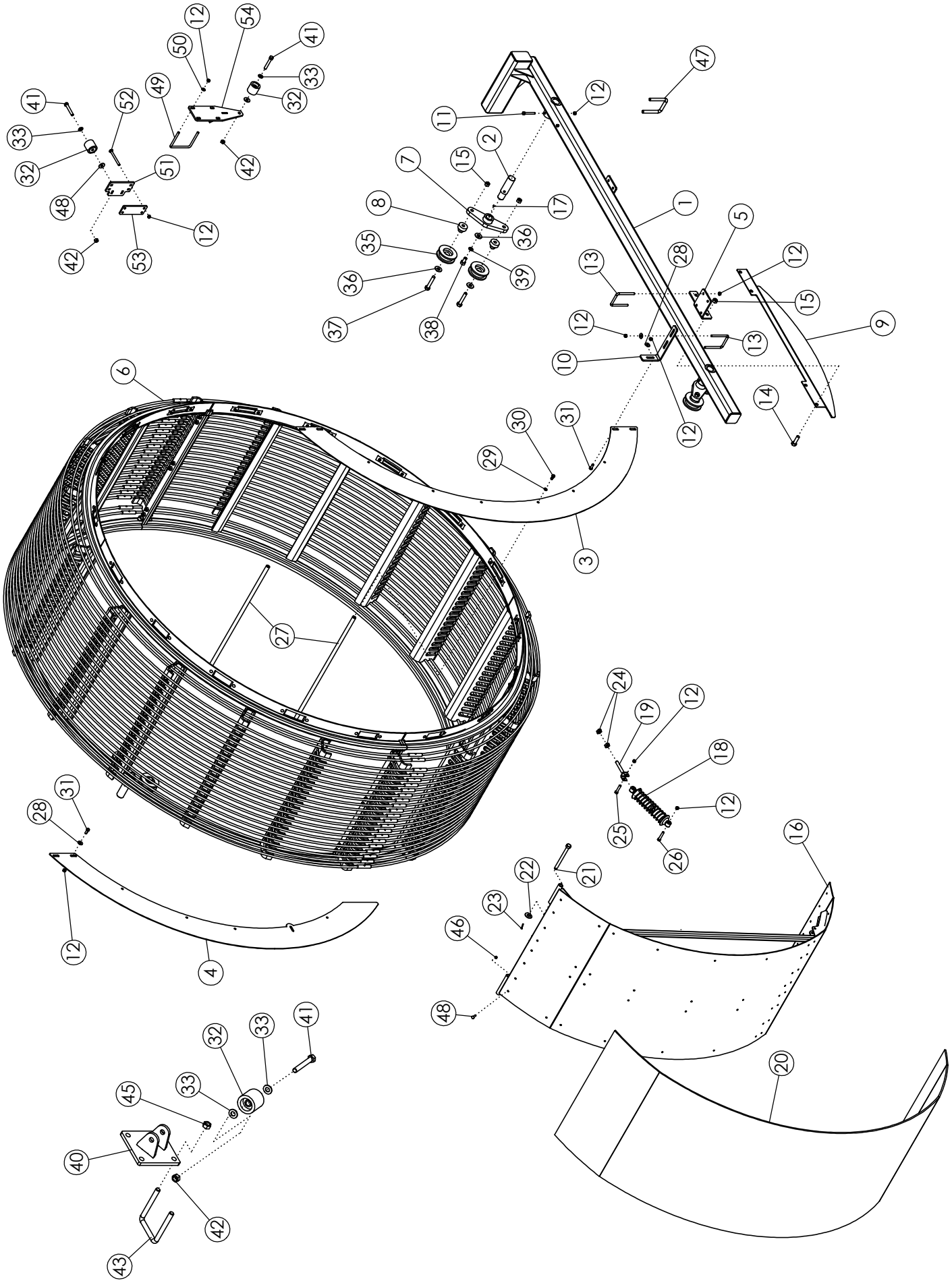
1
2
3
4
5
6
7
8
9
10
11
12
13
14
15
16
17
18
19
20
21
22
23
24
25
26
27
28
29
30
31
32
33
35
36
37
38
39
40
41
42
43
45
46
47
48
49
50
51
52
53
54

FRAME EXTENSION (CONTINUED)			
ITEM	**PART NO.**	**DESCRIPTION**	**QTY**
40	301348	WLDMT- ROLLER MOUNT 12R LH	1
41	1016726	BOLT-HEX: .63 X 4.00 NC GR5 ZP	6
42	1016595	NUT-TOPLOCK: .63 NC GR5 ZP	6
43	66631	U-BOLT: .625 X 5.50 X 4 X 5.50	4
44	301351	WLDMT- ROLLER MOUNT 12R RH (NOT SHOWN)	1
45	1016999	NUT-TOPLOCK: .38 NC GR5 ZP	64
46	1011578	NUT-HEX: .63 NC GR2 ZP	8
47	65274	U-BOLT: .750 X 5.50 X 4.06 X 5.50	4
48	1013024	WASHER-FLAT: .63 ZP	4
49	34085	U-BOLT: .500 X 5.50 X 6.00 X 5.50	4
50	1011584	WASHER-FLAT: SAE .50 ZP	8
51	302526	WLDMT-OUTSIDE ROLLER	2
52	311348	BOLT-CRG: .50 X 5.50 NC GR5 ZP	8
53	302523	PLATE-BOLTING BAR	2
54	302525	WLDMT- DROPDOWN ROLLER	2

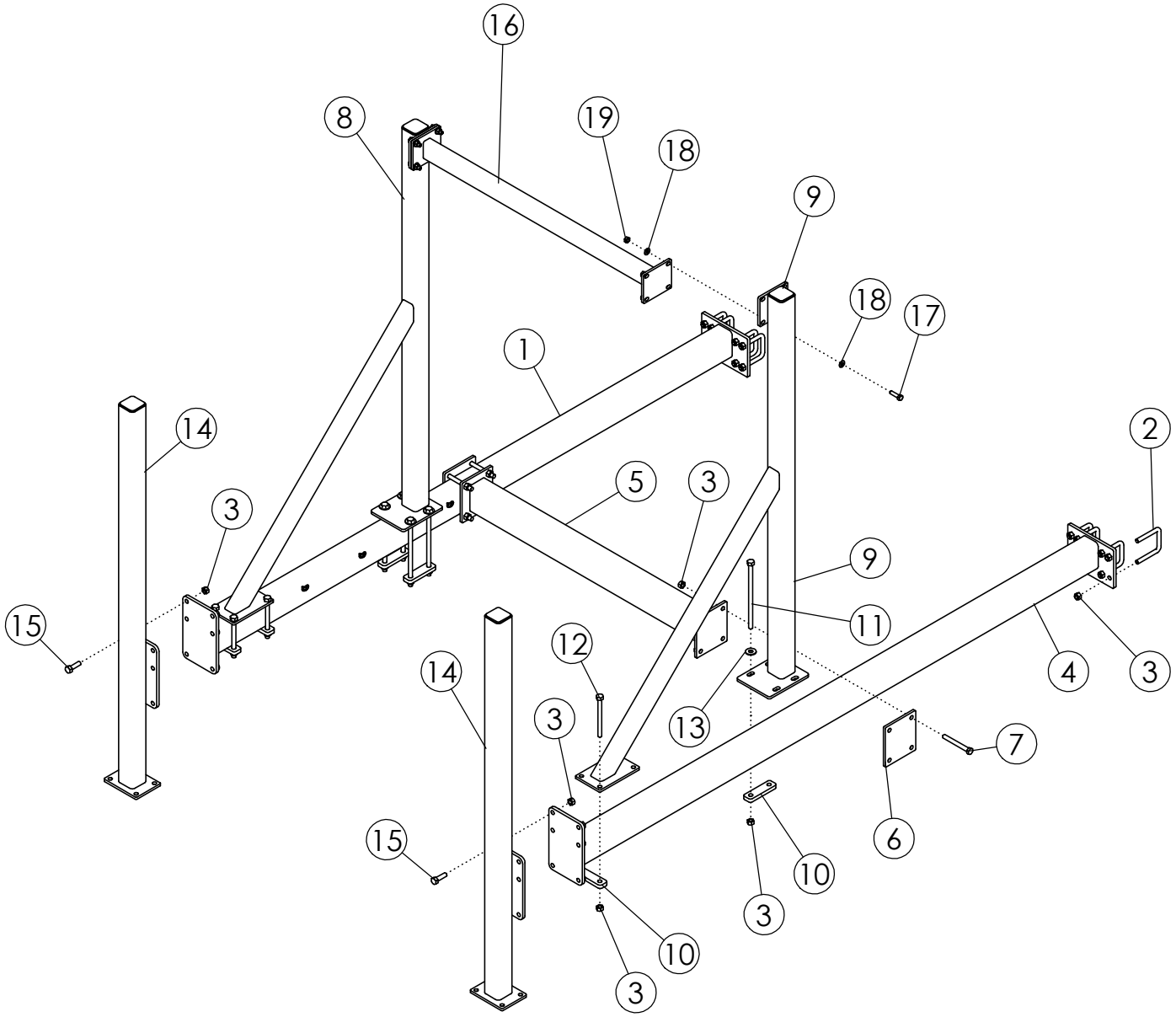
16
8
19
18
9
18
17
1
14
2
5
3
3
9
11
15
12
14
4
3
3
13
7
6
15
10
3
10
3

REAR WHEEL FRAME ASSEMBLY

ITEM	PART NO.	DESCRIPTION	QTY
1	300188	WLDMT-WHEEL SUPPORT LONG LH	1
2	65274	U-BOLT: .75 X 5.50 X 4.06 X 5.50	8
3	1017000	NUT-TOPLOCK: .75 NC GR5 ZP	52
4	300158	WLDMT-WHEEL SUPPORT LONG RH	1
5	300161	WLDMT-CENTER SUPPORT	1
6	300163	PLATE-BASE PC	2
7	1016718	BOLT-HEX: .75 X 6.50 NC GR5 ZP	8
8	301160	WLDMT-BUMPER A-FRAME LEFT	1
9	301156	WLDMT-BUMPER A-FRAME RIGHT	1
10	300168	BAR - BOLTING	8
11	301402	BOLT-HEX: .75 X 14.50 NC GR5 ZP	8
12	64136	BOLT-HEX: .75 X 8.50 NC GR5 ZP	8
13	1030702	WASHER-FLAT .75 ZP	8
14	73536	WLDMT-VERT REAR	2
15	1016598	BOLT- .75 X 2.50 NC GR5 ZP	12
16	301141	WLDMT-BUMPER CROSS TUBE	1
17	1017526	BOLT-HEX .63 X 2.25 NC GR5 ZP	8
18	1013004	WASHER-FLAT: SAE .63 ZP	16
19	1016595	NUT-TOPLOCK: .63 NC GR5 ZP	8

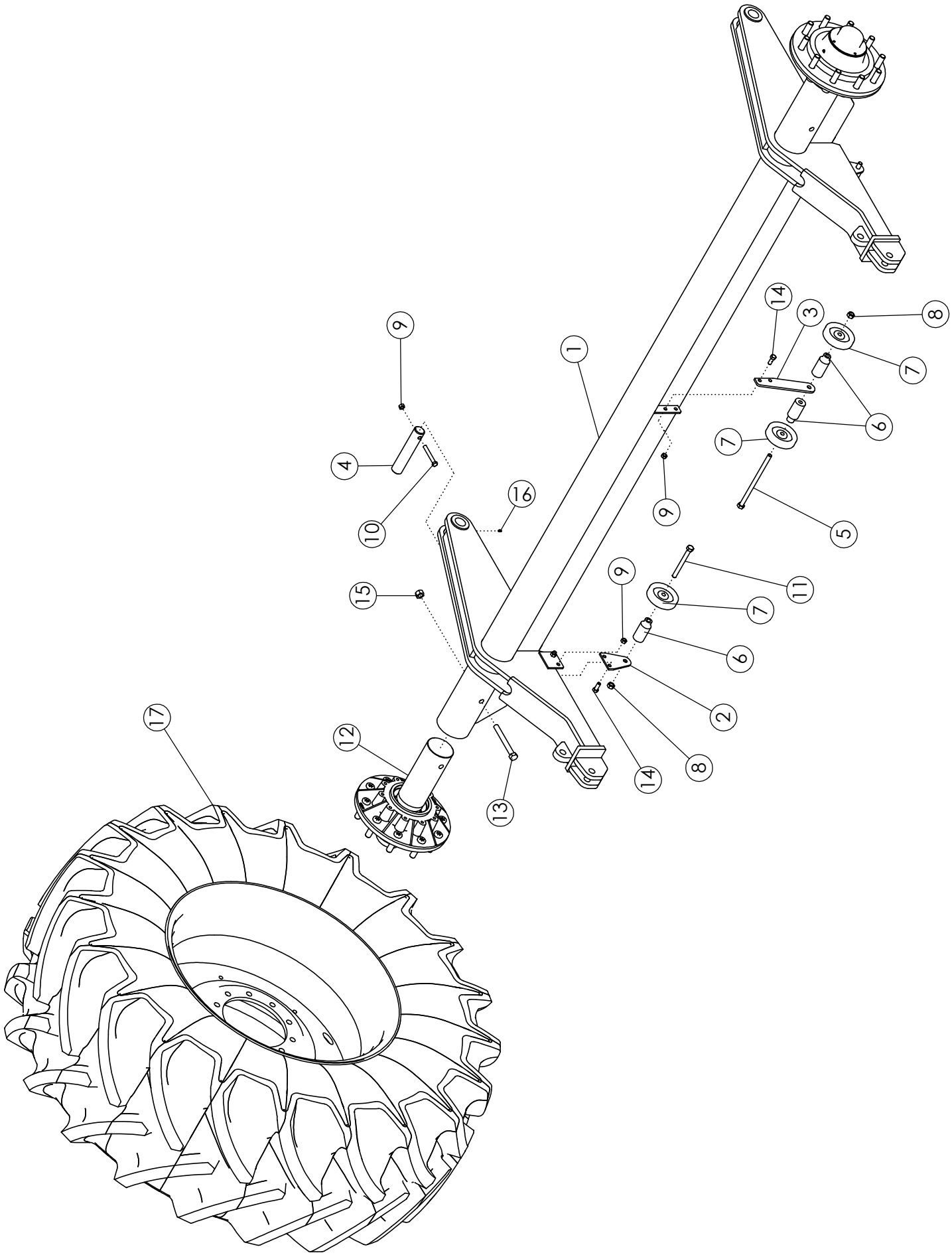
1
2
3
4
5
6
7
8
9
10
11
12
13
14
15
16
17

AXLE COMPONENTS			
ITEM	**PART NO.**	**DESCRIPTION**	**QTY**
1	72643	WLDMT-AXLE MAIN	1
2	72263	PLATE-BOGIE WHEEL	2
3	72827	PLATE-CENTER BOGIE	1
4	72311	PIN-AXLE MAIN	2
5	72773	BOLT-HEX: .63 X 11.00 NC GR5 ZP	1
6	64192	STAND OFF	4
7	53825	BOGIE WHEEL 5"	4
8	1016595	NUT-TOPLOCK: .63 NC GR5 ZP	3
9	1027461	NUT-TOPLOCK: .50 NC GR5 ZP	8
10	1029104	BOLT-HEX: .50 X 3.75 NC GR5 ZP	2
11	1013068	BOLT-HEX: .63 X 6.00 NC GR5 ZP	2
12	37309	ASSY-HUB/SPINDLE 5250	2
13	1016718	BOLT-HEX .75 X 6.50 NC GR5 ZP	2
14	1011606	BOLT-HEX: .50 X 1.25 NC GR5 ZP	6
15	1017000	NUT-TOPLOCK: .75 NC GR5 ZP	2
16	1011748	ZERK-GREASE: .25 UNF STRAIGHT	2
17	72644	TIRE-MNTD: 710/70R38 177A8 R1W LH	1
	72645	TIRE-MNTD: 710/70R38 177A8 R1W RH (NOT SHOWN	1
LARGE TIRE OPTION			
17	302012	TIRE-MNTD: 900/60R32 TRELL TM2000 181A8 LH	1
	302013	TIRE-MNTD: 900/60R32 TRELL TM2000 181A8 RH	1

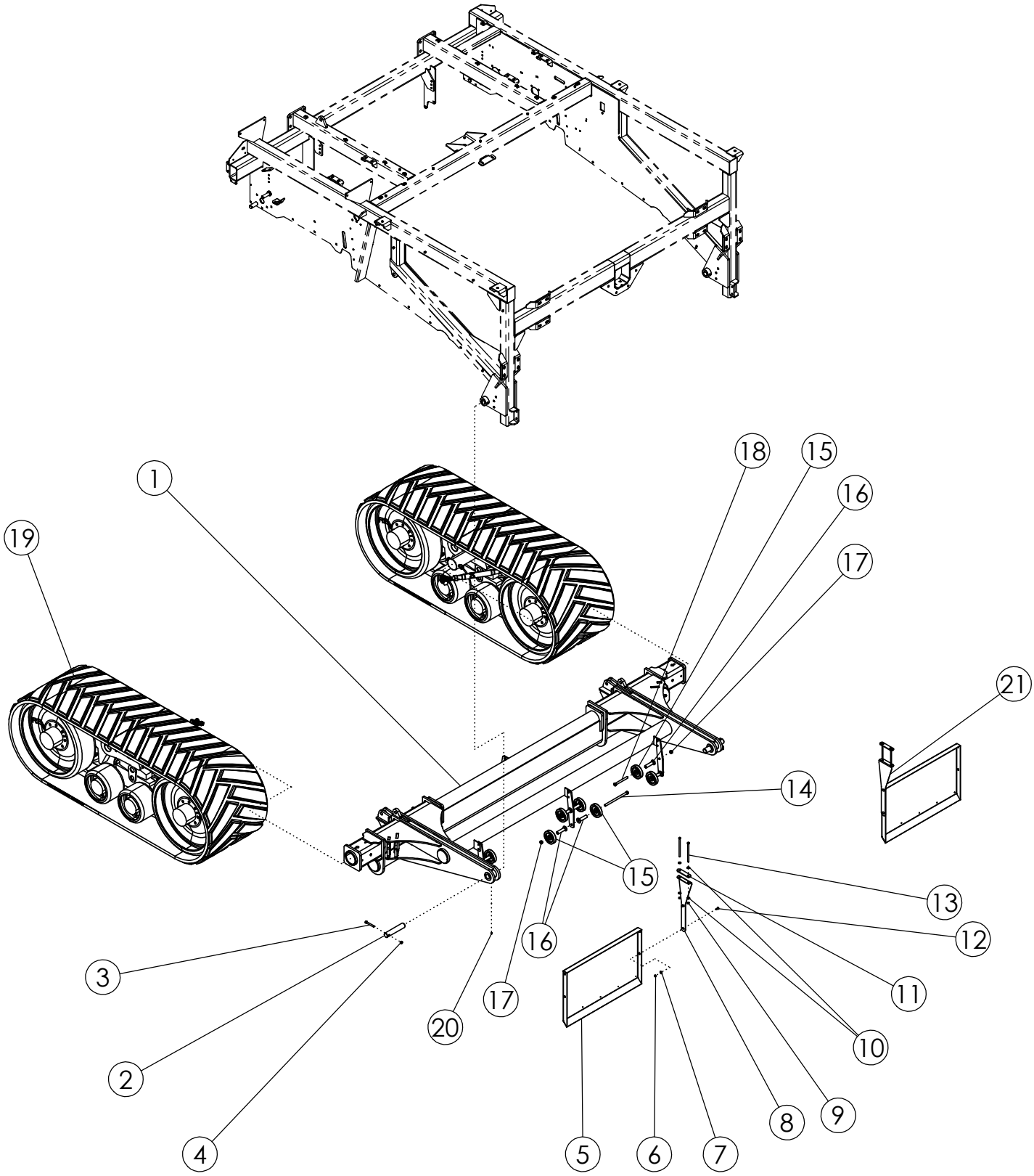
1
2
3
4
5
6
7
8
9
10
11
12
13
14
15
15
16
16
17
17
18
19
20
21

AXLE- TRACK FITUP

ITEM	PART NO.	DESCRIPTION	QTY
1	303219	WLDMT- 2700 TRACK AXLE	1
2	72311	PIN-AXLE MAIN	2
3	1029104	BOLT-HEX: .50 X 3.75 NC GR5 ZP	2
4	1027461	NUT-TOPLOCK: .50 NC GR5 ZP	2
5	303487	WLDMT-SHIELD EXTENSION 38"	2
6	1016999	NUT-TOPLOCK: .38 NC GR5 ZP	4
7	1011828	WASHER-FLAT: .38 ZP	4
8	303412	PLATE-SHIELD MOUNT LH	1
9	1016999	NUT-TOPLOCK: .38 NC GR5 ZP	4
10	1011828	WASHER-FLAT: .38 ZP	8
11	303484	PLATE-SHIELD MOUNT BOLT PLATE	2
12	59488	BOLT-CRG: .38 X 1.00 NC GR5 ZP	4
13	306980	BOLT-HEX: .38 X 8.0" NC GR5	4
14	72773	BOLT-HEX: .63 X11.00 NC GR5 ZP	3
15	53825	BOGIE WHEEL 5"	12
16	64192	STAND OFF- .625" X 4.0"	12
17	1016595	NUT-TOPLOCK: .63 NC GR5 ZP	9
18	1013068	BOLT-HEX: .63 X 6.00 NC GR5 ZP	6
19	354418	TRACK SYSTEM 30 X 67 70-3011GY1-0049	1
20	1011748	ZERK-GREASE: .25 UNF STRAIGHT	2
21	303488	PLATE-SHIELD MOUNT RH	1

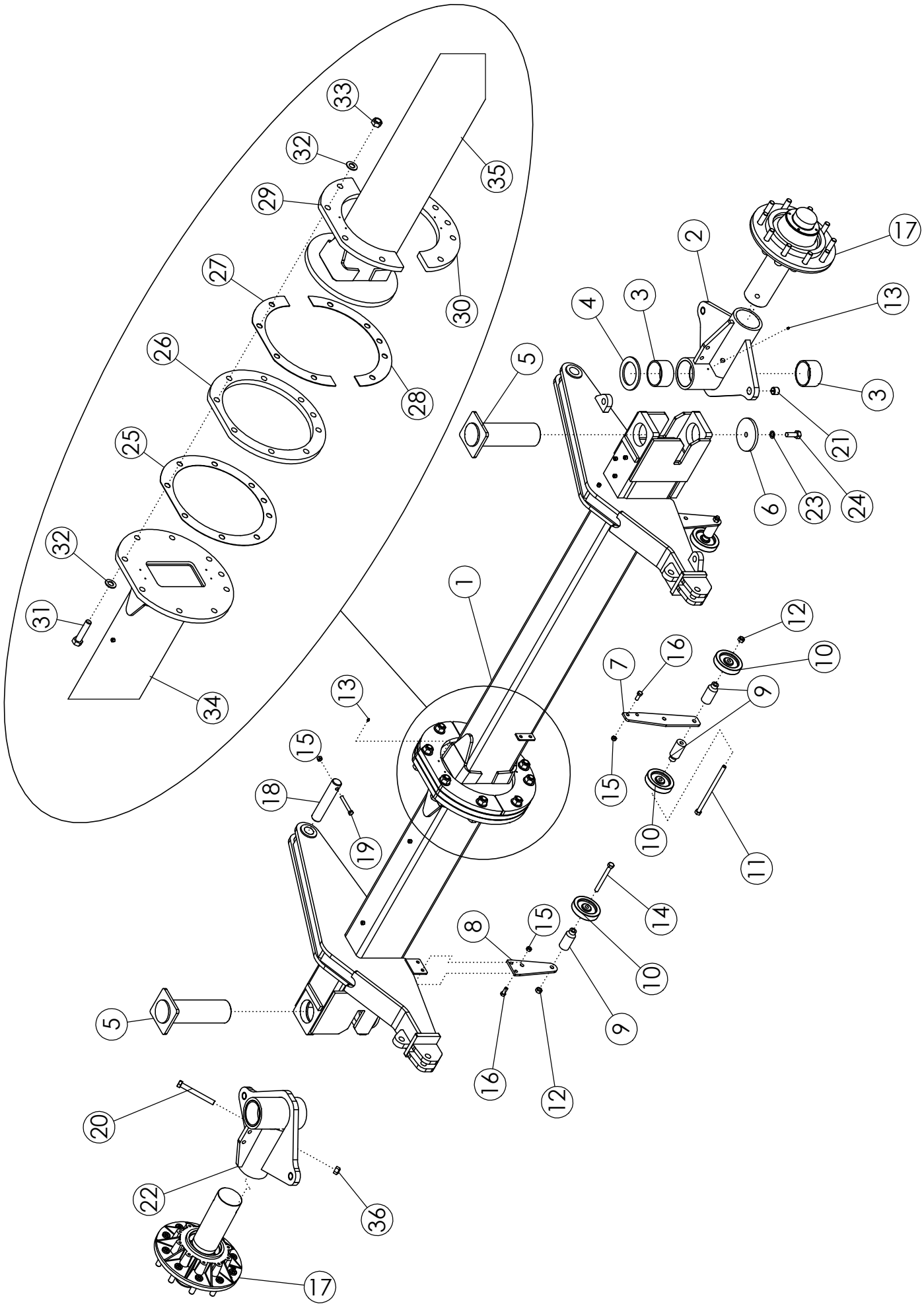
33
32
35
29
27
30
26
28
25
32
31
34
1
13
15
18
19
5
20
22
36
17
5
4
3
2
17
13
3
21
6
23
24
12
10
7
16
9
15
10
11
14
8
15
10
9
16
12

STEERABLE STRUT ASSEMBLY

ITEM	PART NO.	DESCRIPTION	QTY
1	301081	WLDMT-AXLE STEEARABLE ADC	1
2	73078	WLDMT-SPINDLE HOUSING	2
3	59205	BUSHING	4
4	73097	BEARING-CIRCULAR DISC	2
5	73092	WLDMT-KING PIN	2
6	73105	PLATE-KING PIN WASHER	2
7	301108	PLATE-CENTER BOGIE	1
8	301111	PLATE-BOGIE WHEEL	2
9	64192	STAND OFF	4
10	53825	BOGIE WHEEL 5"	4
11	72773	BOLT-HEX: .63 X 11.00 NC GR5 ZP	1
12	1016595	NUT-TOPLOCK: .63 NC GR5 ZP	3
13	1011748	ZERK-GREASE: .25 UNF STRAIGHT	8
14	1013068	BOLT-HEX: .63 X 6.00 NC GR5 ZP	2
15	1027461	NUT-TOPLOCK: .50 NC GR5 ZP	10
16	1011606	BOLT-HEX: .50 X 1.25 NC GR5 ZP	6
17	37309	ASSY-HUB AND SPINDLE	2
18	72311	PIN-AXLE MAIN	2
19	1029104	BOLT-HEX: .50 X 3.75 NC GR5 ZP	2
20	1016718	BOLT-HEX .75 X 6.50 NC GR5 ZP	2
21	45572	SPRING BUSHING 1.25 X 1.0 X1.0	4
22	301539	ASSY-SPINDLE HOUSING	2
23	1012061	WASHER-LOCK: .75 ZP	2
24	1012060	BOLT-HEX: .75 X 2.00 NC GR5 ZP	2
25	301094	PLATE-SHIM AXLE STEERABLE 14GA	1
26	301095	PLATE-SPACER AXLE STEERABLE 1.00"	1
27	301345	PLATE-SHIM AXLE STEERABLE 11GA TOP	1
28	301346	PLATE-SHIM AXLE STEERABLE 11GA BOTTOM	1
29	301096	PLATE-AXLE STEER BOLTING SPLIT TOP	1
30	301097	PLATE-AXLE STEER BOLTING SPLIT BOTTOM	1
31	1032288	BOLT-HEX: 1.0 x 4.50 NC GR8 ZP	9
32	1016663	WASHER-FLAT	18
33	1016969	NUT-TOPLOCK: 1.00 NC GR5 ZP	9
34	301125	WLDMT-AXLE STEERABLE SHORT LH ADC	1
35	301126	WLDMT-AXLE STEERABLE LONG RH ADC	1
36	1017000	NUT-TOPLOCK: .75 NC GR5 ZP	2

*ITEMS 2 AND 21 INCLUDED WITH ITEM 22

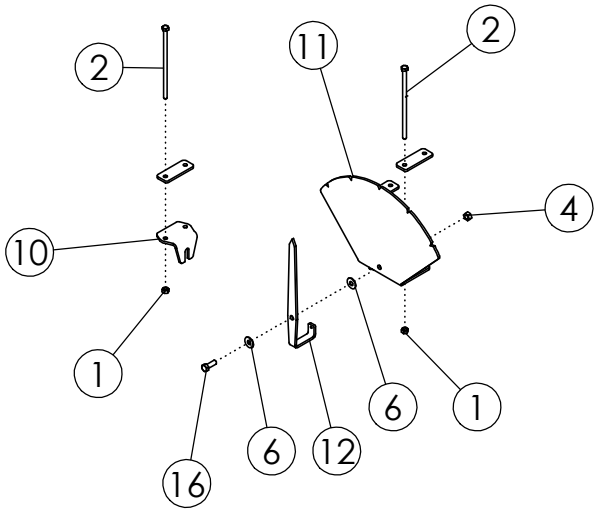
2
11
2
4
10
1
1
6
6
12
16

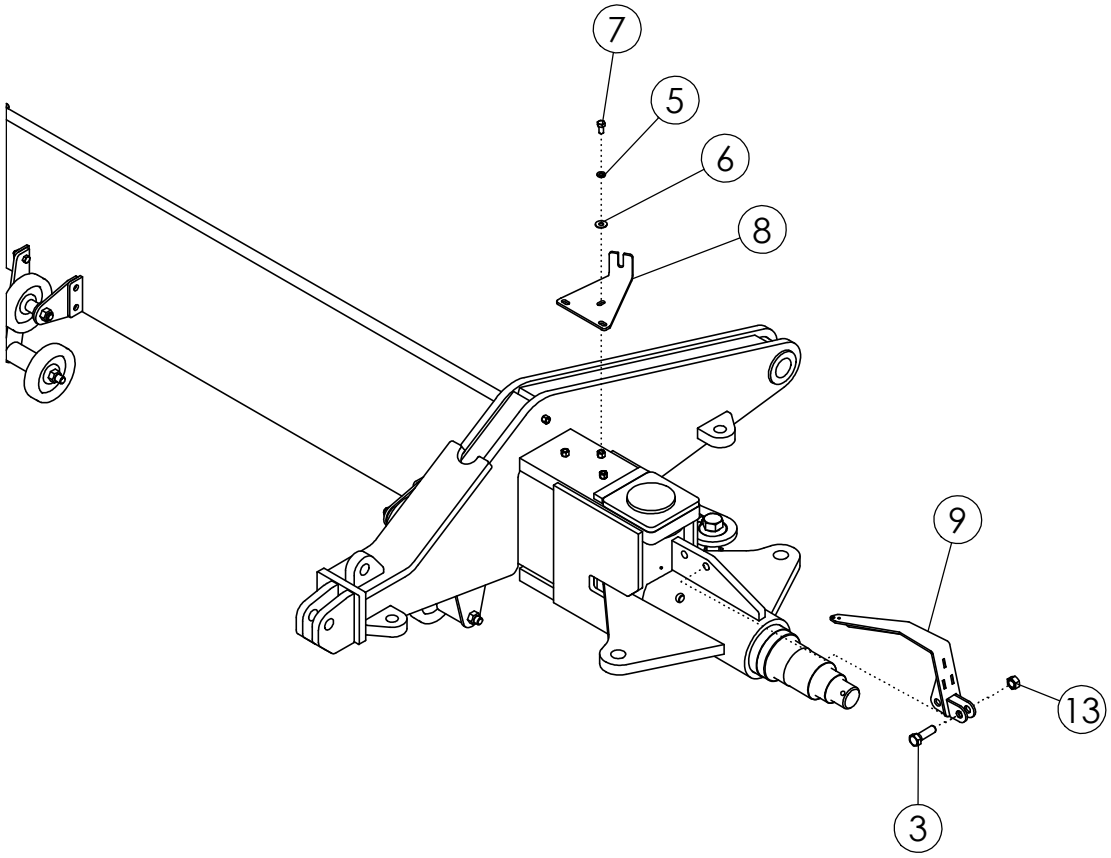
7
5
6
8
9
13
3

STEERING INDICATOR ASSEMBLY

ITEM	PART NO.	DESCRIPTION	QTY
1	1030700	NUT-TOPLOCK: .31 NC GR5 ZP	6
2	301932	BOLT-HEX: .31 X 7.00 NC GR5 ZP	3
	302363	BOLT-HEX: .31 X 5.00 NC GR5 ZP	
3	1011623	BOLT-HEX: .63 X 2.00 NC GR5 ZP	2
4	1016999	NUT-TOPLOCK: .38 NC GR5 ZP	1
5	1011586	WASHER-LOCK: .38 ZP	3
6	1011828	WASHER-FLAT .38 ZP	5
7	1011599	BOLT-HEX: .38 X .75 NC GR5 ZP	3
8	73437	PLATE-INDICATOR AXLE MOUNT	1
9	73438	WLDMT-INDICATOR TRUNNION MOUNT	1
10	73436	PLATE-INDICATOR CABLE MOUNT	1
11	73435	PLATE-INDICATOR GAUGE	1
12	73434	PLATE-INDICATOR DIAL	1
13	1016595	NUT-TOPLOCK: .63 NC GR5 ZP	2
14	73441	PUSH-PULL CABLE 10-32 X 9' (NOT SHOWN)	1
15	37761	P-CLIP .38 X 1.00 (NOT SHOWN)	1
16	1011600	BOLT-HEX: .38 X 1.00 NC GR5 ZP	1

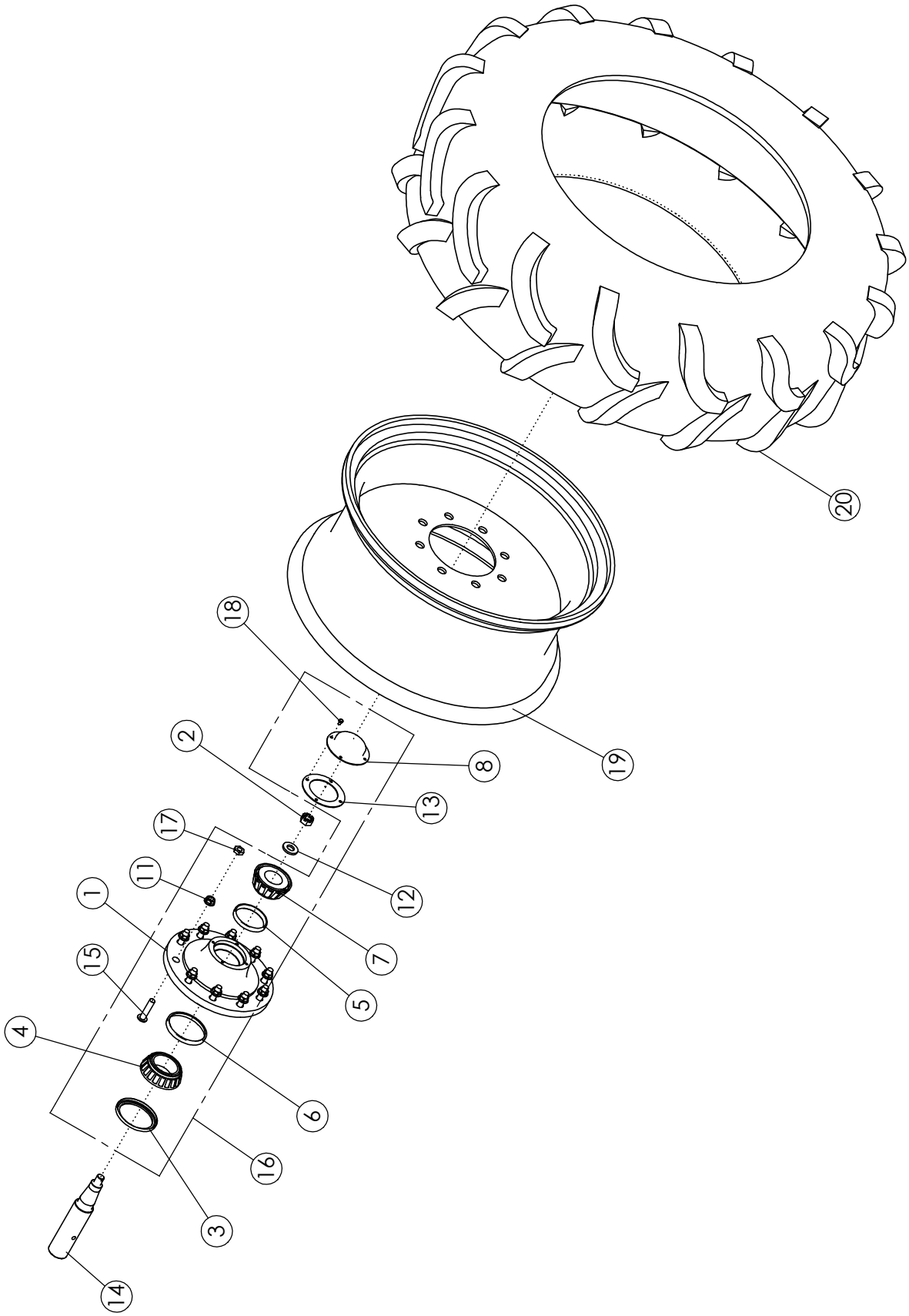
1
2
3
4
5
6
7
8
11
12
13
14
15
16
17
18
19
20

SPINDLE & HUB ASSEMBLY

ITEM	PART NO.	DESCRIPTION	QTY
1	37314**	HUB W/CUPS 7/8 STUDS - 10-BOLT	1
2	320163**	NUT-HEX: 2.00 NF NP	1
3	72972**	SEAL-10 BOLT HUB	1
4	72979**	CONE-INNER	1
5	72977*	CUP-INNER	1
6	72978*	CUP-OUTER	1
7	72980**	CONE-OUTER	1
8	72981**	CAP-HUB	1
11	37739**	NUT-FLANGE LUG .875 NF	10
12	320164*	WASHER-FLAT 4.0X2.03	1
13	320321	GASKET-RUBBER (13.19 HUB)	1
14	330076	SPINDLE-4.50 HR C1045	1
15	37766*	STUD-WHEEL .875 X 3.41 GR8 UNF	10
16	37309	ASSY-HUB/SPINDLE 10-BOLT	1
17	1040915	NUT-JAM: .88 NF GR2 ZP	10
18	1011596	BOLT-HEX: .31 X .50 NC GR5 ZP	4
STANDARD TIRE OPTION 710			
	72644	TIRE-MNTD: 710/70R38 177A8 R1W LH	
	72645	TIRE-MNTD: 710/70R38 177A8 R1W RH	
19	72646	WHEEL-38XMW23A (.62" INSET)	1
20	72647	TIRE-710/70R38 177A8 R1W	1
STEARABLE TIRE OPTION 600			
	72499	TIRE-MNTD: 600/60R30.5 (60PSI)	
	72628	TIRE-MNTD: 600/60R30.5 (60PSI) RH	
19	72497	WHEEL 20X30.5 10 BOLT (.63" INSET)	1
20	72498	TIRE-600/60R30.5 TL	1
STANDARD TIRE OPTION 900			
	302012	TIRE-MNTD: 900/60R32 TRELL TM2000 181A8 LH	
	302013	TIRE-MNTD: 900/60R32 TRELL TM2000 181A8 RH	
19	302011	WHEEL-27X32 GRAIN CART 10 H 13.187 BC	1
20	302010	TIRE-900/60R32 TRELL TM2000 181A8	1

*Items are included with Item 1

**Items are included with Item 16

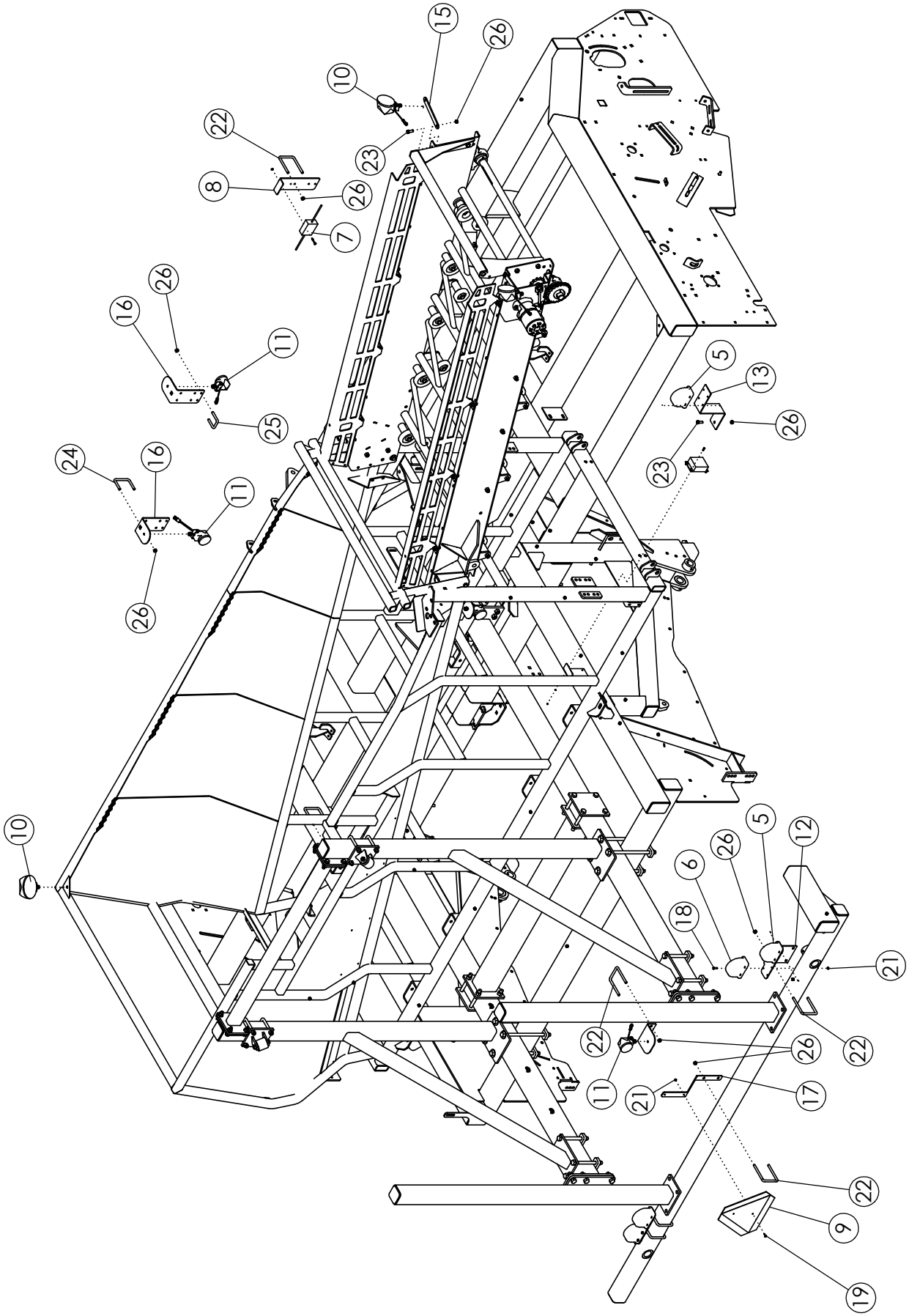
15
26
10
22
23
8
26
7
26
16
11
25
24
16
11
26
10
5
13
26
23
5
12
26
6
18
21
22
26
22
11
21
17
22
9
19

LIGHT KIT WHEEL HD

ITEM	PART NO.	DESCRIPTION	QTY
1	301335	HARNESS-HRV 12R MAIN (NOT SHOWN)	1
2	301336	HARNESS-HRV 12R HAZARD (NOT SHOWN)	1
3	301337	HARNESS-HRV 12R WORK LIGHT (NOT SHOWN)	1
4	301338	HARNESS-12R EXTENSION	1
5	305218	LIGHT-RED LAMP SAE	2
6	305217	LIGHT-YELLOW LAMP SAE	4
7	305216	HARNESS-FLASHER MODULE	1
8	301339	PLATE-LIGHT MODULE MOUNT	1
9	65329	SIGN-SMV ASAE	1
10	301293	LIGHT-GROTE 1200 OVAL FLOOD	3
11	301294	LIGHT-GROTE T26 NESAR FLOOD	4
12	300322	PLATE-LIGHT RED/AMBER WHEEL	2
13	72917	PLATE-CLEARANCE LIGHT	2
14	300325	PLATE-LIGHT MOUNT WHEEL	1
15	300326	PLATE-LIGHT MOUNT BOOM	2
16	300327	PLATE-LIGHT MOUNT	3
17	64246	MOUNT-SMV SIGN	1
18	1013423	BOLT-HEX: .25 X 1.00 NC GR5 ZP	24
19	1011595	BOLT-HEX: .25 X .75 NC GR5 ZP	2
20	1016853	BOLT-HEX: .25 X 1.75 NC GR5 ZP	2
21	1030946	NUT-TOPLOCK: .25 NC GR5 ZP	26
22	33856	U-BOLT: .50 X 5.50 X 4 X 5.50	6
23	1011606	BOLT-HEX: .50 X 1.25 NC GR5 ZP	4
24	54653	U-BOLT: .50 X 3.25 X 4.00 X 3.25	6
25	65658	U-BOLT: .50 X 3 X 2.06 X 3	2
26	1027461	NUT-TOPLOCK: .50 NC GR5 ZP	28

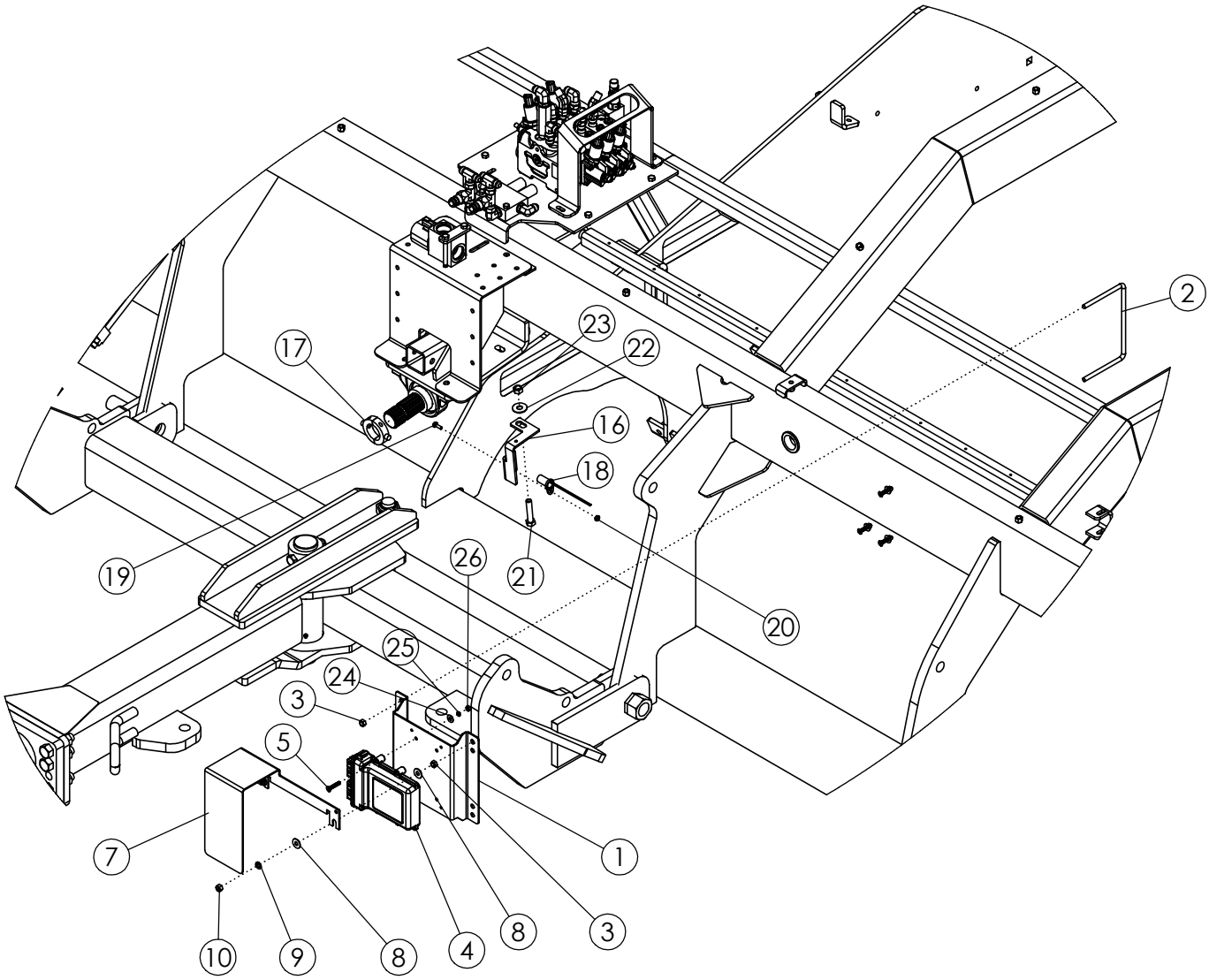
2
23
22
17
16
18
19
26
21
20
25
24
3
5
7
1
10
9
8
4
8
3

ADC ELECTRONICS

ITEM	PART NO.	DESCRIPTION	QTY
1	301046	PLATE-MNT CONTROL BOX ADC	1
2	64244	U-BOLT: .375 X 5.13 X 8.00 X 5.13 ZP	2
3	1016999	NUT-TOPLOCK: .38 NC GR5 ZP	4
4	303422	ASSY-ADC ISOBUS CONTROLLER	1
5	53753	SCREW-F-H-S-C: .25-20 X 1.50 GR8	4
6	1026591	NUT-K-LOCK: #10-24 NC GR2 ZP	4
7	301036	PLATE-SHIELD ADC	1
8	1011828	WASHER-FLAT .38 ZP	4
9	1011586	WASHER-LOCK: .38 ZP	2
10	1011576	NUT-HEX: .38 NC GR2 ZP	2
16	301024	BRACKET-PTO SENSOR ADC	1
17	64388	WLDMT-SPLIT COLLAR 1.75"	1
18	301014	SENSOR-PTO ADC	1
19	1011595	BOLT-HEX: .25 X .75 NC GR5 ZP	1
20	1013240	NUT-NYLOCK: .25 NC ZP	1
21	1011610	BOLT-HEX: .50 X 2.50 NC GR5 ZP	1
22	1014443	WASHER-FLAT: .50 ZP	1
23	1027461	NUT-TOPLOCK: .50 NC GR5 ZP	1
24	1020416	WASHER-FLAT: .25 ZP	4
25	1013242	WASHER-LOCK: .25 ZP	4
26	1011587	NUT-HEX: .25 NC GR2 ZP	4

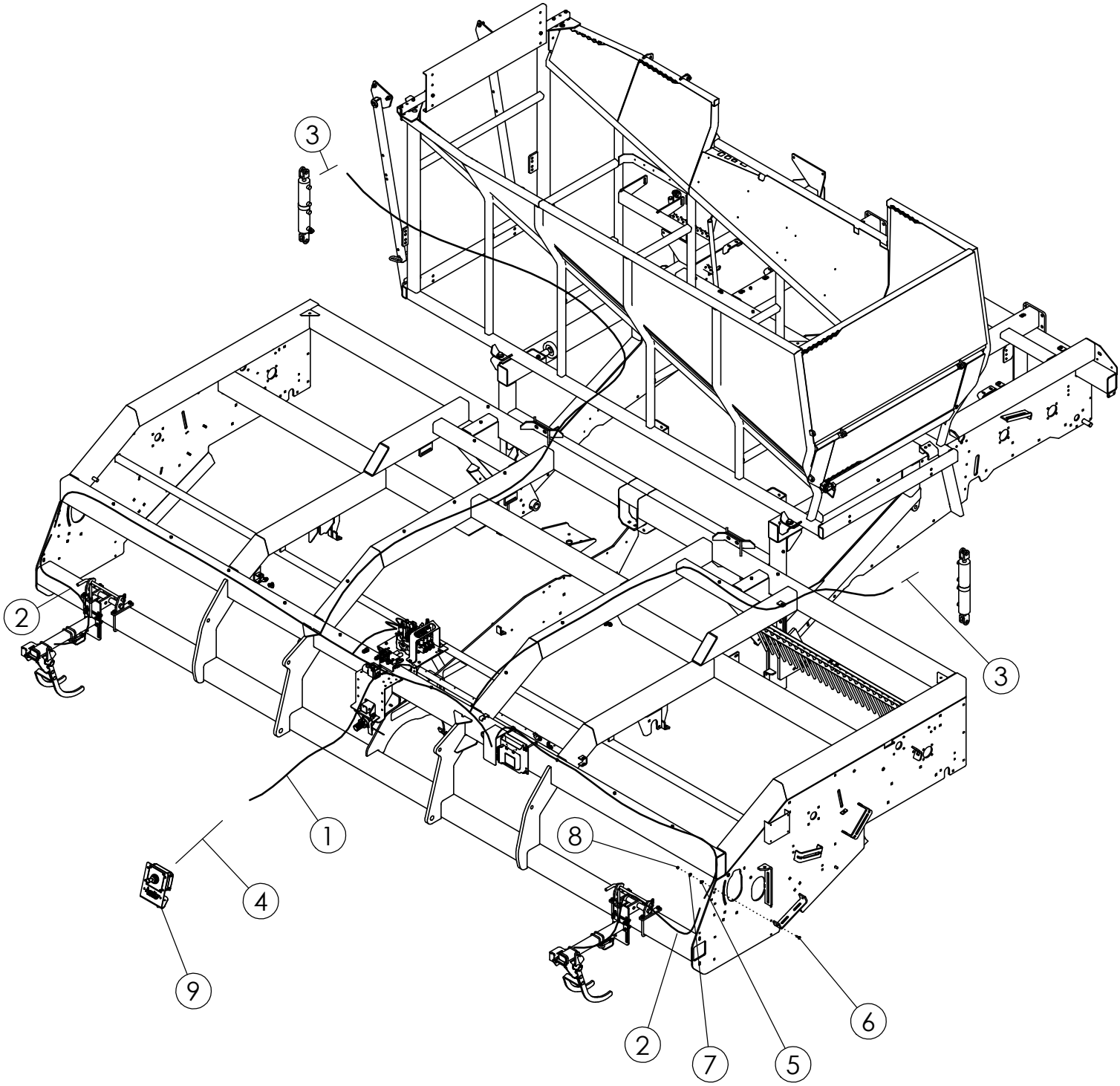
3
2
3
1
8
4
9
2
7
5
6

ACTIVE DEPTH CONTROL ELECTRICAL SCHEMATIC

ITEM	PART NO.	DESCRIPTION	QTY
1	303443	HARNESS-ADC ISOBUS MAIN 2720	1
2	301020	HARNSS-ADC POTENTIOMETER	2
3	73509	HARNESS-CYL SENSOR CONNECTOR	2
4	303444	HARNESS-ADC ISOBUS JOYSTICK EXT	1
5	300249	P-CLIP .38" X .313"	4
6	1016362	BOLT-CRG: .38 X 1.25 NC GR5 ZP	4
7	1011828	WASHER-FLAT: .38 ZP	4
8	1016999	NUT-TOPLOCK: .38 NC GR5 ZP	4
9	303448	KT-JOYSTICK WITH MOUNT	1

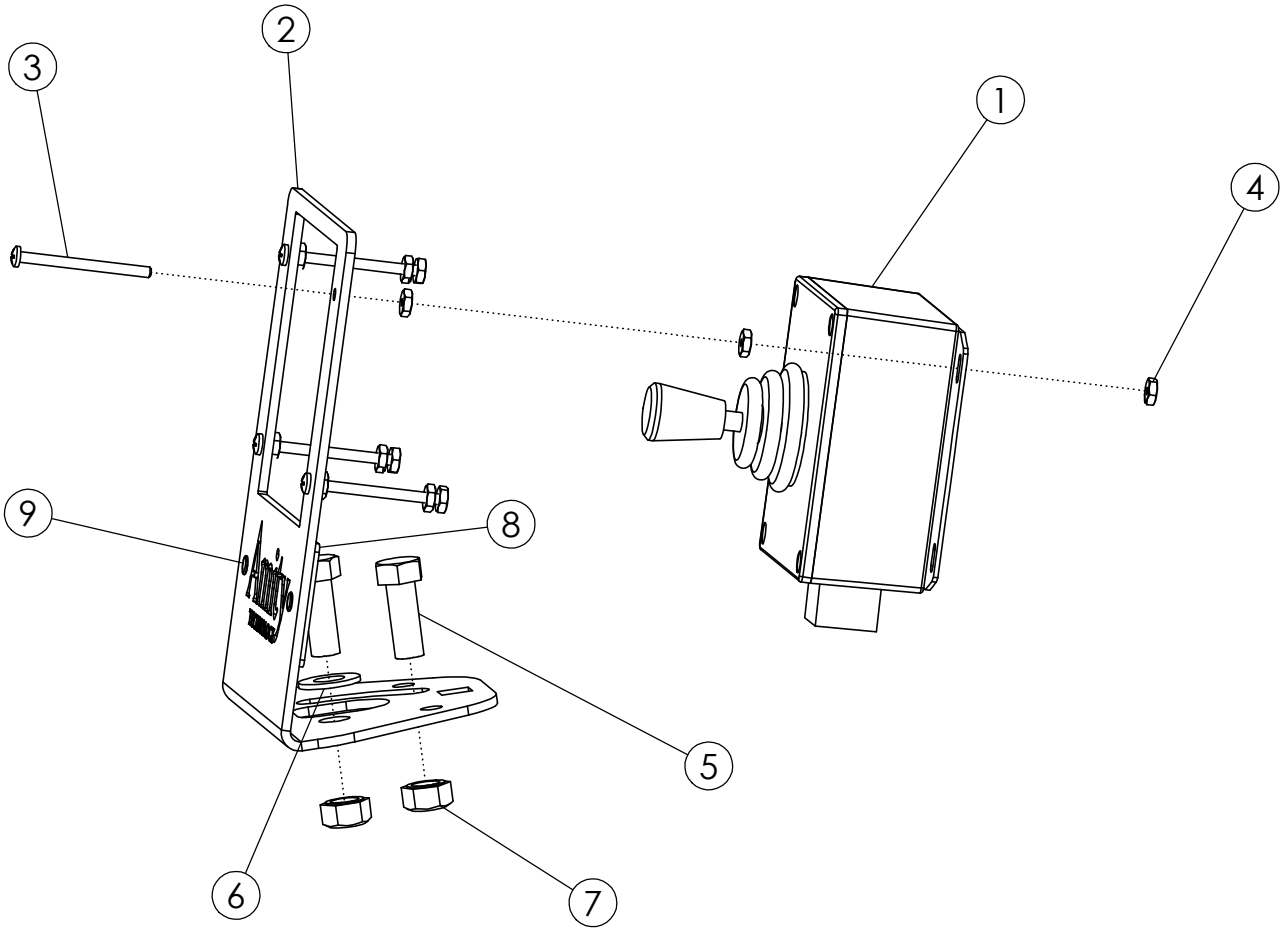
1
2
3
4
5
6
7
8
9

KT- JOYSTICK WITH MOUNT #303448			
ITEM	**PART NO.**	**DESCRIPTION**	**QTY**
1	301151	ASSY-JOYSTICK & ENCLOSURE	1
2	303451	PLATE-JOYSTICK MOUNT	1
3	1019992	SCREW P-H: #6 X 1.75 NC GR5 ZP	4
4	1040448	#6 NUT	12
5	1011600	BOLT-HEX: .38 X 1.00 NC GR5 ZP	2
6	1014608	WASHER-FLAT: SAE .38 ZP	1
7	1016999	NUT-TOPLOCK: .38 NC GR5 ZP	2
8	311514	PLATE-JOYSTICK LOGO	1
9	59882	RIVET-POP: .13 X .31 ZP	2

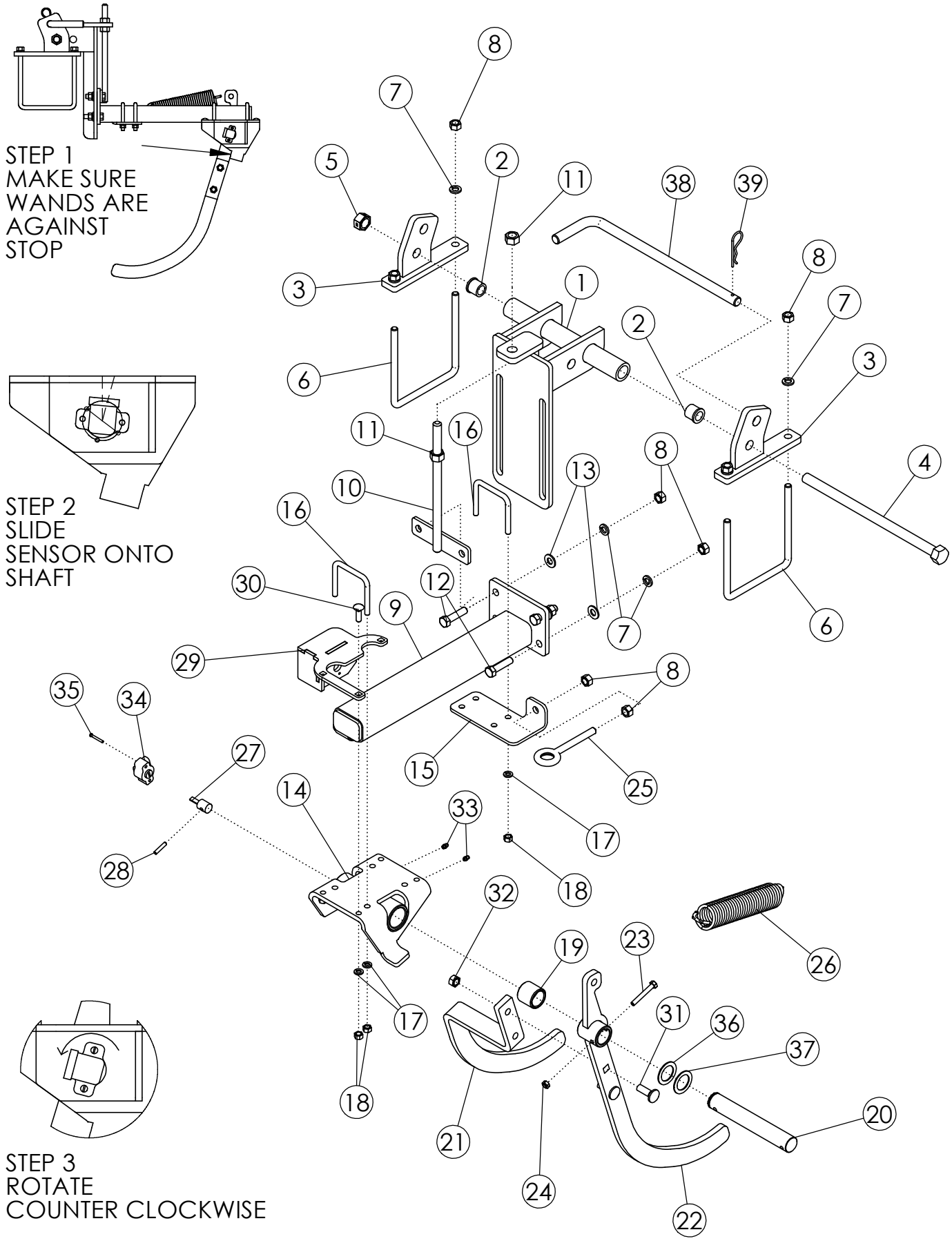
STEP 1
MAKE SURE
WANDS ARE
AGAINST
STOP
STEP 2
SLIDE
SENSOR ONTO
SHAFT
STEP 3
ROTATE
COUNTER CLOCKWISE
STEP 4
INSTALL SCREWS
AND TIGHTEN

ACTIVE DEPTH CONTROL WANDS

ITEM	PART NO.	DESCRIPTION	QTY
1	63661	WLDMT-MOUNTING BRACKET	1
2	52654	BUSHING-FLANGE	2
3	300214	WLDMT-MOUNTING SUPPORT ADC NARROW	2
4	63664	BOLT-HEX: .75 X 14.00 NC GR5 ZP	1
5	1013537	NUT-CENTERLOCK: .75 NC ZP	1
6	53984	U-BOLT 1/2 X 7 X 6 X 7	2
7	1011581	WASHER-LOCK: .50 ZP	8
8	1011577	NUT-HEX: .50 NC ZP	10
9	300216	WLDMT-ADC ARM 8R	1
	73474	WLDMT-ADC ARM 12R	
10	62882	WLDMT-TIGHTENER 11.125" ZP	1
11	1011578	NUT-HEX: .63 NC GR2 ZP	2
12	1011609	BOLT-HEX: .50 X 2.00 NC GR5 ZP	4
13	1011584	WASHER-FLAT: SAE .50 ZP	4
14	300218	WLDMT-ADC MAIN 8R/12R	1
15	73490	PLATE-ADC BOLT EYELET	1
16	73491	U-BOLT .375 X 3.00 X 3.063 X 3.000	4
17	1011586	WASHER-LOCK: .38 ZP	11
18	1011576	NUT-HEX: .38 NC GR2 ZP	11
19	56939	BUSHING-BRONZE	2
20	301244	SHAFT-ADC B 8R/12R	1
21	300228	PLATE-WAND SENSOR SIDE	1
22	73475	WLDMT-WAND SPRING SIDE	1
23	301258	BOLT-HEX: .31 X 2.25 NC GR8 ZP	1
24	1030700	NUT-TOPLOCK: .31 NC GR5 ZP	1
25	52306	BOLT-EYE	1
26	53159	SPRING	1
27	73487	SHAFT-ADC A ZP	1
28	73489	BAR-ADC PIN	1
29	300224	WLDMT-ADC SENSOR HOUSING 8R/12R	1
30	1016362	BOLT-CRG: .38 X 1.25 NC GR5 ZP	3
31	1011660	BOLT-CRG: .50 X 1.50 NC GR5 ZP	2
32	1027461	NUT-TOPLOCK: .50 NC GR5 ZP	2
33	1011748	ZERK-GREASE: .25UNF STRAIGHT	2
34	73492	SENSOR-ROTARY POSITION (JD: AH233087)	1
35	1011304	SCREW-MACHINE RND SLT #10-32 X 1.25	2
36	301058	SNAP-RING 1.250"	1
37	55206	BUSHING-MACH: 1.25 NR 14GA	1 OR 2
38	301267	ROD-WAND LOCK	1
39	1029164	PIN-HAIR: .19 X 3.00 ZP	1

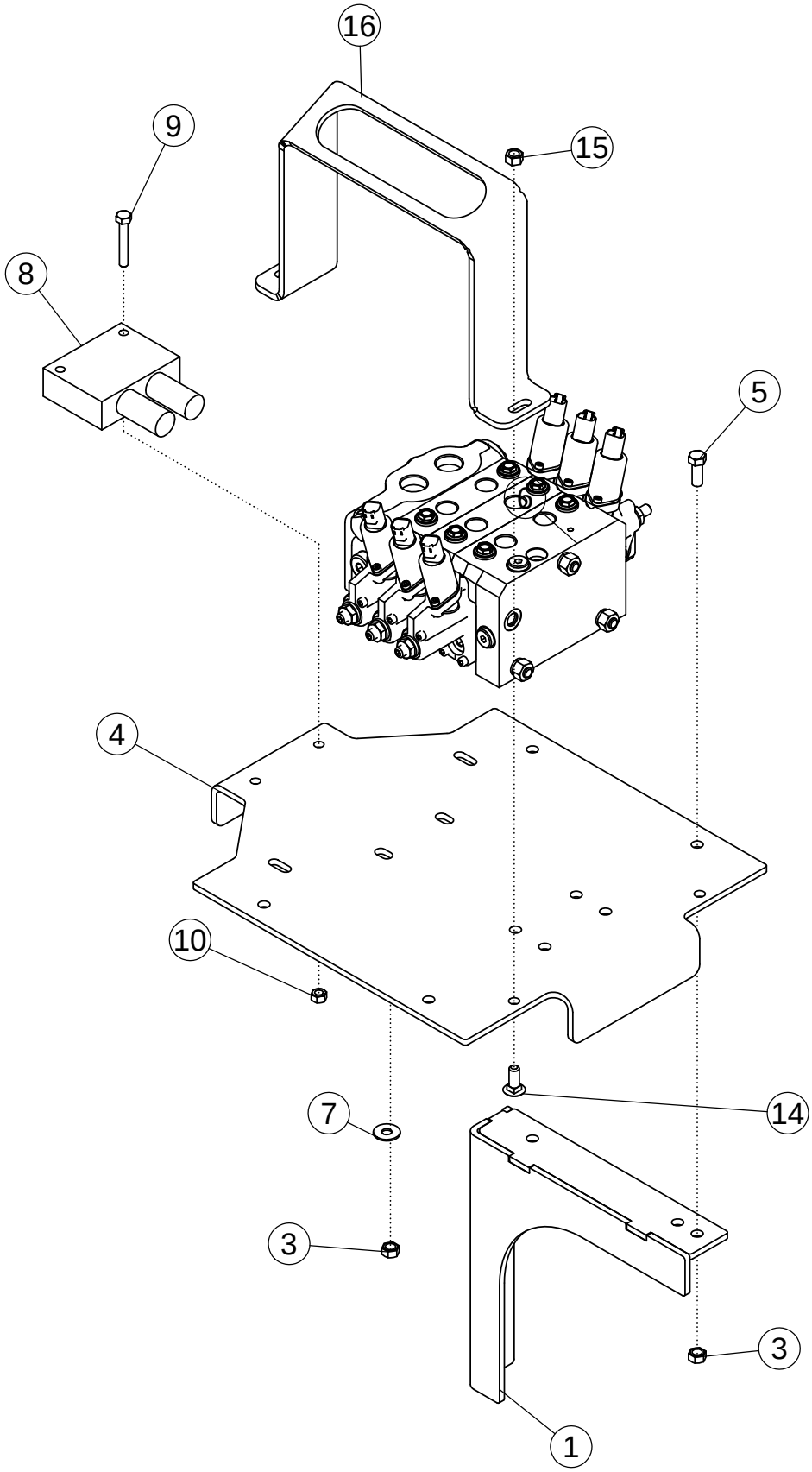
16
9
15
8
5
4
10
7
14
3
3
1

ADC HYDRAULIC COMPONENTS

ITEM	PART NO.	DESCRIPTION	QTY
1	301042	WLDMT-SUPPORT VALVE	2
2	64244	U-BOLT: .375 X 5.13 X 8 X 5.13 (12R)	2
3	1016999	NUT-TOPLOCK: .38 NC GR5 ZP	12
4	302354	PLATE-MOUNT VALVES ADC	1
5	1011600	BOLT-HEX: .38 X 1.00 NC GR5 ZP	8
6	302261	VALVE-ADC 3 BANK	1
7	1011828	WASHER-FLAT .38 ZP	6
8	73426	VALVE-DUAL COUNTER BALANCE	1
	301854	CARTRIDGE-VALVE DUAL COUNTER BALANCE	2
9	1011285	BOLT-HEX: .31 X 2.00 NC	2
10	1030700	NUT-TOPLOCK: .31 NC GR5 ZP	2
11	301045	BAR-BOLTING (8R)	2
12	1021757	BOLT-HEX: .38 X 5.00 NC GR5 ZP (8R)	4
13	302430	SHIELD-ADC VALVE	2
14	59488	BOLT-CRG: .38 X 1.00 NC GR5 ZP	4
15	1011576	NUT-HEX: .38 NC GR2 ZP	4

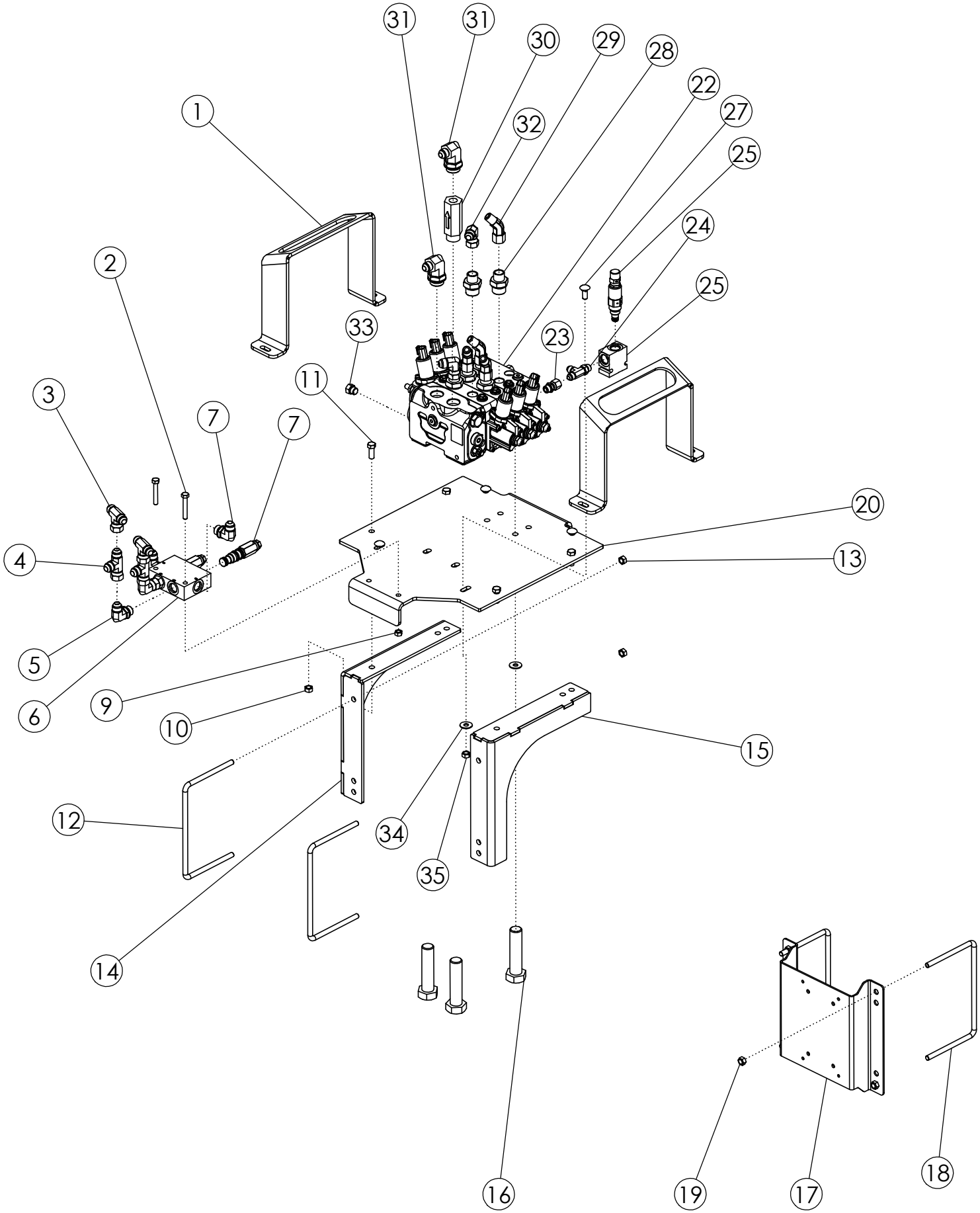
31
31
30
29
28
22
27
25
24
25
23
1
32
2
33
11
3
7
7
20
4
13
5
6
9
10
15
12
34
35
14
16
19
17
18

ADC HYDRAULIC COMMON

ITEM	PART NO.	DESCRIPTION	QTY
1	302430	SHIELD-ADC VALVE	2
2	1011285	BOLT-HEX: .31 X 2.00 NC GR5 ZP	2
3	66603	FTG-TEE: 8MJ-8MJ-8FJX	2
4	63015	FTG-TEE: 8MJ-8FJX-8MJ	2
5	58560	FTG-ELBOW: 8MB-8MJ-90	2
6	73426	VALVE-DUAL COUNTER BALANCE	1
7	58560	FTG-ELBOW: 8MB-8MJ-90	2
9	1030700	NUT-TOPLOCK: .31 NC GR5 ZP	2
10	1016999	NUT-TOPLOCK: .38 NC GR5 ZP	4
11	1011600	BOLT-HEX: .38 X 1.00 NC GR5 ZP	4
12	64244	U-BOLT: .375 X 5.13 X 8.00 X 5.13 ZP	2
13	1016999	NUT-TOPLOCK: .38 NC GR5 ZP	4
14	301044	PLATE-SUPPORT TOP 8R/12R	1
15	301043	PLATE-SUPPORT SIDE 8R	1
17	301046	PLATE-MNT CONTROL BOX ADC 8R/12R	1
18	64244	U-BOLT: .375 X 5.13 X 8.00 X 5.13 ZP	2
19	1016999	NUT-TOPLOCK: .38 NC GR5 ZP	4
20	302354	PLATE-ADC VALVE MOUNT (2018)	1
22	302261	VALVE-ADC 3 BANK (2018)	1
23	67008	FTG-ADAPTER: 6MB-6FJX	1
24	301033	FTG-TEE: 6MJ-6MB-6MJ	1
25	301018	VALVE-CASE DRAIN RELIEF (ADC)	1
27	59488	BOLT-CRG: .38 X 1.00 NC GR5 ZP	4
28	58195	FTG-ADAPTER: 10MB-8MJ	6
29	57663	FTG-ELBOW: 8MJ-8FJX-45	4
30	302262	VALVE-CHECK: 12MB - 12FB 5000 PSI	1
31	73494	FTG-ELBOW: 12MB-8MJ-90	2
32	57668	FTG-ELBOW: 8MJ-8FJX-90	2
33	63033	FTG-PLUG: 6MB	1
34	1011828	WASHER-FLAT: .38 ZP	4
35	1016999	NUT-TOPLOCK: .38 NC GR5 ZP	4
36	73421	CYLINDER-HYD 4 X 10-3000-0° ADC	2

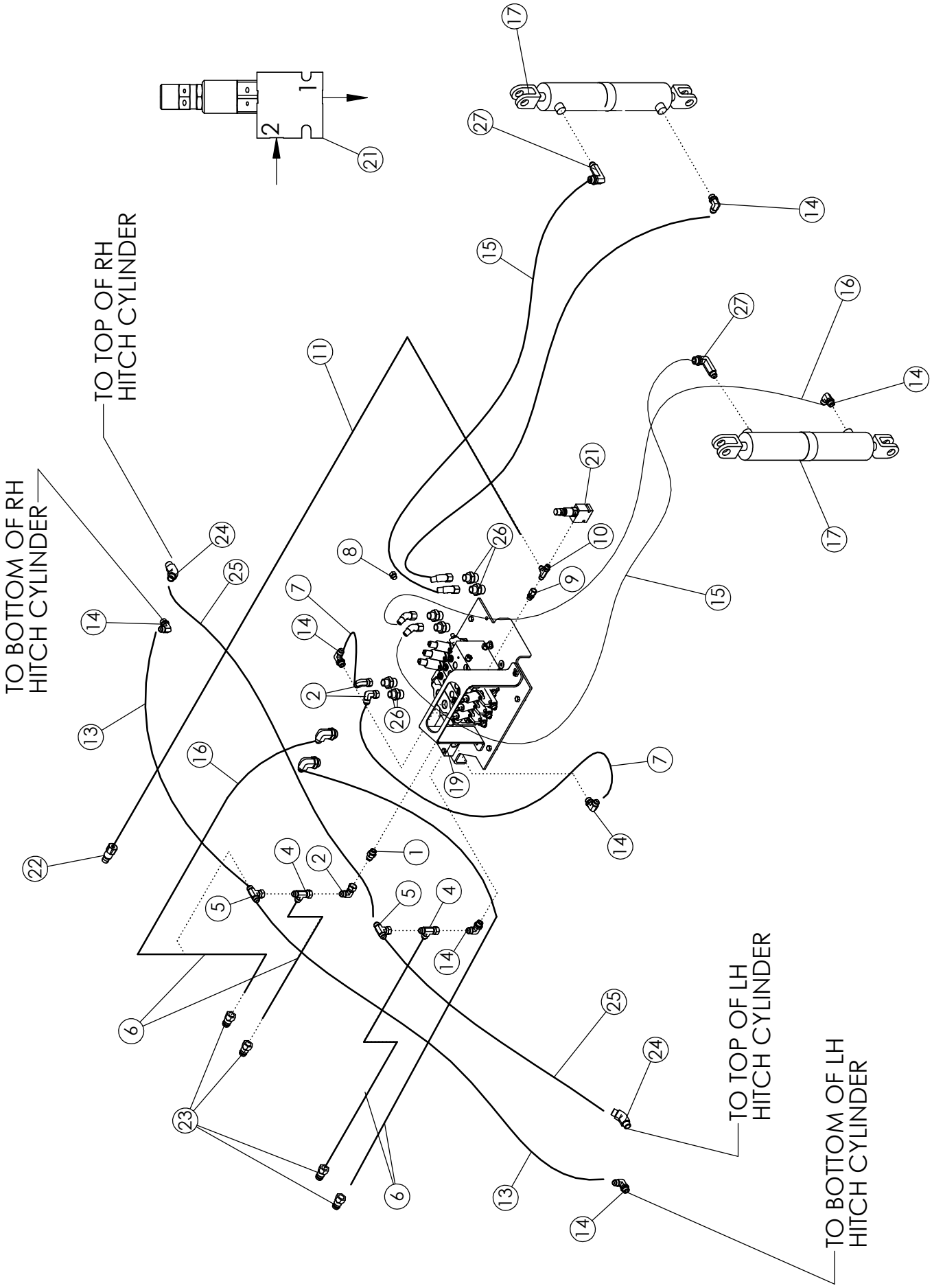
TO TOP OF RH
HITCH CYLINDER
TO BOTTOM OF RH
HITCH CYLINDER
TO TOP OF LH
HITCH CYLINDER
TO BOTTOM OF LH
HITCH CYLINDER

ACTIVE DEPTH CONTROL HYDRAULICS

ITEM	PART NO.	DESCRIPTION	QTY
1	56226	FTG-ADAPTER: 8MB-8MJ	1
2	57668	FTG-ELBOW: 8MJ-8FJX-90	6
3	57663	FTG-ELBOW: 8MJ-8FJX-45	4
4	63015	FTG-TEE: 8MJ-8FJX-8MJ	2
5	66603	FTG-TEE: 8MJ-8MJ-8FJX	2
6	37705	HOSE: .50 X 128 8MB-8FJX	4
7	64263	HOSE: .50 X 011 8JFX-8FJX	2
8	73593	FTG-PLUG: 4MB	1
9	67008	FTG-ADAPTER: 6MB-6FJX	1
10	301033	FTG-TEE: 6MJ-6MB-6MJ	1
11	301818	HOSE: .38 X 146 8MB-6FJX (8ROW)	1
	301648	HOSE: .38 X 160 8MB-6FJX (12ROW)	
12	65901	FTG-ELBOW: 10MB-8MJ90	1
13	35770	HOSE: .50 X 52 8FJX-8FJX	2
14	58560	FTG-ELBOW: 8MB-8MJ-90	7
15	73594	HOSE: .38 X 228 8FJX-8FJX (12R)	2
	301819	HOSE: .38 X 212 8FJX-8FJX (8R)	
16	69737	HOSE: .38 X 240 8JFX-8FJX (12R)	2
	301820	HOSE: .38 X 226 8FJX-8FJX (8R)	
17	73421	CYLINDER-HYD 4 X 10 10-3000-0° ADC	2
	73629	SEAL KIT-CYL 4 X 10 (73421)	
18	73423	VLAVE-MODULATED 3-BANK	1
19	73426	VALVE-DUAL COUNTER BALANCE	1
20	301016	VALVE-CHECK: 10MB-10FB 5000 PSI	1
21	301018	VALVE-CASE DRAIN RELIEF	1
22	69119	FTG-CASE DRAIN 3/8 FLAT FACE	1
	36290	PIONEER TIP 8010-15P (#8 ORB)	
23	36290	PIONEER TIP 8010-15P (#8 ORB)	4
24	58515	FTG-ELBOW: 8MB-8MJ-45	2
25	1015221	HOSE: .50 X 040 8FJX-8FJX (12R)	2
	57676	HOSE: .50 X 31 8FJX-8FJX (8R)	
26	58195	FTG-ADAPTER: 10MB-8MJ	7
27	305402	FTG-ELBOW: 8MB-8MJ-90L	2

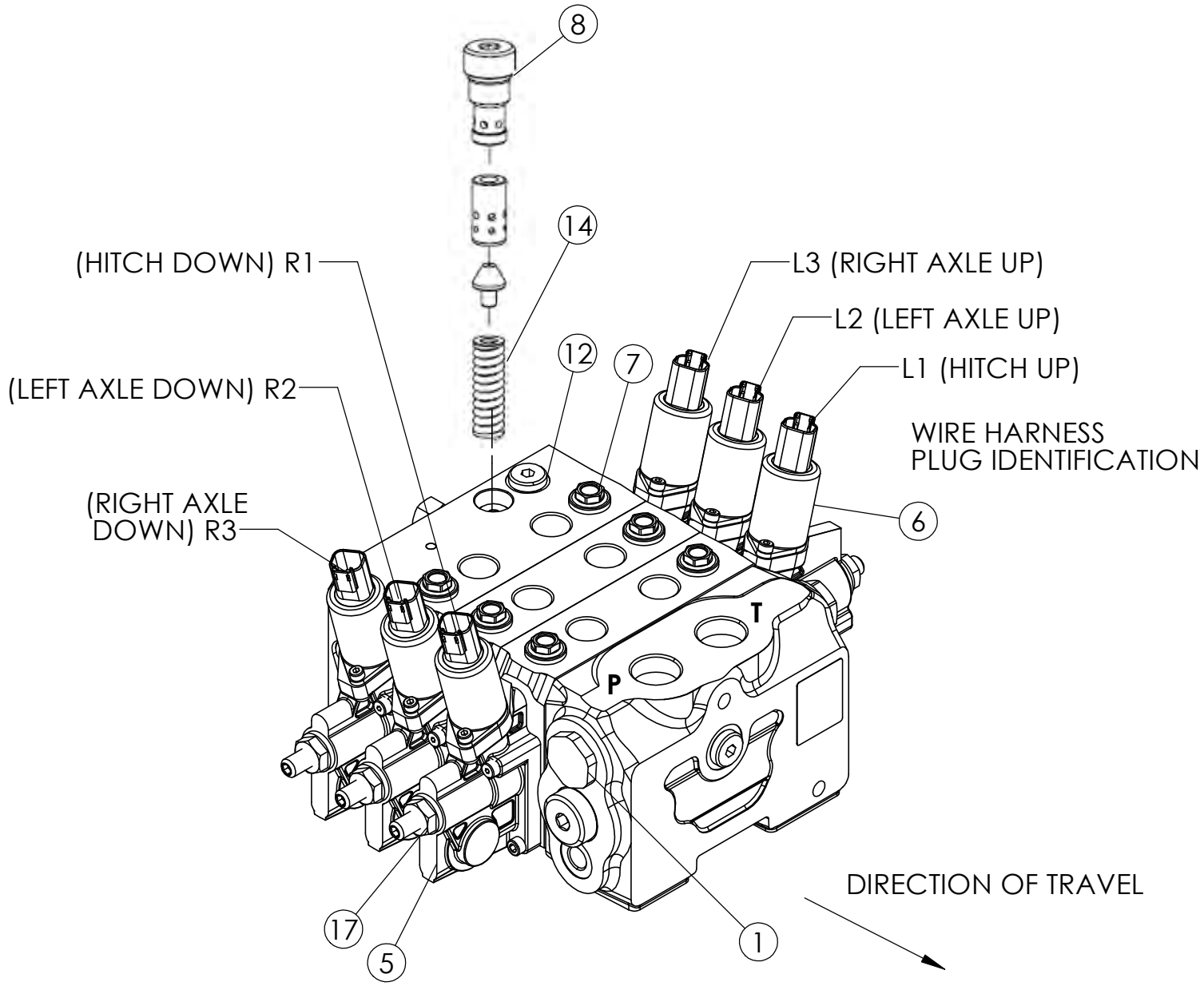

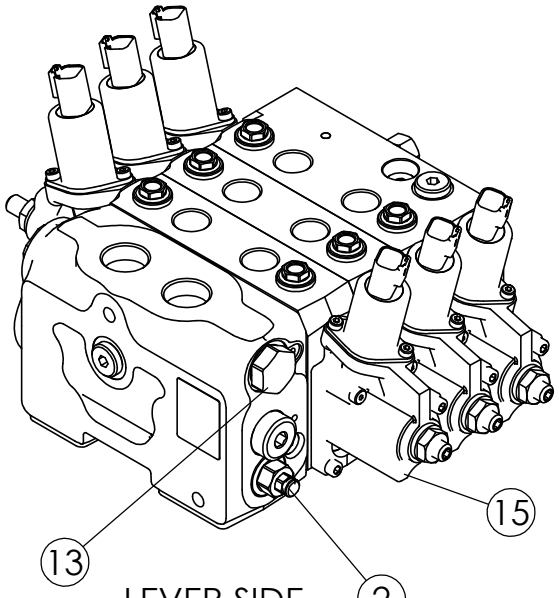

LEVER SIDE
ISOMETRIC
VIEW

VALVE-ADC 3 BANK #302261			
ITEM	**PART NO.**	**DESCRIPTION**	**QTY**
1	303014	PLUG ASSY ADC 3-BANK VALVE	1
2	303015	LS RELIEF VALVE 255-350 BAR	
3	303016	H-SPOOL 65L	1
4	303017	D-SPOOL 15L	2
5	303018	EH ACTUATION WITH STROKE LIMITER-SPRING SIDI	6
6	303019	THOMAS MAGNETTE DEUTSCH CONNECTOR 12 V D	6
7	303020	PLUG ASSY	1
8	303021	PLUG S/A, PR. REDUCING VALVE (SPOOL END)	1
9	303022	KT-SEAL FOR BTWN INLET SECTION,(NOT SHOWN)	4
10	303023	KT-SEAL ELEC PROPRTNL END CAP (SPRING SIDE)	
11	303024	KT-SEAL ELEC PROPRTNL END CAP (LEVER SIDE)	
12	303025	SET SCREW FOR ADC VALVE	1
13	303026	LS DUMP VALVE PLUG ASSEMBLY	
14	303027	SPRING, PR. REDUCING VALVE	
15	303028	EH ACTUATION ASSEMBLY WITH STROKE LIMITER	
16	303029	COMP SECTION PLUG S/A	
17	303030	STROKE LIMITER SEAL NUT	

*NOTE: VALVE COMES STANDARD WITH CLOSED CENTER PLUG

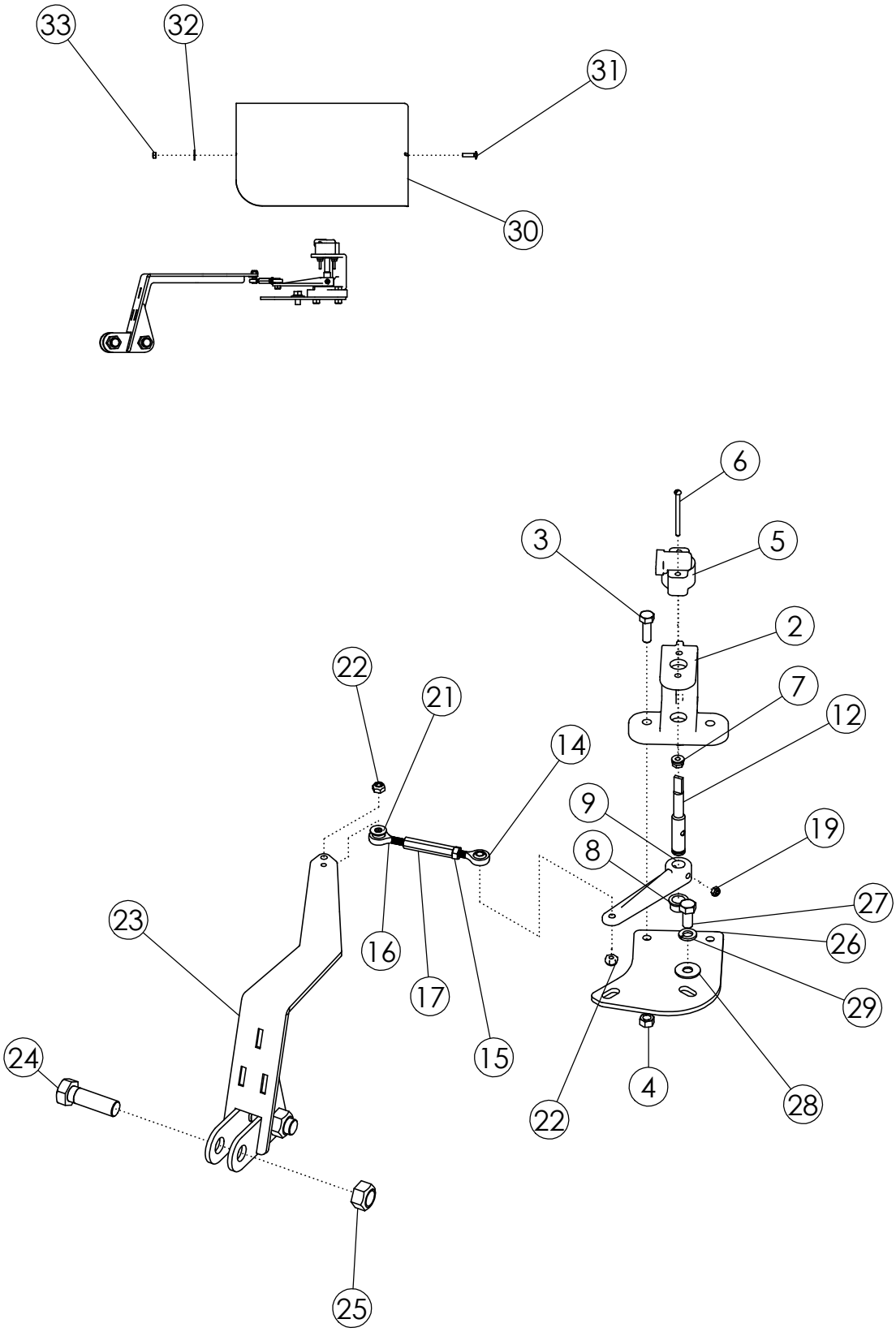
33
32
31
30
6
5
3
2
7
12
22
21
14
9
19
8
27
26
23
16
17
29
15
24
4
28
22
25

KIT-JD TOUCHSET 2700 STEERING

ITEM	PART NO.	DESCRIPTION	QTY
1	302984	HARNESS-JD TOUCHSET 2700 (NOT SHOWN)	1
2	306821	SENSOR BRACKET-DLS	1
3	1011598	BOLT-HEX: .31 X 1.00 NC GR5 ZP	2
4	1030700	NUT-TOPLOCK: .31 NC GR5 ZP	2
5	73492	SENSOR-ROTARY POSITION	1
6	306836	SCREW-MACHINE RND SLT #10-24 X 1.25	2
7	1026591	NUT-K-LOCK: #10-24 NC GR2 ZP	2
8	306822	GROMMET-DLS SHAFT	1
9	306823	LEVER-DLS	1
10	306825	SUPPORT-DLS SHAFT (NOT SHOWN)	1
11	306826	O-RING (NOT SHOWN)	1
12	306827	SHAFT-DLS ZP	1
14	306828	BALL JOINT ROD END, 1/4"-28, RH	1
15	1011579	NUT-HEX: .25 NF GR2 ZP	1
16	306826	BALL JOINT ROD END, 1/4"-28, LH	1
17	306830	TURNBUCKLE, 1/4"-28	1
18	306831	BOLT-SHLDER:C54 3/16" X 1.0" SHLD LG #8-32	1
19	62617	NUT-NYLOCK: #8-32 GR2 ZP	1
20	306832	BOLT-SHLDER:C54 1/4" X 1/2" SHLD LG #10-24	2
21	65695	WASHER-FLAT: .25 SS	1
22	67079	NUT-NYLOCK: #10-24 GR2 ZP	2
23	73438	WLDMT-INDICATOR TRUNNION MOUNT	1
24	1011623	BOLT-HEX: .63 X 2.00 NC GR5 ZP	2
25	1016595	NUT-TOPLOCK: .63 NC GR5 ZP	2
26	302986	PLATE-TOUCHSET MOUNT	1
27	1011599	BOLT-HEX: .38 X .75 NC GR5 ZP	1
28	1011828	WASHER-FLAT .38 ZP	1
29	1011586	WASHER-LOCK: .38 ZP	2
30	303416	PLATE-TOUCH SET SHIELD	1
31	1017254	BOLT-CRG: .25 X 1.00 NC GR5 ZP	4
32	1020416	WASHER-FLAT: .25 ZP	4
33	1030946	NUT-TOPLOCK: .25 NC GR5 ZP	4

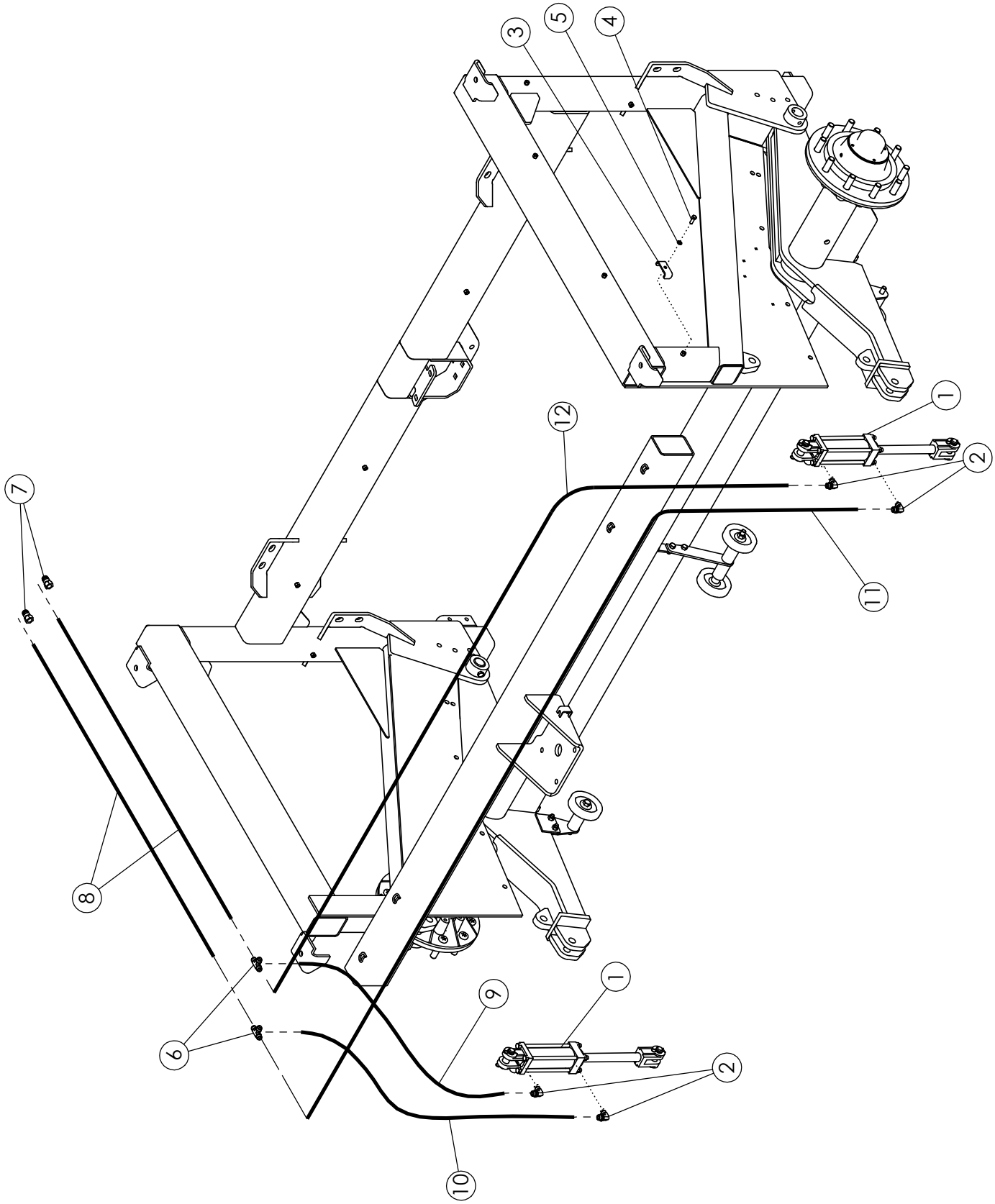
3
5
4
1
2
12
11
7
8
6
9
1
2
10

AXLE HYDRAULICS

ITEM	PART NO.	DESCRIPTION	QTY
1	72950	CYLINDER-HYDRAULIC 4 X 10-3000-90°	2
	301315	SEAL KIT FOR 72950 UNIVERSAL	
2	58560	FTG-ELBOW: 8MB-8MJ-90	4
3	50714	CLAMP .50 ZP	25
4	1011600	BOLT-HEX: .38 X 1.00 NC GR5 ZP	25
5	1011586	WASHER-LOCK: .38 ZP	25
6	57667	FTG-TEE: 8MJ-8MJ-8MJ	2
7	36290	PIONEER TIP 8010-15P (#8 ORB)	2
8	300047	HOSE: .38 X 348 8MB-8FJX	2
9	72476	HOSE: .38 X 25 8FJX-8FJX	1
10	72909	HOSE: .38 X 38 8FJX-8FJX	1
11	72480	HOSE: .38 X 177 8FJX-8FJX	1
12	72479	HOSE: .38 X 164 8FJX-8FJX	1
	52320*	CYLINDER STOP A-KIT (NOT SHOWN)	2
	54004*	CYLINDER STOP 1-1/2 (NOT SHOWN)	6

* USE AS REQUIRED TO LEVEL HARVESTER

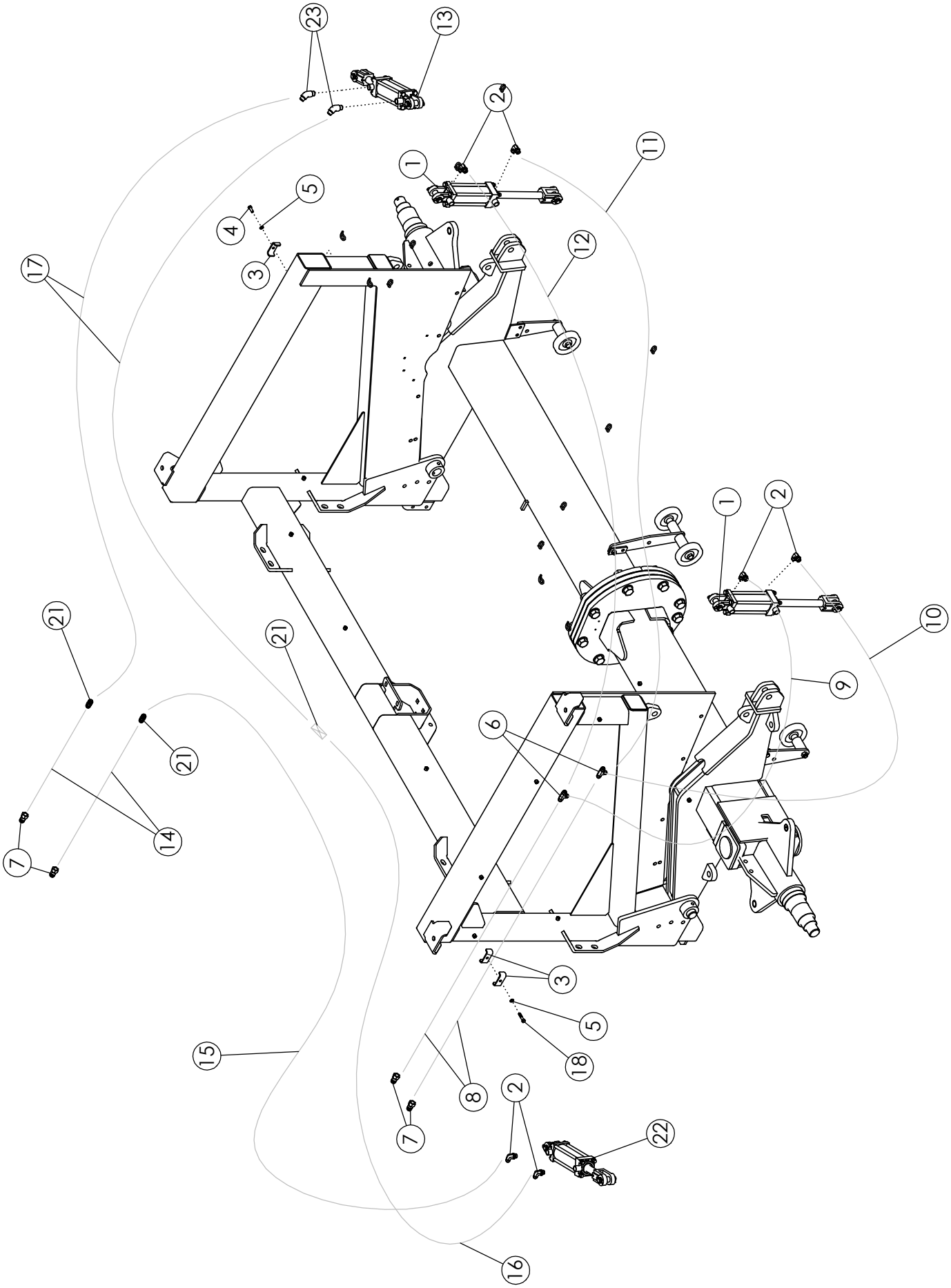
23
13
2
1
11
5
4
3
12
17
1
2
21
21
10
9
21
6
14
7
3
5
15
18
8
2
7
22
16

STEERABLE STRUT HYDRAULICS

ITEM	PART NO.	DESCRIPTION	QTY
1	72950	CYLINDER-HYDRAULIC 4 X 10-3000-90°	2
	301315	SEAL KIT FOR 72950 UNIVERSAL	
2	58560	FTG-ELBOW: 8MB-8MJ-90	6
3	50714	CLAMP .50 ZP	39
4	1011600	BOLT-HEX: .38 X 1.00 NC GR5 ZP	25
5	1011586	WASHER-LOCK: .38 ZP	32
6	57667	FTG-TEE: 8MJ-8MJ-8MJ	2
7	36290	PIONEER TIP 8010-15P (#8 ORB)	4
8	300047	HOSE: .38 X 348 8MB-8FJX	2
9	72476	HOSE: .38 X 25 8FJX-8FJX	1
10	72909	HOSE: .38 X 38 8FJX-8FJX	1
11	72480	HOSE: .38 X 177 8FJX-8FJX	1
12	72479	HOSE: .38 X 164 8FJX-8FJX	1
13	301340	CYLINDER-HYD: 4" X 6" RPHS 3000 (RH REAR)	1
	301367	SEAL KT-CYL: 4 X 6 3000PSI #301340	
	301380	CLEVIS KT-CYL 4 X 6, 4.25 X 6 REPHASE	
14	301848	HOSE: .38 X 300 8FJX-8MB	2
15	68247	HOSE: .38 X 60 8FJX-8FJX	1
16	301364	HOSE: .38 X 040 8FJX-8FJX	1
17	64104	HOSE: .38 X 198 8FJX-8FJX	2
18	1011603	BOLT-HEX: .38 X 1.75 NC GR5 ZP	7
19	52320*	CYLINDER STOP A-KIT (NOT SHOWN)	2
20	54004*	CYLINDER STOP 1-1/2 (NOT SHOWN)	10
21	58194	FTG-ADAPTER: 8MJ-8MJ	3
22	301365	CYLINDER-HYD: 4.25 X 6" RPHS 3000 (LH FRONT)	1
	301368	SEAL KT-CYL: 4.25 X 6 3000PSI #301365	
	301380	CLEVIS KT-CYL 4 X 6, 4.25 X 6 REPHASE	
23	58515	FTG-ELBOW: 8MB-8MJ-45	2

* USE AS REQUIRED TO LEVEL HARVESTER

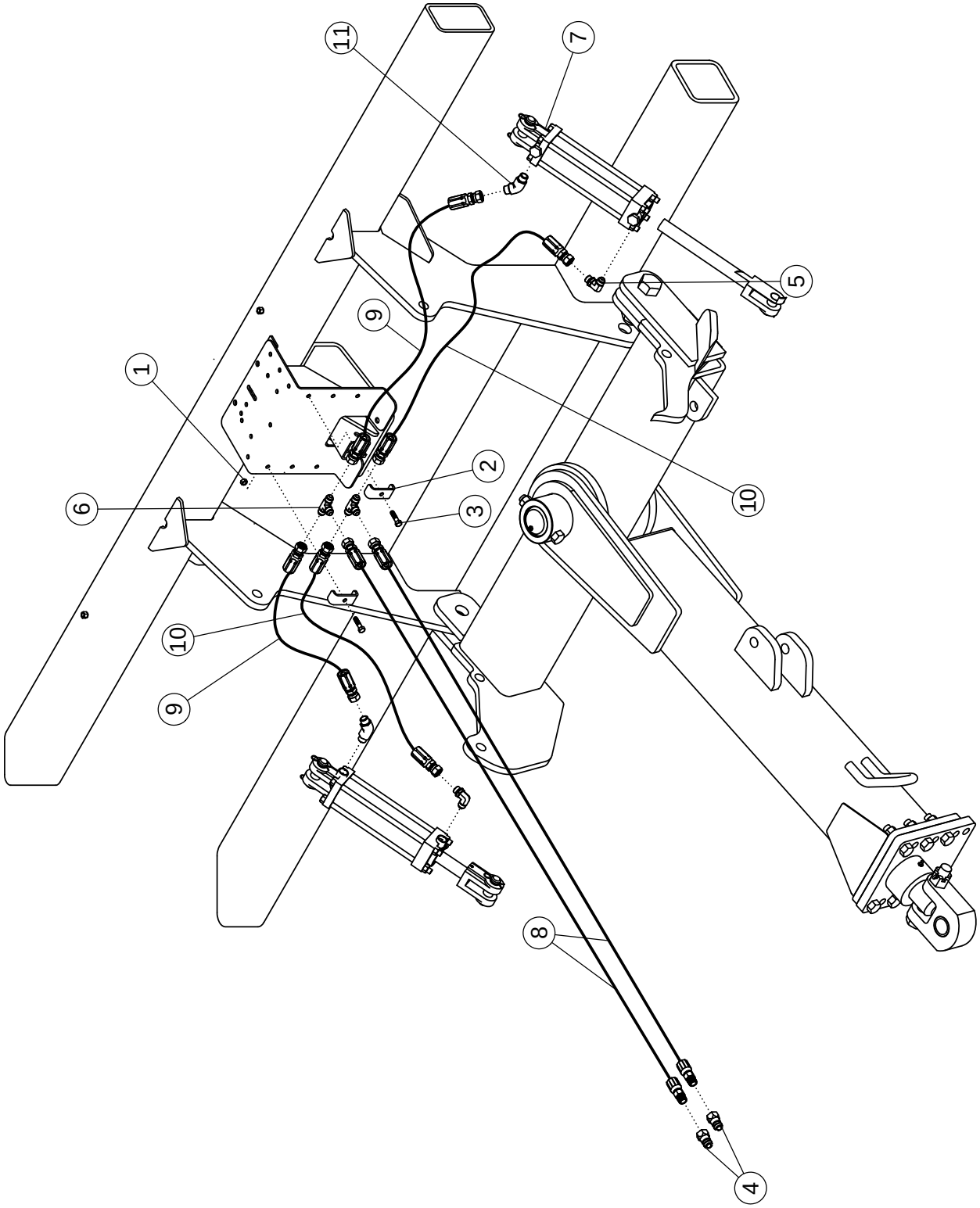
11
7
5
9
1
2
6
3
10
10
9
8
4

HITCH HYDRAULICS

ITEM	PART NO.	DESCRIPTION	QTY
1	1016999	NUT-TOPLOCK: .38 NC GR5 ZP	6
2	50714	CLAMP .50 ZP	6
3	1011602	BOLT-HEX: .38 X 1.50 NC GR5 ZP	6
4	36290	PIONEER TIP 8010-15P (#8 ORB)	2
5	58560	FTG-ELBOW: 8MB-8MJ-90	2
6	57667	FTG-TEE: 8MJ-8MJ-8MJ	4
7	62082	CYLINDER-HYDRAULIC 4 X 10" 3000	2
	301315	SEAL KIT FOR 62082 UNIVERSAL	
8	37705	HOSE: .50 X 128 8FJX-8MB	2
9	57676	HOSE: .50 X 031 8FJX-8FJX (6R/8R)	2
	1015221	HOSE: .50 X 040 8FJX-8FJX(12R)	
10	301105	HOSE: .50 X 043 8FJX-8FJX (6R/8R)	2
	35770	HOSE: .50 X 052 8FJX-8FJX (12R)	
11	58515	FTG-ELBOW: 8MB-8MJ-45	2

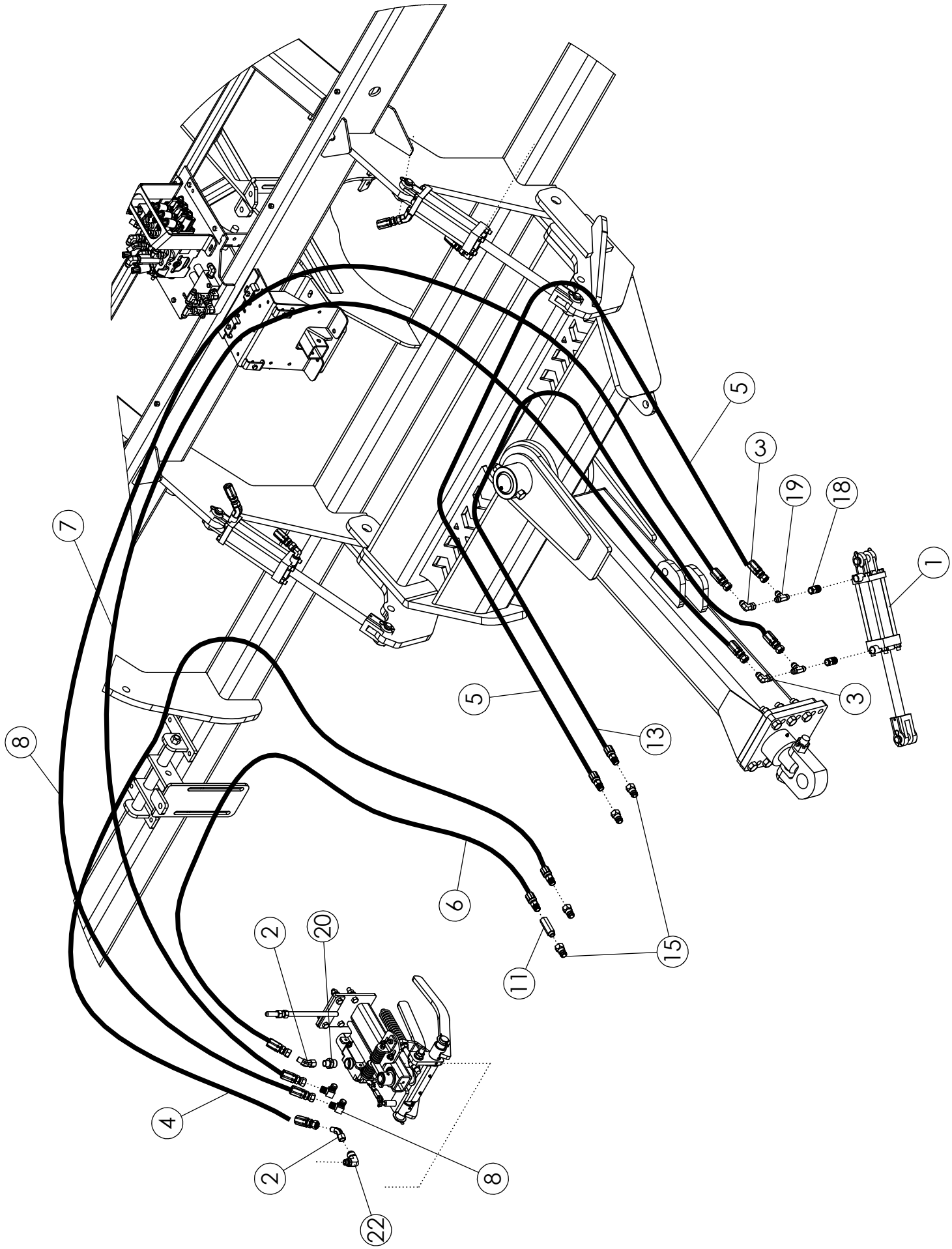
1
3
3
5
5
6
7
8
8
11
13
15
18
19
2
2
20
22
4

FRAME MOUNTED ROW FINDER HYDRAULICS

ITEM	PART NO.	DESCRIPTION	QTY
1	58891	CYLINDER-HYDRAULIC 4 X 8" 3000	1
	301315	SEAL KIT UNIVERSAL	
2	57663	FTG-ELBOW: 8MJ-8FJX-45	2
3	57668	FTG-ELBOW: 8MJ-8FJX 90	2
4	301642	HOSE: .50 X 322 8MB-8FJX	1
5	301645	HOSE: .50 X 215 8MB-8FJX	1
6	301641	HOSE: .50 X 314 8MB-8FJX	1
7	301644	HOSE: .50 X 295 8FJX-8FJX	1
8	301643	HOSE: .50 X 286 8FJX-8FJX	1
9	301647	HOSE: .50 X 143 8MB-8FJX	2
10	1015221	HOSE: .50 X 040 8FJX-8FJX(12R)	2
11	300070	CHECK VALVE 8MB-8FB FLOW F-->M (FC-08R)	1
12	1018115	HOSE: .50 X 030 8FJX-8FJX (12R)	2
13	301646	HOSE: .50 X 223 8MB-8FJX	1
14	301648*	HOSE: .38 X 160 8MB-6FJX (NOT SHOWN)	1
15	36290	PIONEER TIP 8010-15P (#8 ORB)	4
16	58195	FTG-ADAPTER: 10MB-8MJ	1
17	65901	FTG-ELBOW: 10MB-8MJ-90	1
18	56941	FTG-ADAPTER: 8MB-8FJX	2
19	57667	FTG-TEE: 8MJ-8MJ-8MJ	2
20	58195	FTG-ADAPTER: 10MB-8MJ	1
21	58560	FTG-ELBOW: 8MB-8MJ-90	2
22	57664	FTG-ELBOW: 12MP-8MJ-90	1

*USED WITH ADC VALVE CONTROL BOX

****IMPORTANT** ITEM 11 (PN: 300070-CHECK VALVE) MUST BE INSTALLED AS SHOWN PER THE DIAGRAM, TO PREVENT PREMATURE ROWFINDER VALVE FAILURE.**

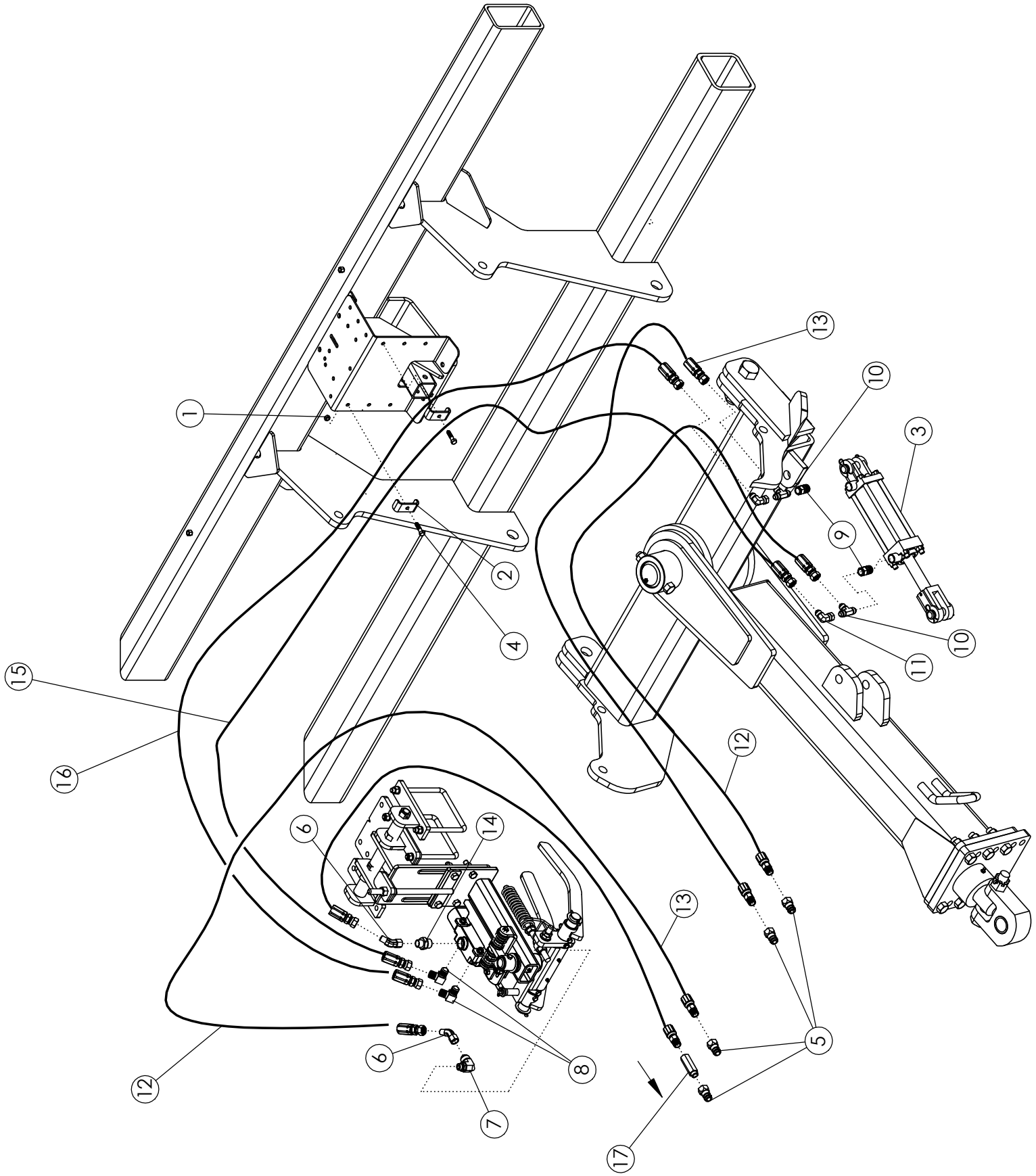
1
2
3
4
5
6
7
8
9
10
11
12
13
14
15
16
17

HITCH MOUNTED ROW FINDER HYDRAULICS			
ITEM	**PART NO.**	**DESCRIPTION**	**QTY**
1	1016999	NUT-TOPLOCK: .38 NC GR5 ZP	6
2	50714	CLAMP .50 ZP	6
3	58891	CYLINDER-HYDRAULIC 4 X 8" 3000	1
	301315	SEAL KIT FOR 58991 UNIVERSAL	
4	1011602	BOLT-HEX: .38 X 1.50 NC GR5 ZP	6
5	36290	PIONEER TIP 8010-15P (#8 ORB)	6
6	57663	FTG-ELBOW: 8MJ-8FJX-45	1
7	65901	FTG-ELBOW: 10MB-8MJ-90	2
8	58560	FTG-ELBOW: 8MB-8MJ-90	4
9	56941	FTG-ADAPTER: 8MB-8FJX	2
10	57667	FTG-TEE: 8MJ-8MJ-8MJ	4
11	57668	FTG-ELBOW: 8MJ-8FJX 90	2
12	300039	HOSE: .50 X 184 8MB-8FJX	2
13	66200	HOSE: .50 X 188 8MB-8FJX	2
14	58195	FTG-ADAPTER: 10MB-8MJ	1
15	57672	HOSE: .50 X 098 8FJX-8FJX	1
16	57673	HOSE: .50 X 096 8FJX-8FJX	1
17	300070	CHECK VALVE 8MB-8FB FLOW F-->M (FC-08R)	1

****IMPORTANT** ITEM 17 (PN: 300070-CHECK VALVE) MUST BE INSTALLED AS SHOWN PER DIAGRAM, TO PREVENT PREMATURE ROWFINDER VAVE FAILURE.**

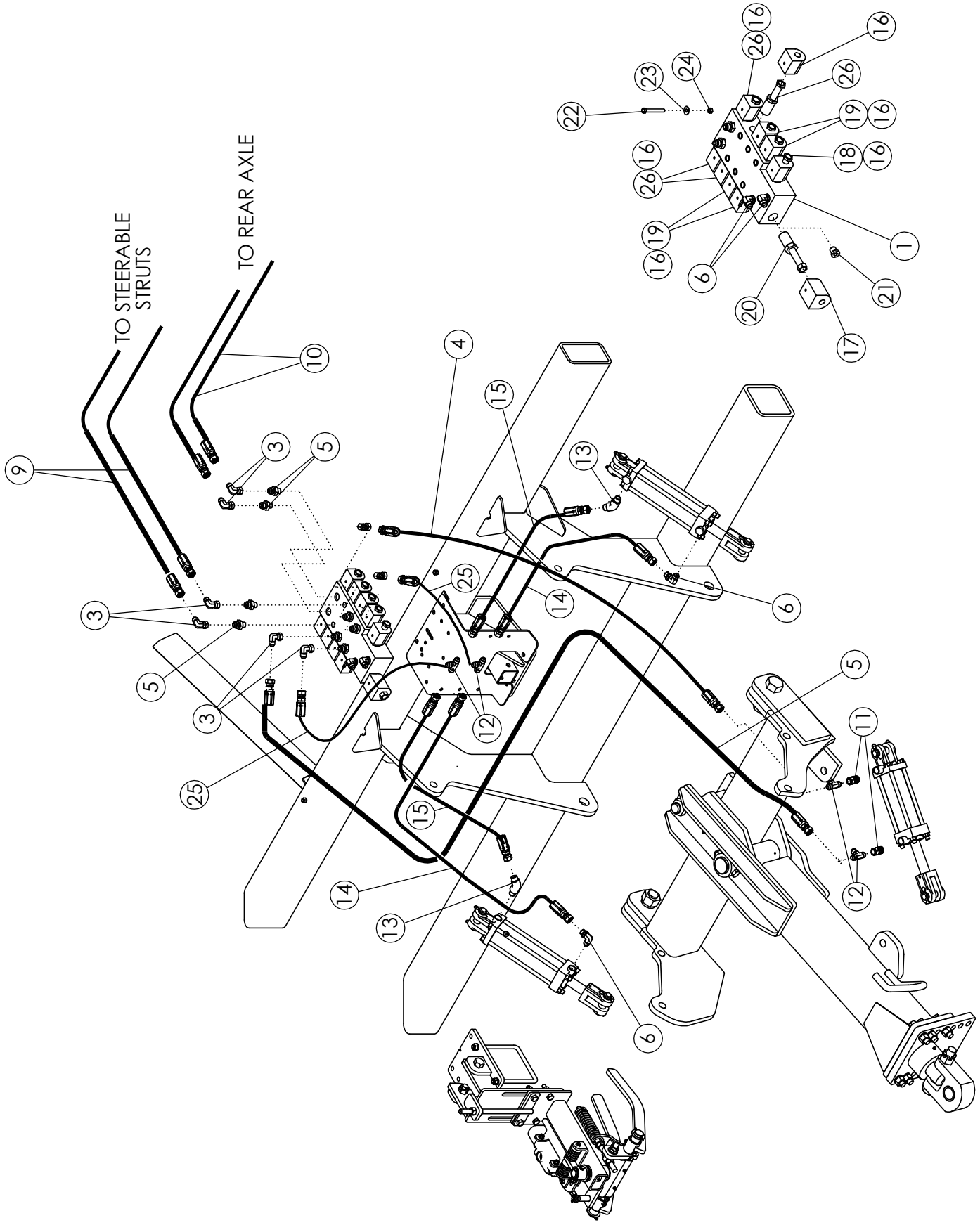
TO STEERABLE STRUTS
TO REAR AXLE
1
3
4
5
6
9
10
11
12
13
14
15
16
17
18
19
20
21
22
23
24
25
26

4 BANK VALVE W/TOGGLE

ITEM	PART NO.	DESCRIPTION	QTY
1	69426	VALVE-4 BANK W/TOGGLE CONTROL BOX	1
2	62024	FTG-ADAPTER: 6MB-8MJ	8
3	57668	FTG-ELBOW: 8MJ-8FJX-90	8
4	57012	HOSE: .50 X 058 8FJX-8FJX	1
5	64087	HOSE: .50 X 070 8FJX-8FJX	1
6	58560	FTG-ELBOW: 8MB-8MJ-90	2
7	301278	HARNESS-FASSE VALVE (4 BANK) (NOT SHOWN)	1
8	63362	ASSY-CONTROL BOX 4 BANK (NOT SHOWN)	1
9	64102	HOSE: .38 X 180 8FJX-8FJX	2
10	69737	HOSE: .38 X 240 8FJX-8FJX	2
11	56941	FTG-ADAPTER: 8MB-8FJX	2
12	57667	FTG-TEE: 8MJ-8MJ-8MJ	2
13	58515	FTG-ELBOW: 8MB-8MJ-45	2
14	1015221	HOSE: .50 040 8FJX-8FJX	2
15	1018115	HOSE: .50 X 030 8FJX-8FJX	2
16	301280	COIL-SMALL	8
17	301279*	COIL-LARGE	2
18	62866	CARTRIDGE	1
19	62867	CARTRIDGE	4
20	62868*	CARTRIDGE	1
21	301732*	PLUG-CAVITY	1
22	1019828	BOLT-HEX: .38 X 2.75 NC GR5 ZP	2
23	1011828	WASHER-FLAT: .38 ZP	8
24	1016999	NUT-TOPLOCK: .38 NC GR5 ZP	2
25	57677	HOSE: .38 X 021 8FJX-8FJX	2
26	69632	CARTRIDGE-FASSE DUAL POPPET	4

*IMPORTANT: VALVE (69426) IS SHIPPED OPEN CENTER. TO CONVERT TO CLOSED CENTER, REMOVE COIL AND CARTRIDGE (301279 & 62868) FROM THE END OF THE VALVE BODY AND REPLACE WIT CAVITY PLUG (301732) WHICH IS SUPPLIED WITH THE VALVE.

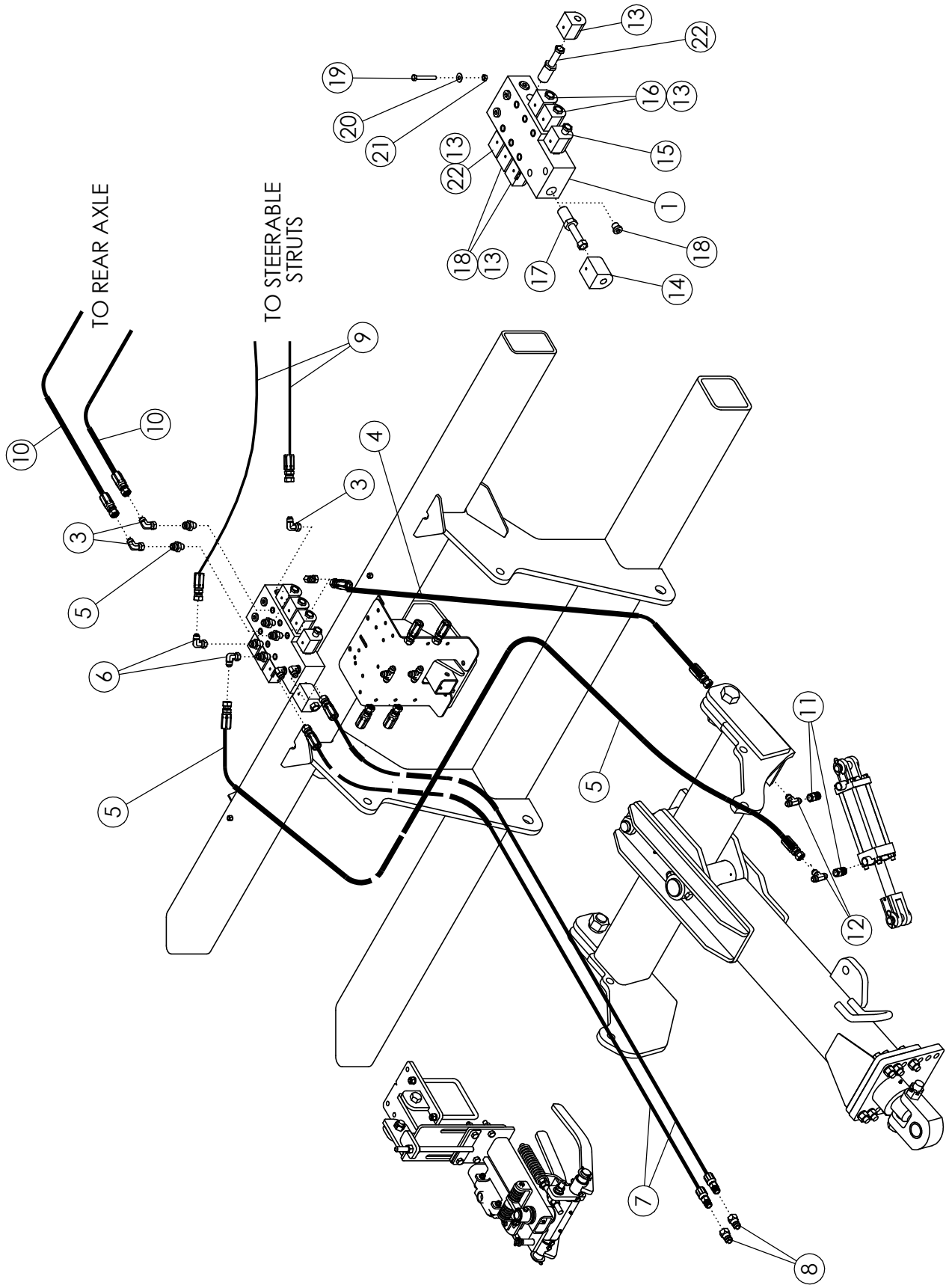
TO REAR AXLE
TO STEERABLE STRUTS
1
3
4
5
6
7
8
9
10
11
12
13
14
15
16
17
18
19
20
21
22

3 BANK VALVE W/TOGGLE

ITEM	PART NO.	DESCRIPTION	QTY
1	69425	VALVE-3BANK W/TOGGLE CONTROL BOX	1
2	62024	FTG-ADAPTER: 6MB-8MJ	6
3	57668	FTG-ELBOW: 8MJ-8FJX-90	6
4	57012	HOSE: .50 X 058 8FJX-8FJX	1
5	64087	HOSE: .50 X 070 8FJX-8FJX	1
6	58560	FTG-ELBOW: 8MB-8MJ-90	2
7	301735	HOSE: .50 X 112 8MB-8FJX	2
8	36290	PIONEER TIP 8010-15P (#8 ORB)	2
9	64102	HOSE: .38 X 180 8FJX-8FJX	2
10	69737	HOSE: .38 X 240 8FJX-8FJX (NON ADC)	2
	67520	FTG-CAP 8FJ (ADC ONLY)	
11	56941	FTG-ADAPTER: 8MB-8FJX	2
12	57667	FTG-TEE: 8MJ-8MJ-8MJ	2
13	301280	COIL-SMALL	6
14	301279*	COIL-LARGE	2
15	62866	CARTRIDGE	1
16	62867	CARTRIDGE	6
17	62868*	CARTRIDGE	1
18	301732*	PLUG-CAVITY	1
19	1019828	BOLT-HEX: .38 X 2.75 NC GR5 ZP	2
20	1011828	WASHER-FLAT: .38 ZP	8
21	1016999	NUT-TOPLOCK: .38 NC GR5 ZP	2
22	69632	CARTRIDGE-FASSE DUAL POPPET	2
23	301277	HARNESS-FASSE VALVE (3 BANK) (NOT SHOWN)	1

*IMPORTANT: VALVE (69425) IS SHIPPED OPEN CENTER. TO CONVERT TO CLOSED CENTER, REMOVE COIL AND CARTRIDGE (301279 & 62868) FROM THE END OF THE VALVE BODY AND REPLACE WITH CAVITY PLUG (301732) WHICH IS SUPPLIED WITH

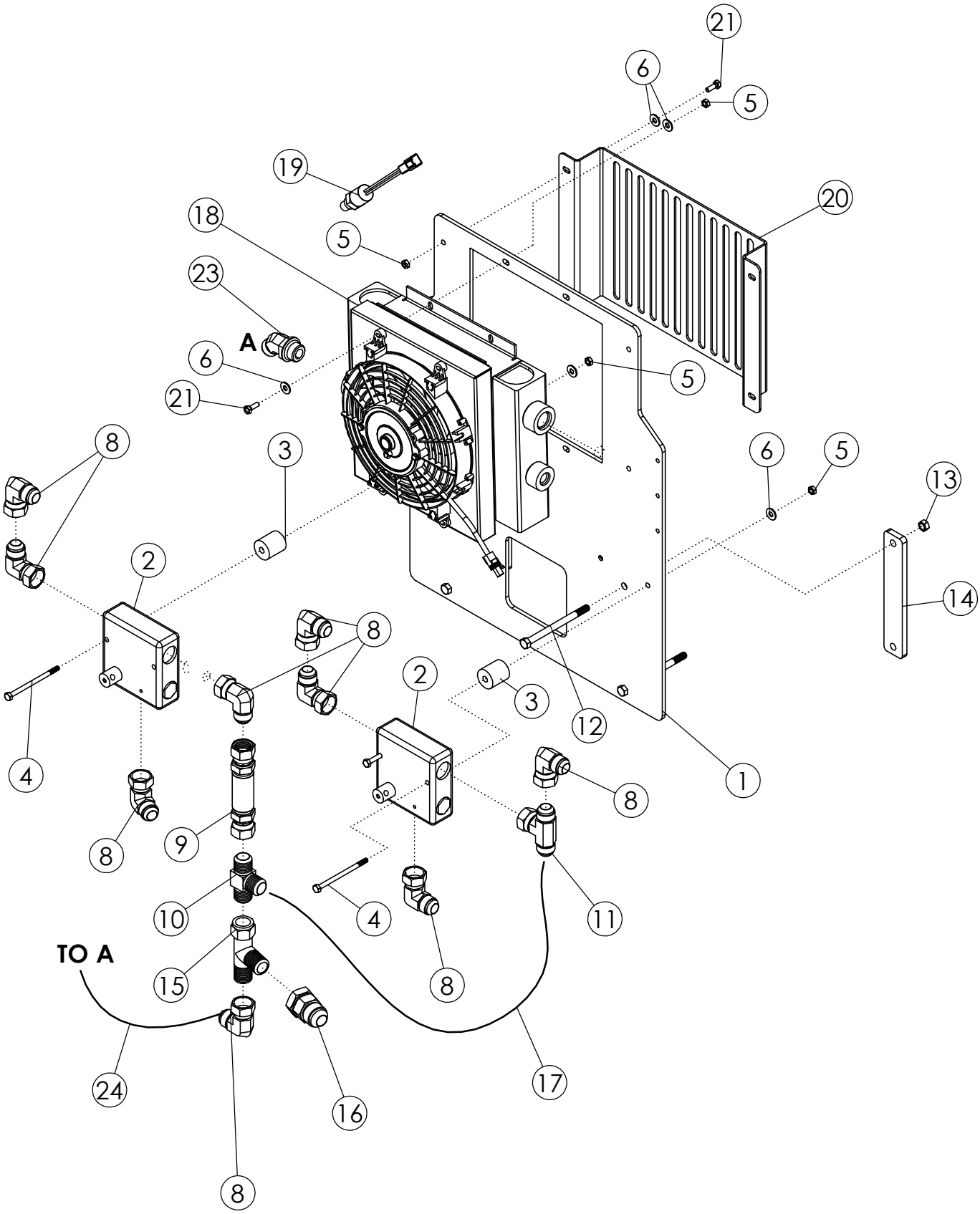
21
6
5
19
20
18
5
23
A
6
5
21
8
3
6
5
13
2
14
8
2
3
12
4
1
8
8
9
10
4
11
TO A
15
8
24
16
17
8

VALVE GROUP ASSY

ITEM	PART NO.	DESCRIPTION	QTY
1	301187	BRACKET-FLOW CONTROL 12RW	1
2	301266	VALVE-FLOW CONTROL- 3/4" FP	2
	301375	SEAL KIT FOR 301266	
3	59463	SPACER	4
4	1030776	BOLT-HEX: .25 X 6.00 NC GR5	4
5	1030946	NUT-TOPLOCK: .25 NC GR5 ZP	12
6	1020416	WASHER-FLAT: .25 ZP	24
7	65918	FTG-ADAPTER: 12MB-12MJ	7
8	59041	FTG-ELBOW 12MJ-12FJX-90	9
9	63471	ASSY-TUBE LINE .75 X 5.25 0-0	1
10	58986	FTG-TEE: 12MJ-12MJ-12MJ	2
11	59053	FTG-TEE 12MJ-12MJ-12FJX	1
12	1021757	BOLT-HEX: .38 X 5.00 NC GR5 ZP	4
13	1016999	NUT-TOPLOCK: .38 NC GR5 ZP	4
14	73601	PLATE-BOLTING 7INCH TUBE	2
15	59888	FTG-TEE: 12MJ-12FJX-12MJ	1
16	300246	FTG-ADAPTER: 12FJ-6MJ	1
17	63473	HOSE: .75 X 019 12FJX-12FJX	1
18	301255	COOLER-AIR/HYD OIL	1
19	301256	SWITCH-TEMP OIL COOLER	1
20	301265	PLATE-SHIELD COOLER	1
21	1011595	BOLT-HEX: .25 X .75 NC GR5 ZP	8
22	301262	HARNESS-COOLER 12R WHEEL (NOT SHOWN)	1
23	63699	FTG-ELBOW 12MB-12MJ-45	1
24	59034	HOSE: .75 X 030 12FJX-12FJX	1

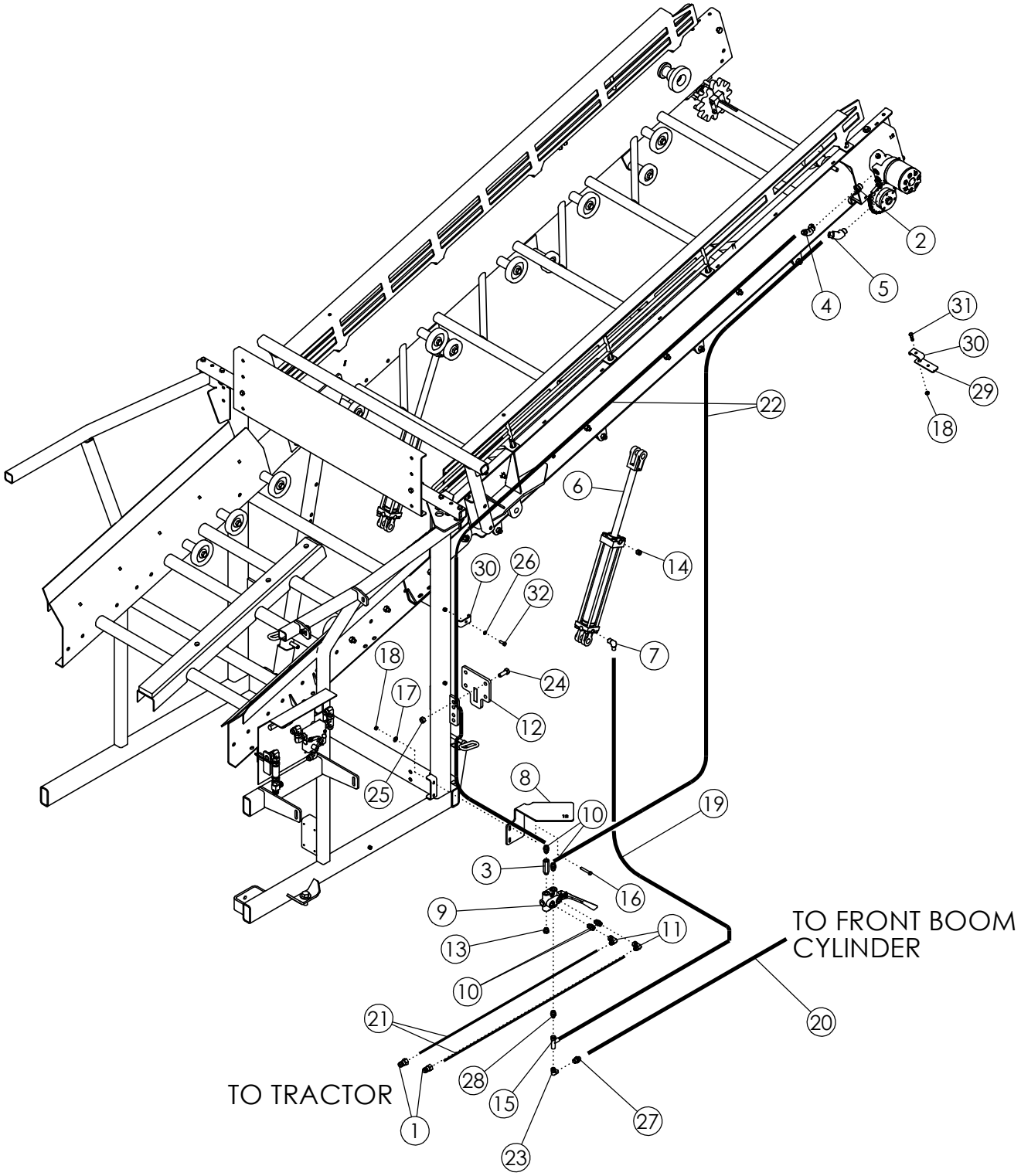
2
5
4
31
30
29
18
22
6
14
30
26
32
7
18
24
17
12
25
8
10
19
3
16
9
11
13
10
TO FRONT BOOM
CYLINDER
20
21
28
15
27
TO TRACTOR
1
23

TANK HYDRUALICS

ITEM	PART NO.	DESCRIPTION	QTY
1	36290	PIONEER TIP 8010-15P (#8 ORB)	2
2	300069	FTG-ADAPTER: 8FB-10MB	1
3	300070	VALVE-CHECK: 8MB-8FB FLOW F-->M (FC-08R)	1
4	58515	FTG-ELBOW: 8MB-8MJ-45	1
5	56229	FTG-ELBOW: 10MB-8MJ-45	1
6	58889	CYLINDER-HYD 2.5 X 16	2
	301313	SEAL KIT FOR 58889 UNIVERSAL	
7	58557	FTG-ELBOW: 8MB-6MJ 90	2
8	72469	GUARD-SELECTOR VALVE PAINTED	1
9	58470	VALVE-SELECTOR PAINTED	1
10	56226	FTG-ADAPTER: 8MB-8MJ	4
11	57668	FTG-ELBOW: 8MJ-8FJX 90	2
12	301298	WLDMT-CYLINDER LUG	2
13	56190	FTG-PLUG: 8MB	1
14	58547	FTG-PLUG: 8MB BREATHER	2
15	56231	FTG-TEE: 6MJ-6FJX-6MJ	1
16	59390	BOLT-HEX: .38 X 2.25 NC GR5 ZP	2
17	1011828	WASHER-FLAT: .38 ZP	2
18	1016999	NUT-TOPLOCK: .38 NC GR5 ZP	6
19	56234	HOSE: .38 X 28 6FJX-6FJX	1
20	56233	HOSE: .38 X 086 6FJX-6FJX	1
21	301849	HOSE: .50 X 380 8FJX-8MB	2
22	58378	HOSE: .50 X 182 8FJX-8FJX	2
23	57897	FTG-ELBOW: 6MJ-6FJX-90	1
24	1013918	BOLT-HEX: .63 X 1.75 NC GR5 ZP	8
25	1016595	NUT-TOPLOCK: .63 NC GR5 ZP	8
26	1011586	WASHER-LOCK: .38 ZP	13
27	300072	FTG-RESTRICTOR (6MJ-6FJ R 1/16)	1
28	66624	FTG-ADAPTER: 6MJ-8MB	1
29	54825	BRACKET-HOSE ZP	3
30	50714	CLAMP .50 ZP	17
31	1011602	BOLT-HEX: .38 X 1.50 NC GR5 ZP	4
32	1011600	BOLT-HEX: .38 X 1.00 NC GR5 ZP	13

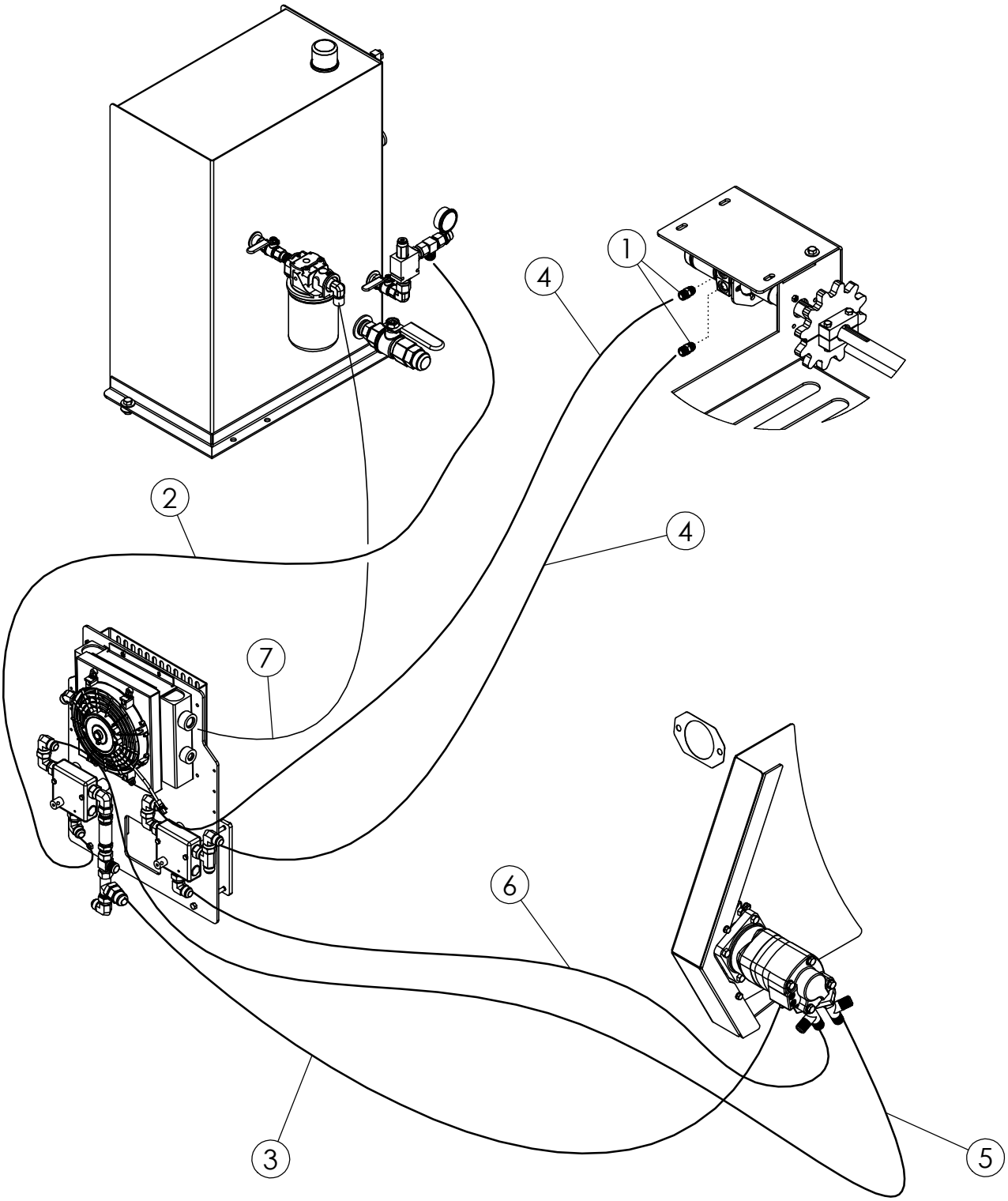
1
2
3
4
4
5
6
7

WHEEL HYDRAULICS

ITEM	PART NO.	DESCRIPTION	QTY
1	59043	FTG-ADAPTER: 10MB-12MJ	2
2	300172	HOSE: .75 X 103 12FJX-12FJX	1
3	300247	HOSE: .38 X 420 6FJX-6FJX	1
4	300176	HOSE: .75 X 243 12FJX-12FJX	2
5	300171	HOSE: .75 X 420 12FJX-12FJX	1
6	300174	HOSE: .75 X 402 12FJX-12FJX	1
7	300177	HOSE: .75 X 074 12FJX-12FJX	1

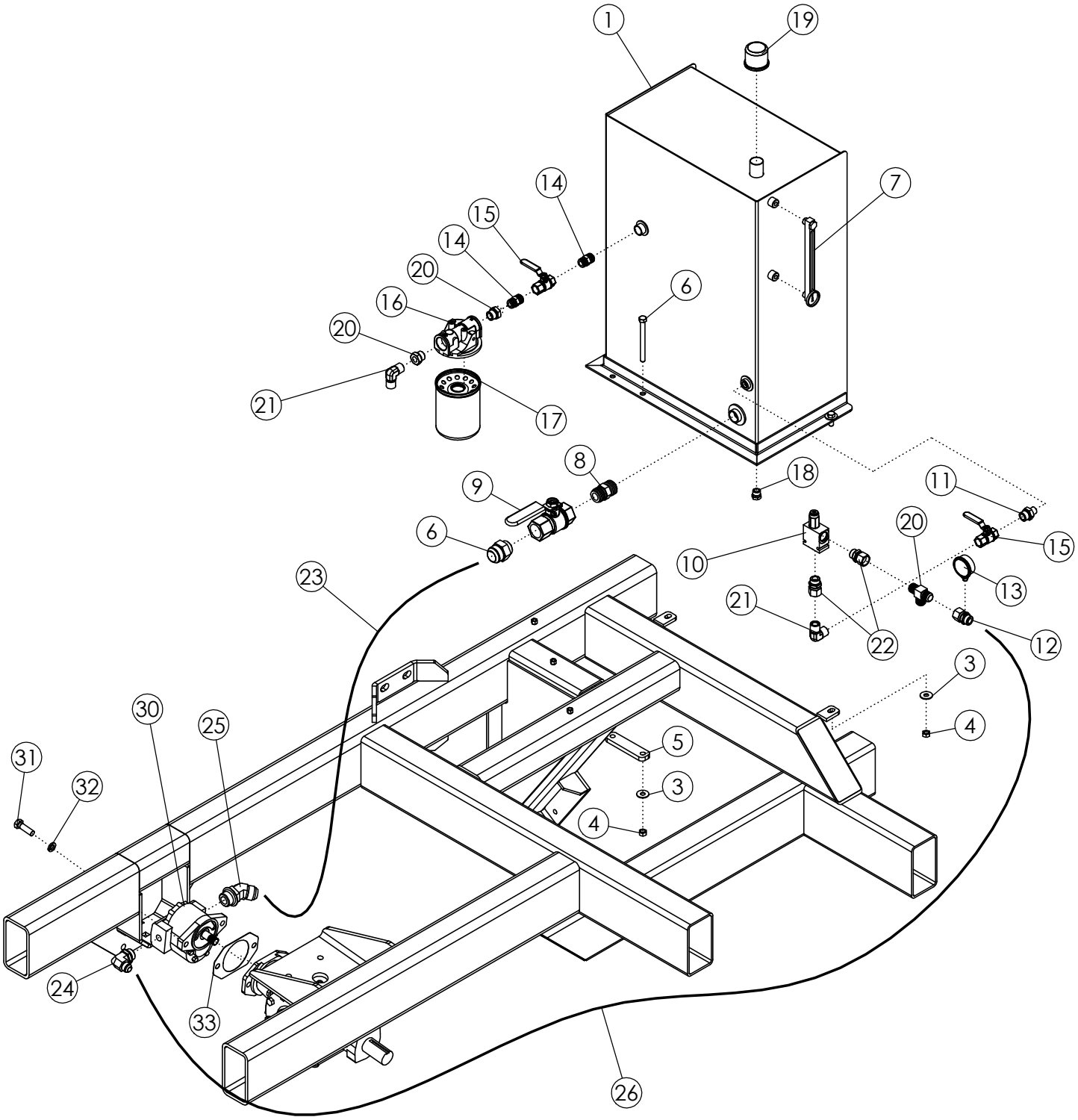
1
19
7
14
15
14
20
16
20
6
21
17
8
18
9
6
11
20
15
10
13
21
22
12
23
3
4
30
25
5
31
32
3
4
24
33
26

HYDRAULIC TANK

ITEM	PART NO.	DESCRIPTION	QTY
1	58079	HYDRAULIC TANK-PAINTED	1
2	1011606	BOLT-HEX: .50 X 1.25 NC GR5 ZP	2
3	1014443	WASHER-FLAT: .50 ZP	6
4	1027461	NUT-TOPLOCK: .50 NC GR5 ZP	4
5	58204	BAR - BOLTING	1
6	300211	FTG-ADAPTER: 20MP-24MJ	1
7	58914	GAUGE-LEVEL & TEMP	1
8	58978	FTG-ADAPTER: 20MP-20MP	1
9	58979	VALVE-BALL: 20FP-20FP	1
10	301251	VALVE-RELIEF 2800PSI	1
11	58466	FTG-ADAPTER: 12MP-8MP	1
12	301173	FTG-ADAPTER: 12MJ-12FJX W/4FB	1
13	301175	GAUGE-PRESSURE: 1/4" MB 3000PSI	1
14	58196	FTG-ADAPTER: 12MP-12MP	2
15	59165	VALVE-BALL 3/4FP - 3/4FP	2
16	301253	FILTER HEAD 5"	1
17	301254	FILTER-HYDRAULIC 5" 10 MICRON	1
18	55718	FTG-PLUG: 8MB	1
19	58197	CAP-FILLER	1
20	301196	PIPE-BUSHING: 20MP-12FP	2
21	59044	FTG-ELBOW: 12MP-12MJ 90	2
22	66249	FTG-ADAPTER: 12MB-12FJX	1
23	300178	HOSE: 1.50 X 058 24FJX-24FJX(200PSI)	1
24	64061	FTG-ELBOW: 16MB-12MJ-90	1
25	300212	FTG-ELBOW: 24MB-24MJ-45	1
26	300177	HOSE: .75 X 074 12FJX-12FJX	1
27	62964	DECAL-WARNING	1
28	64428	DECAL-HYD TANK SPECS	1
29	64429	DECAL-WARNING BALL VALVE	1
30	301250	PUMP-HYDRAULIC 6.30 (3500 PSI)	1
	301257	SEAL KIT FOR 301250	
31	1011623	BOLT-HEX: .63 X 2.00 NC GR5 ZP	2
32	1011813	WASHER-LOCK: .63 ZP	2
33	301066	PLATE-ADAPT SAE C PUMP	1

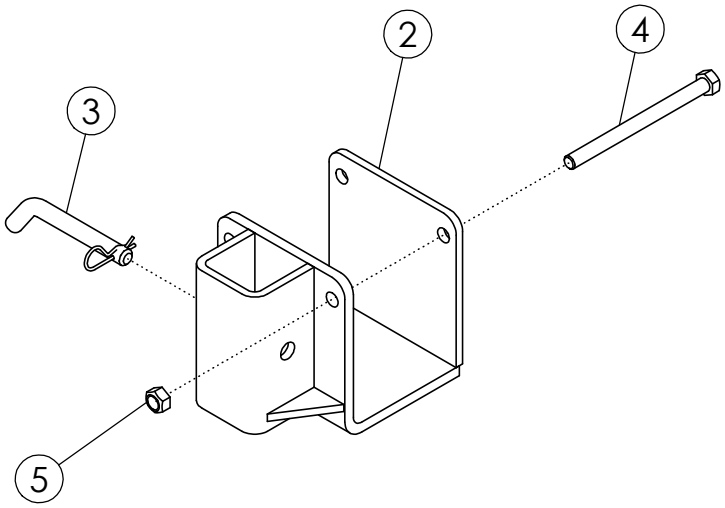
2
4
3
5

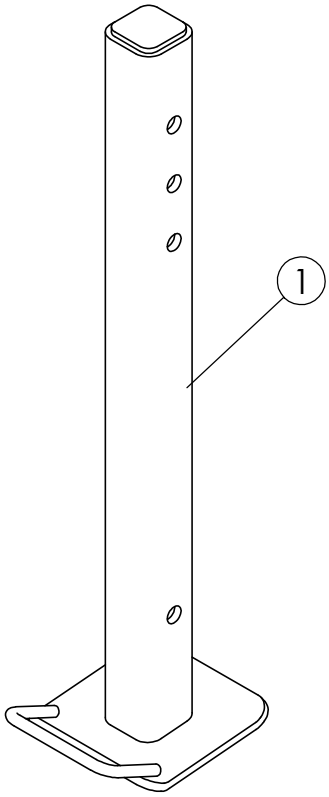
1

HARVESTER STAND #63397			
ITEM	**PART NO.**	**DESCRIPTION**	**QTY**
1	63382	WLDMT-STAND SUPPORT	1
2	63377	WLDMT-STAND MOUNT	1
3	63407	PIN-BENT	1
4	1018957	BOLT-HEX: .63 X 8.00 NC GR5 ZP	2
5	1016595	NUT-TOPLOCK: .63 NC GR5 ZP	2

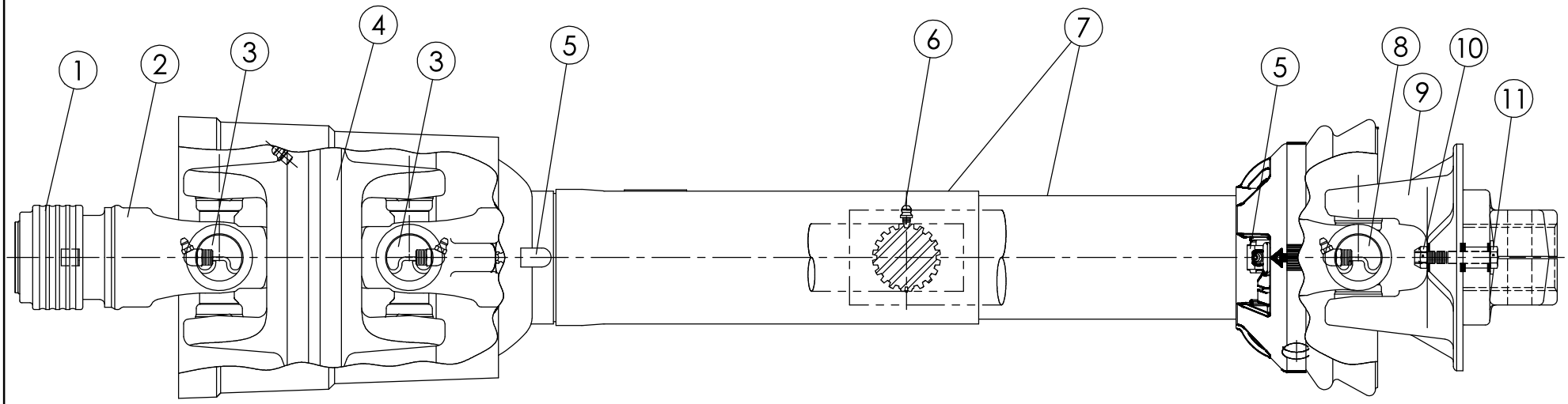
1
2
3
4
3
5
6
7
5
8
9
10
11

PTO CV DRIVELINE #301558

1.75" - 20 SPLINE

ITEM	PART NO.	DESCRIPTION	QTY
1	62123	KT-SAFETY SLIDE LOCK REPAIR 1.750"	1
2	305902	YOKE ASSY-SAFETY SLIDE LOCK 1.750" CAT 6 CV	1
3	301841	KT-CROSS & BEARING CAT 6	2
4	305904	HOUSING-CV CENTER ASSY CAT 6	1
5	64398	KT-NYLON REPAIR UNIVERSAL	2
6	54161	ZERK-DRIVE LUBE FTG (PRESSED IN)	4
7	301559	GUARD SET-CV PTO HRV MAX 90" EXT.	1
8	54172	KT-CROSS & BEARING 35E SERIES	1
9	57286	ASSY-BALL SHEAR HRV	1
10	1030700	NUT-TOPLOCK: .31 NC GR5 ZP	1
11	1011285	BOLT-HEX: .31 X 2.00 NC GR5 ZP	1

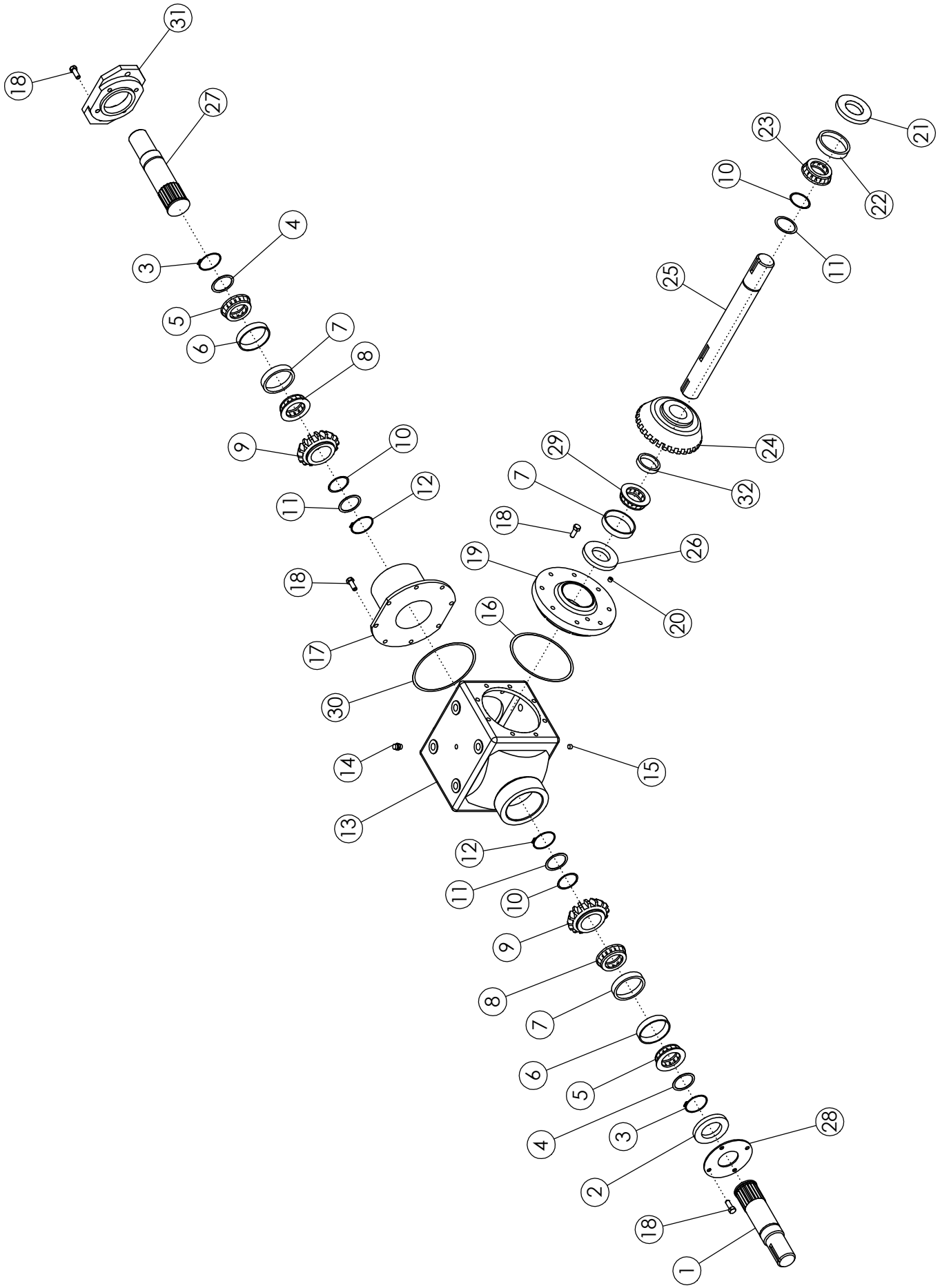
31
18
27
3
4
5
6
7
8
9
10
11
12
18
17
30
14
13
12
11
10
9
8
7
6
5
4
3
2
18
1
28
16
15
19
20
18
7
29
26
32
24
25
11
10
23
22
21

GEARBOX (1.82:1) #300142 - 4 WAY

ITEM	PART NO.	DESCRIPTION	QTY
1	69203	QUILL SHAFT	1
2	62744	SEAL: Ø1.75 X .313	1
3	69218	SNAP RING	2
4	69219	WASHER	2
5	69220	BEARING CONE	2
6	69221	BEARING CUP	2
7	69222	BEARING CUP	3
8	69223	BEARING CONE	2
9	69224	GEAR - 17T	2
10	69225	SHIM	3
11	68598	WASHER	3
12	62724	SNAP RING	2
13	69202	CASE-1000 SERIES	1
14	64408	VENT PLUG: .50 NPT (SQ. HD.)	1
15	62735	PLUG: .50 NPT	1
16	62736	SHIM-COVER	1
17	301182	QUILL HOUSING	1
18	1011600	BOLT-HEX: .38 X 1.00 NC GR5 ZP	24
19	69234	COVER	1
20	69227	PLUG: .25 NPT	1
21	62722	SEAL: Ø2.00 X 3.263	1
22	62727	BEARING CUP	1
23	62728	BEARING CONE	1
24	69228	GEAR - 31T	1
25	69229	THRU SHAFT	1
26	69230	SEAL-OIL	1
27	301183	QUILL SHAFT	1
28	69217	COVER	1
29	69232	BEARING CONE	1
30	69233	GASKET	1
31	301184	FLANGE SAE 'C'- 2	1
32	302320	SPACER Ø2.25 X .75	1
SHIMS USE AS NEEDED			
	64457	SHIM COVER	
	64461	SHIM: 1.375 ID X .007	
	62730	SHIM: 1.75 ID X .007	
	69225	SHIM: 2.75 OD X .007	
	62736	SHIM COVER	
	301622	SHIM: 3.00 OD X 2.25 ID	
	301492	SHIM	

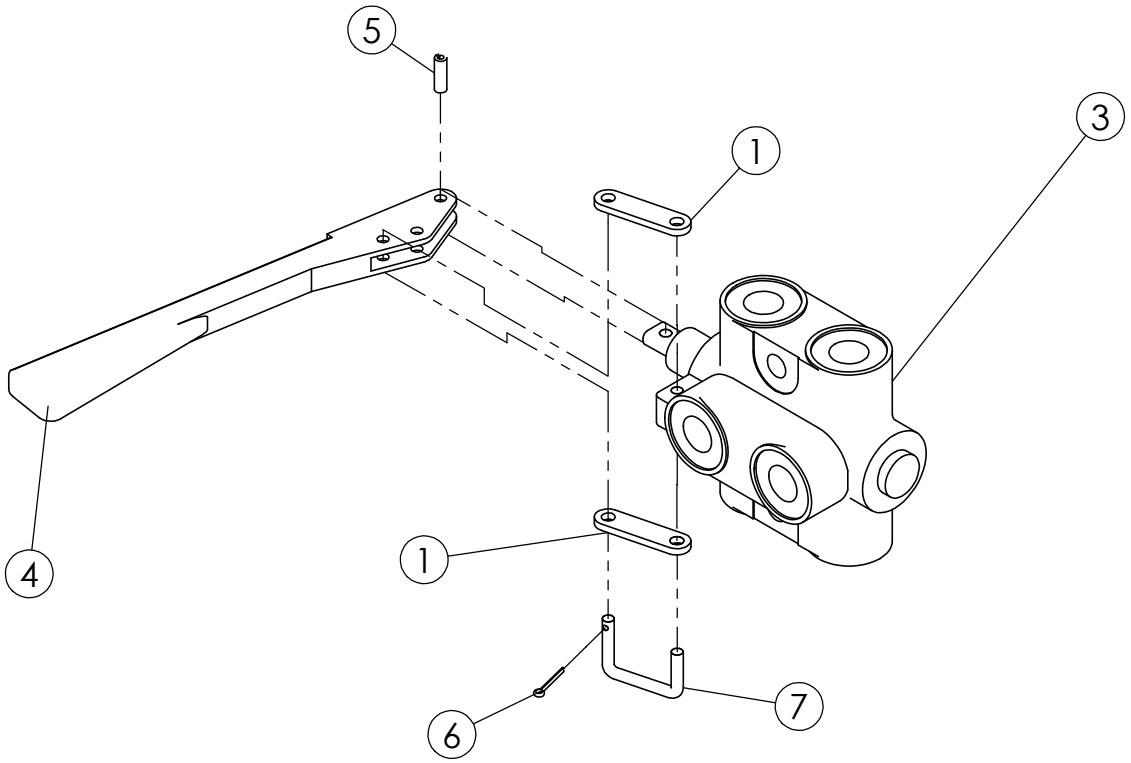
5
1
3
4
1
6
7

SELECTOR VALVE #58470			
ITEM NO.	PART NO.	DESCRIPTION	QTY.
1	68060	PLATE ZP	2
3	53724	VALVE-SELECTOR	1
4	58470-2	HANDLE	1
5	58470-4	SPRING PIN	1
6	58470-5	PIN-COTTER HANDLE	1
7	58470-3	CLIP-HANDLE	1

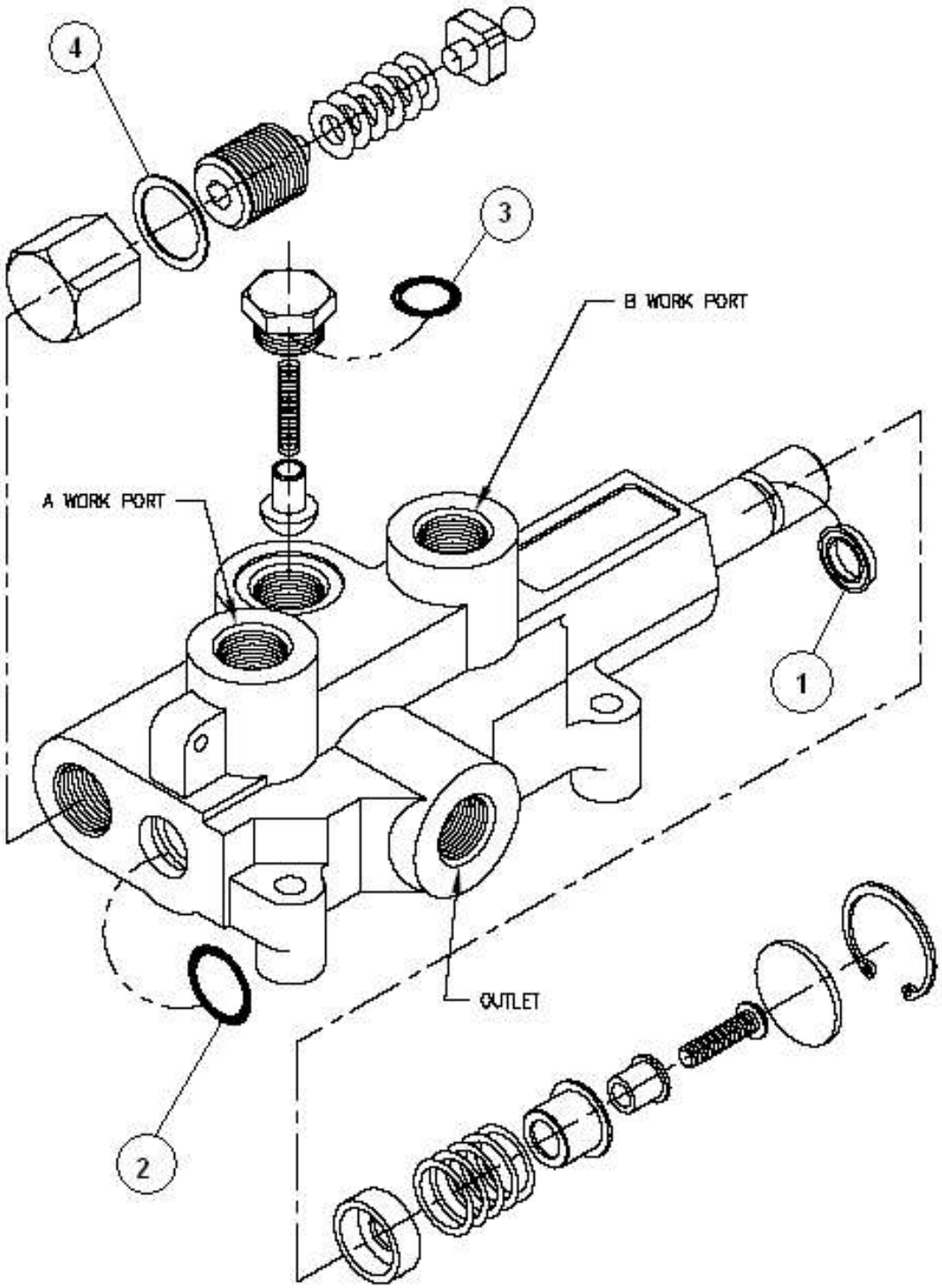
4
3
B WORK PORT
A WORK PORT
1
OUTLET
2

ROW FINDER VALVE #301150

ITEM	PART NO.	DESCRIPTION	QTY
	62757	**SEAL KIT**	
1		U-CUP	1
2		O-RING	1
3		O-RING	1
4		ALUMINUM WASHER	1

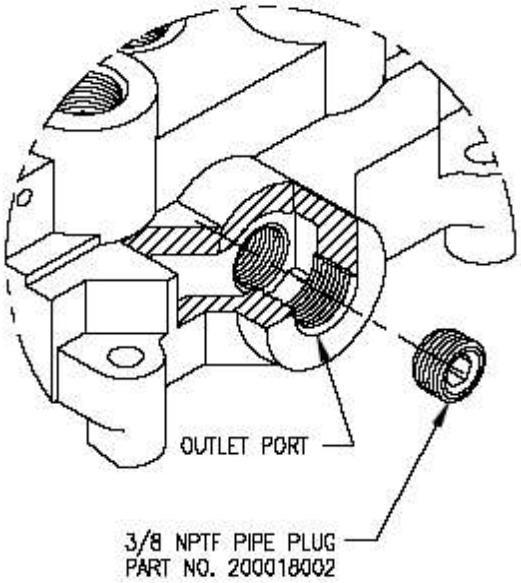

OPEN CENTER TO CLOSED CENTER CONVERSION

THIS FEATURE ALLOWS AN OTHERWISEOPEN CENTER VALVE TO BE CONVERTED TO CLOSED CENTER OPERATION. AS SHOWN ABOVE, A 3/8 NPTF PIPE PLUG IS INSTALLED IN THE BOTTOM OF THE OUTLET PORT TO BLOCK OPEN CENTER PASSAGE. A PIPE THREAD SEALANT SHOULD BE USED. THIS FEATURE IS STANDARD ON ALL VALVES WITH 3/4 NPTF INLET AND OUTLET PORTS. THE PIPE PLUG IS INCLUDED WITH THESE MODELS. DISCARD THE PIPE PLUG IF THE VALVE IS USED ON AN OPEN CENTER APPLICATION.

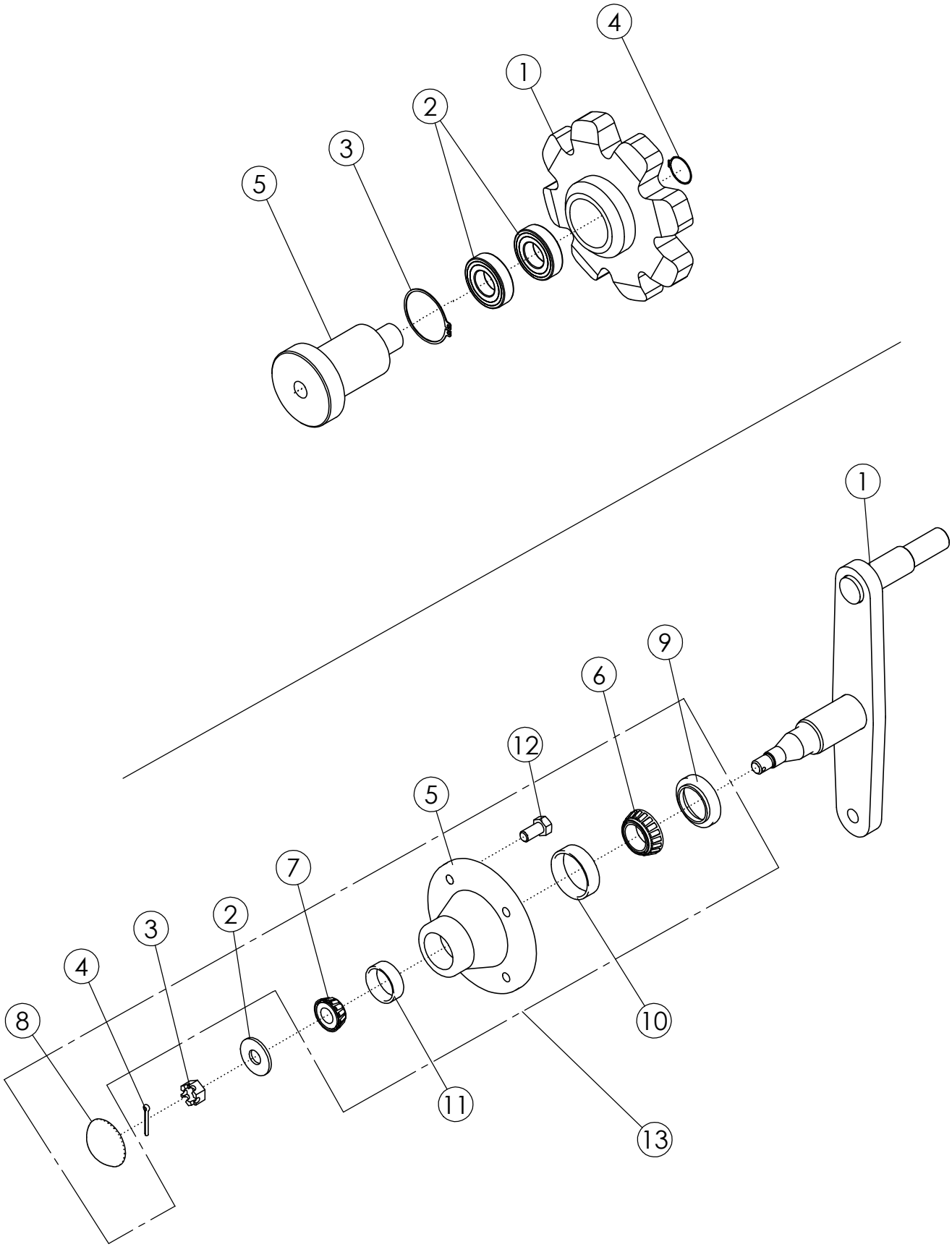
4
1
2
3
5
1
9
6
12
5
7
2
3
4
8
10
11
13

SPROCKET #54824			
ITEM	**PART NO.**	**DESCRIPTION**	**QTY**
1	56893	SPROCKET 56MM 8T	1
2	54108	BEARING-ROLLER	2
3	54151	SNAP RING SR11	1
4	54154	SNAP RING SR3	1
5	56892	STUB SHAFT	1

BELT TIGHTENER #72749			
ITEM	**PART NO.**	**DESCRIPTION**	**QTY**
1	72748	WLDMT-REAR IDLER	1
2	1013623	BUSHING-MACH .63 NP	2
3	1013625	NUT-SLOTTED .63 NF GR5 ZP	1
4	1013626	PIN-COTTER: .16 X 1.25 ZP	1
5	1017103*	HUB-MACHINING	1
6	52245*	CONE BEARING	1
7	1013620*	CONE BEARING	1
8	1013622*	HUB CAP	1
9	1029527*	SEAL	1
10	1012360*	CUP-BEARING: LM 67010	1
11	1013268*	CUP-BEARING LM11910	1
12	54646*	1025393 LUG BOLT .5 X 1.0	4
13	56951	ASSY HUB	1

* Items are included in item 13

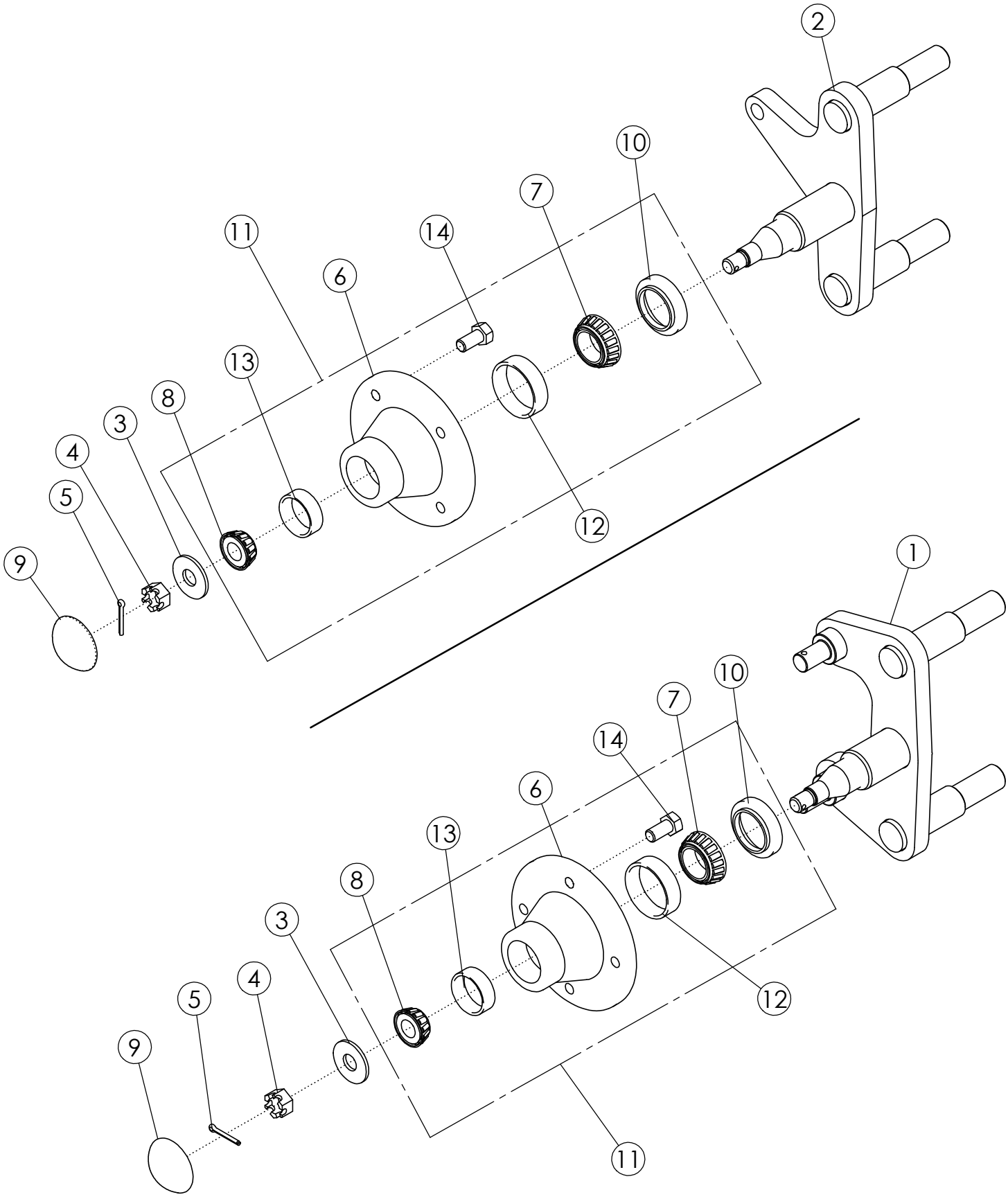
2
10
7
11
14
6
13
8
3
4
5
9
12
1
10
7
14
6
13
8
3
4
5
9
12
11

BELT TIGHTENER #72058 & #72753			
ITEM	**PART NO.**	**DESCRIPTION**	**QTY**
1	72059	WLDMT-SPINDLE	1
2	72752	WLDMT-SPINDLE	1
3	1013623	BUSHING-MACH .63 NP	1
4	1013625	NUT-SLOTTED .63 NF GR5 ZP	1
5	1013626	PIN-COTTER: .16 X 1.25 ZP	1
6	1017103*	HUB	1
7	52245*	CONE BEARING	1
8	1013620*	CONE BEARING	1
9	1013622*	HUB CAP	1
10	1029527*	SEAL	1
11	56951	ASSY HUB	1
12	1012360*	CUP-BEARING: LM 67010	1
13	1013268*	CUP-BEARING LM11910	1
14	54646*	1025393 LUG BOLT .5 X 1.0	4

* Items are included in item 11

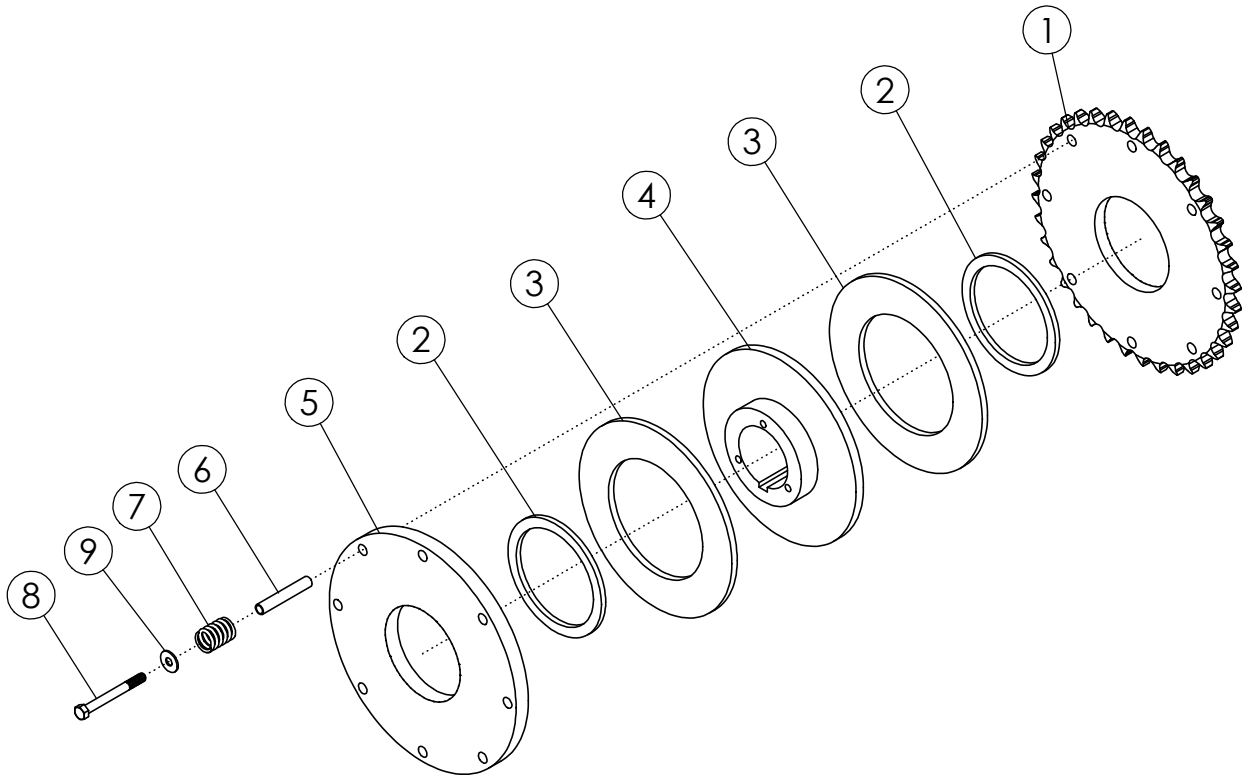
1
2
3
4
3
2
5
6
7
9
8

SLIP CLUTCH/SPROCKET #72030			
ITEM	PART NO.	DESCRIPTION	QTY
1	72986	SPROCKET	1
2	58208	BUSHING-BRONZE	2
3	58216	DISC-FIBER	2
4	58210	HUB-CLUTCH	1
5	58212	PLATE-SLIP CLUTCH	1
6	301701	TUBE-SLIP CLUTCH (2.38)	6
7	58174	SPRING-SLIP CLUTCH	6
8	1013239	BOLT-HEX: .38 X 3.00 NC GR5 ZP	6
9	1011828	WASHER-FLAT: .38 ZP	6

SLIP CLUTCH/SPROCKET #58335			
ITEM	PART NO.	DESCRIPTION	QTY
1	58566	SPROCKET	1
2	58208	BUSHING-BRONZE	2
3	58216	DISC-FIBER	2
4	58210	HUB-CLUTCH	1
5	58212	PLATE-SLIP CLUTCH	1
6	301701	TUBE-SLIP CLUTCH (2.38)	6
7	58174	SPRING-SLIP CLUTCH	6
8	1013239	BOLT-HEX: .38 X 3.00 NC GR5 ZP	6
9	1011828	WASHER-FLAT: .38 ZP	6

SLIP CLUTCH/SPROCKET #57993			
ITEM	PART NO.	DESCRIPTION	QTY
1	58177	SPROCKET	1
2	58207	BUSHING-BRONZE	2
3	58215	DISC-FIBER	2
4	58209	HUB-CLUTCH	1
5	58211	PLATE-SLIP CLUTCH	1
6	58213	TUBE-SLIP CLUTCH (2.38)	6
7	58174	SPRING-SLIP CLUTCH	6
8	58176	BOLT-HEX: .38 X 3.50 NC GR5 ZP	6
9	1011828	WASHER-FLAT: .38 ZP	6

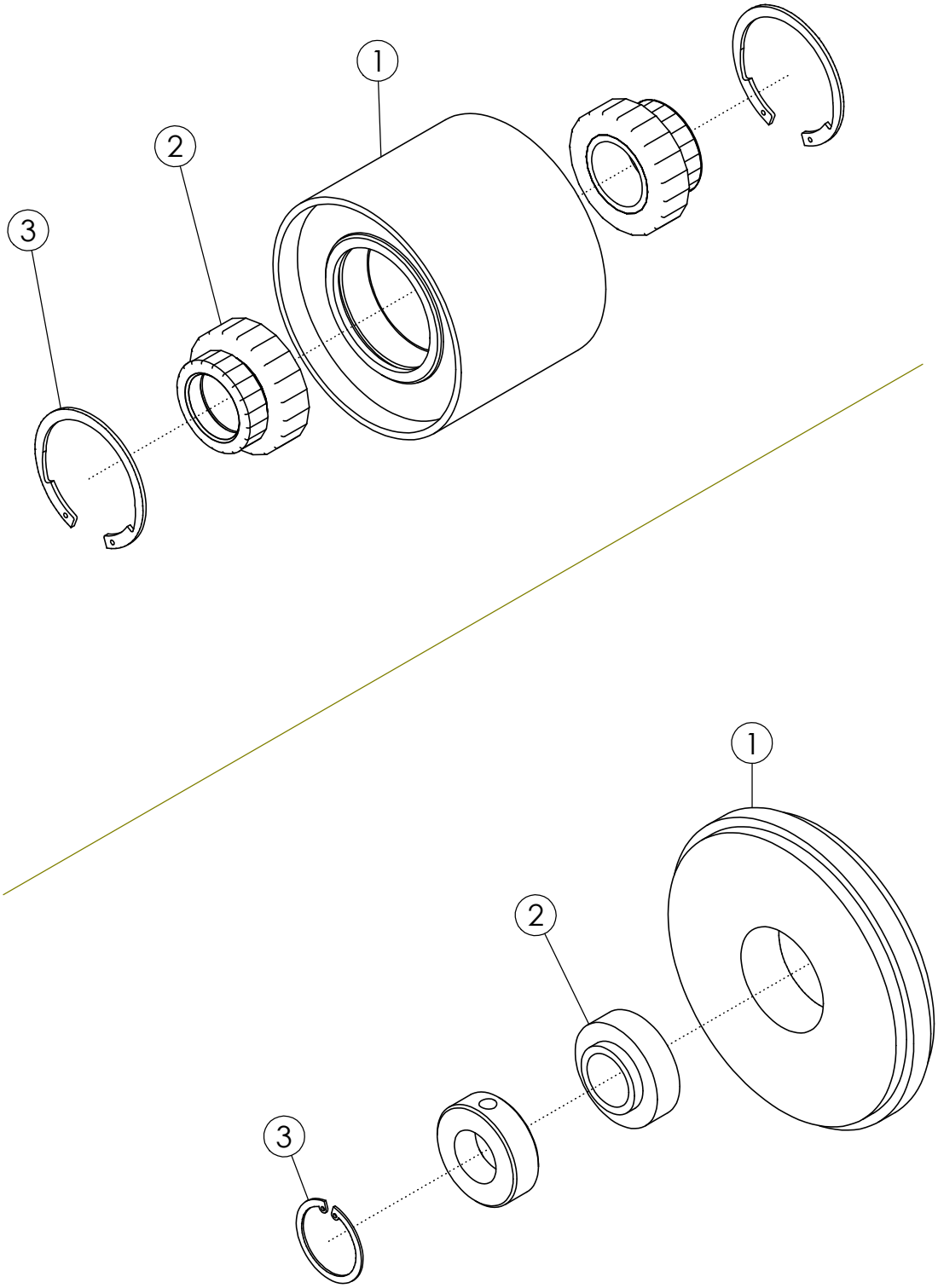
1
2
3
1
2
3

IDLER PULLEY #56406			
ITEM	**PART NO.**	**DESCRIPTION**	**QTY**
1	56405	WLDMT-PULLEY	1
2	56399	BALL BEARING 1.75	2
3	56400	RETAINING RING	2

SPROCKET IDLER #56851			
ITEM	**PART NO.**	**DESCRIPTION**	**QTY**
1	56851	IDLEMASTER 8.50 X 1.44	1
2	58806*	BEARING-IDLER	1
3	58805*	SNAP-RING	1

* COMES WITH ITEM 4

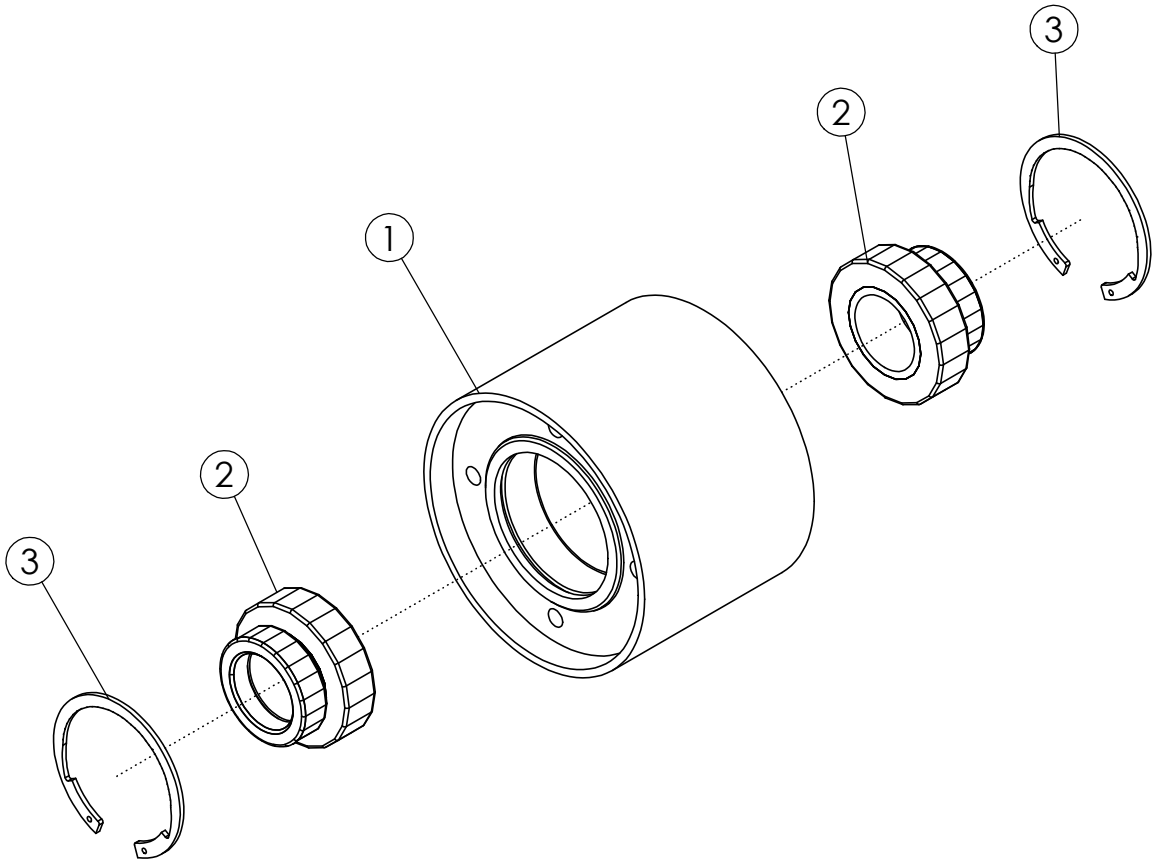
3
2
1
2
3

REVERSE PULLEY #301821			
ITEM	**PART NO.**	**DESCRIPTION**	**QTY**
1	301847	WLDMT-REVERSE PULLEY	1
2	56399	BALL-INSERT 1-3/4"	2
3	56400	RETAINING RING	2

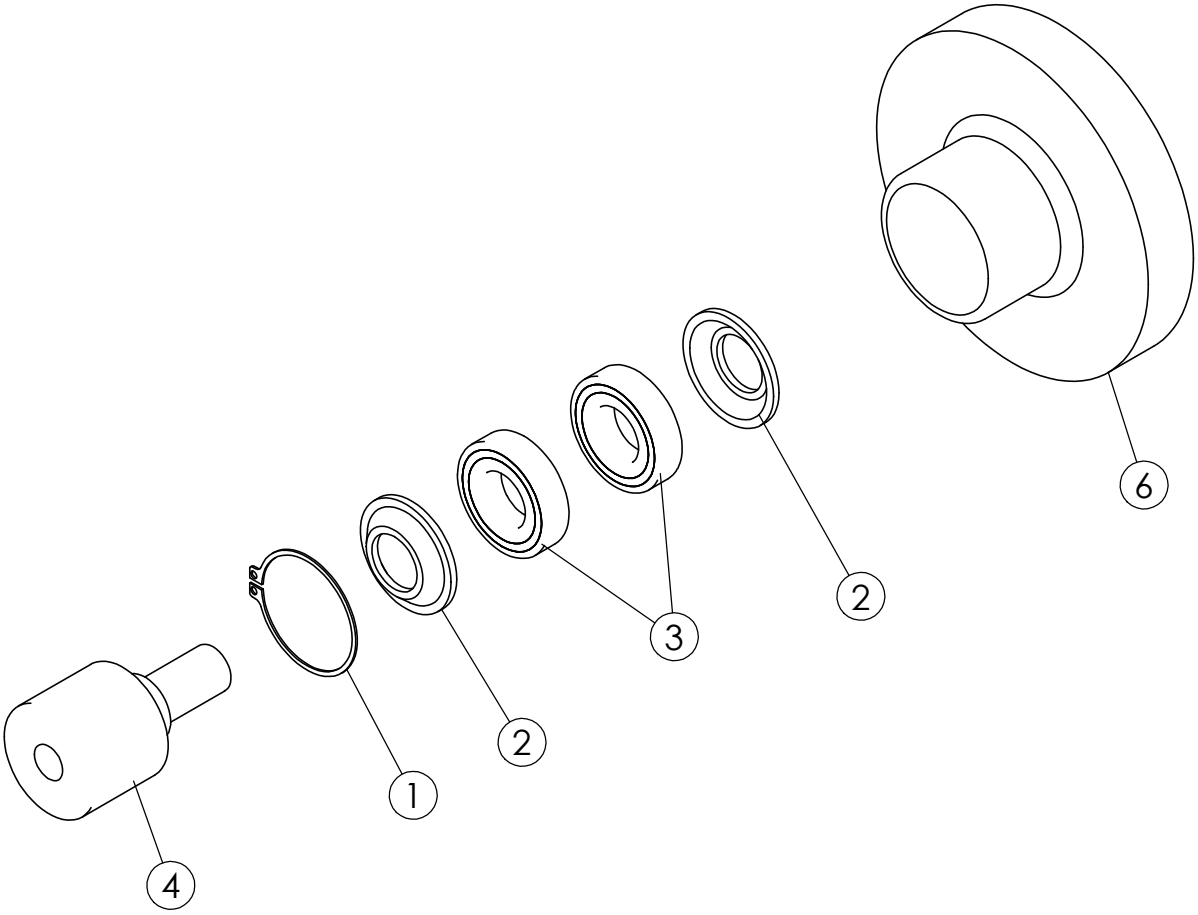
6
2
3
2
1
4

ROLLER - #54042			
ITEM	**PART NO.**	**DESCRIPTION**	**QTY**
1	54151	SNAP RING SR11	1
2	54152	WASHER	2
3	54108	BEARING 2"	2
4	56885	STUB SHAFT LONG	1
5	62702	STUB SHAFT SHORT	1
6	54042*	ROLLER-STEP 6"	1

* COMES WITH ITEMS 1-5

BELTED CHAIN
LAP JOINT CONNECTION

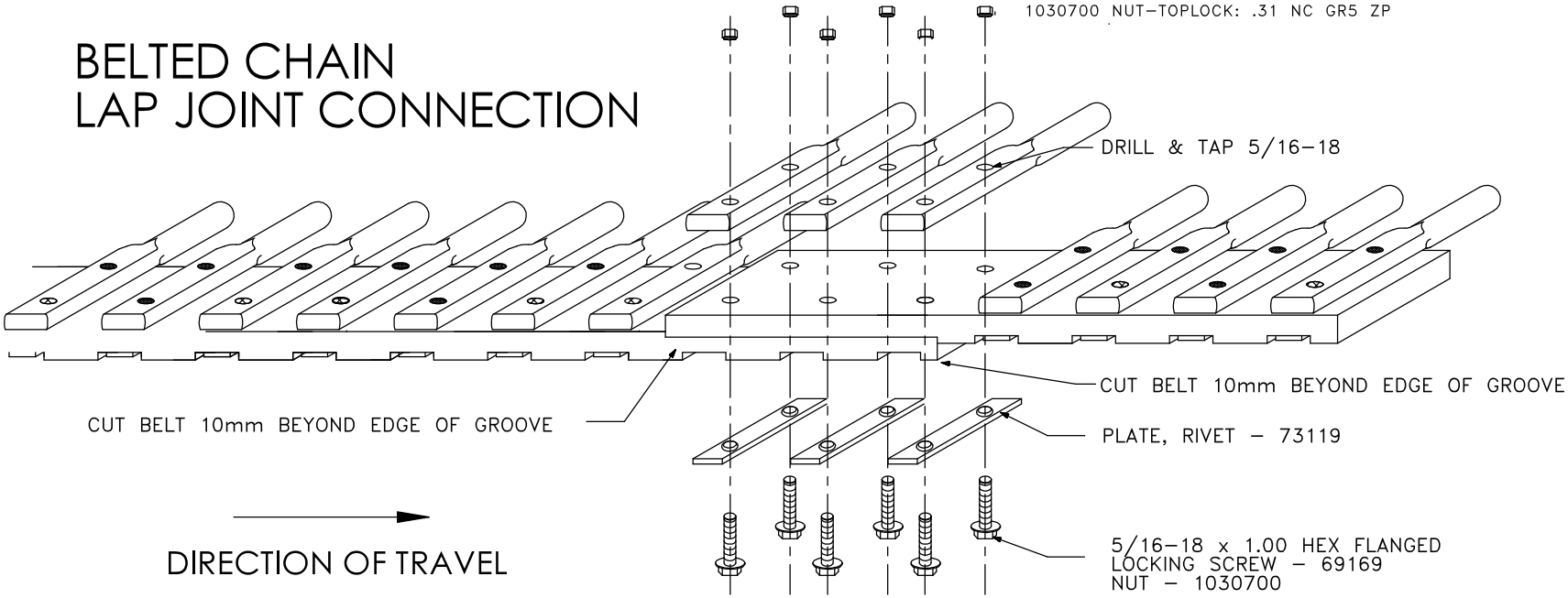

DIRECTION OF TRAVEL

WARNING : ENSURE THAT SCREWS ARE SUFFICIENTLY TIGHT TO PRODUCE A BULGE AT THE EDGE OF THE BELT OF BETWEEN 1 AND 2mm (SEE DIAGRAM).
FAILURE TO DO SO MAY CAUSE PREMATURE FAILURE AND VOID YOUR WARRANTY

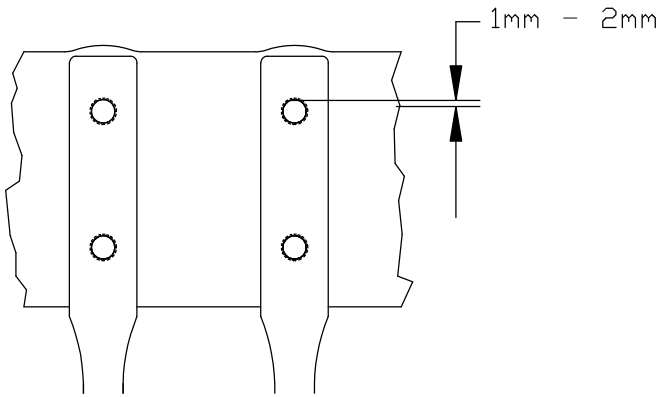

.50 Ø RODS DRILL & TAP .313-18

STANDARD CHAIN

73122 STRAIGHT - ELEVATOR CHAIN
73123 UP - ELEVATOR CHAIN
69336 FLAT - ELEVATOR CHAIN

73163 STRAIGHT - JUMP CHAIN
73313 DOWN - JUMP CHAIN

DOUBLE CHAIN (ELEVATOR CHAIN)

301528 - STRAIGHT
301527 - UP
301526 - FLAT

3 BELT SCRUB CHAIN - LAP JOINT

CENTER LAP JOINT

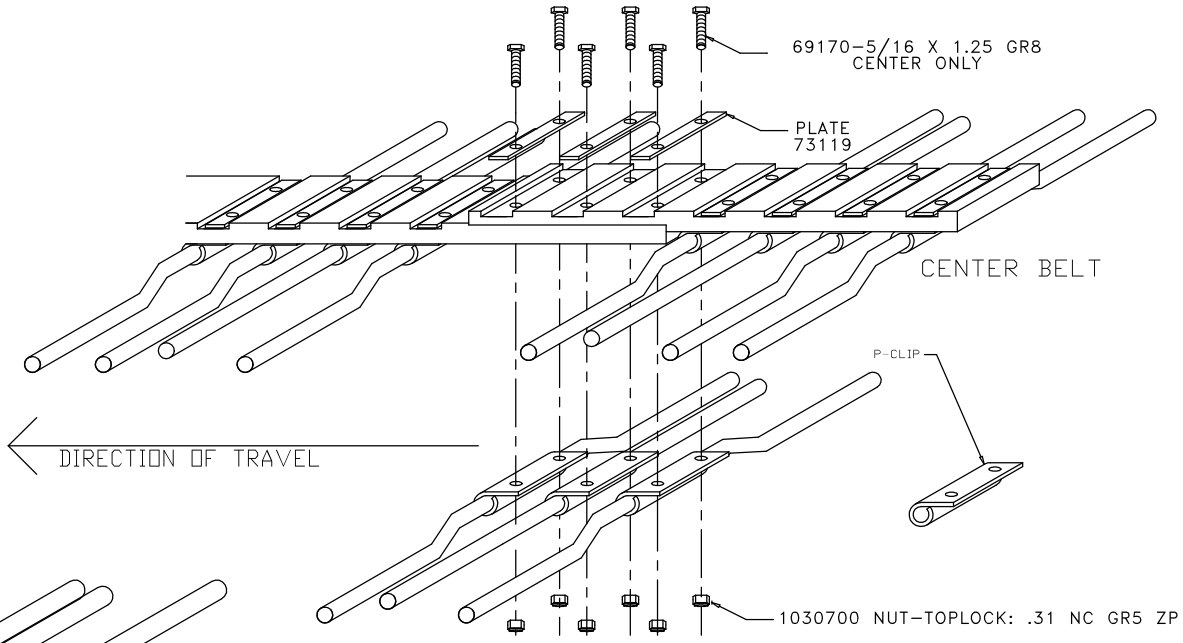

SIDE LAP JOINT

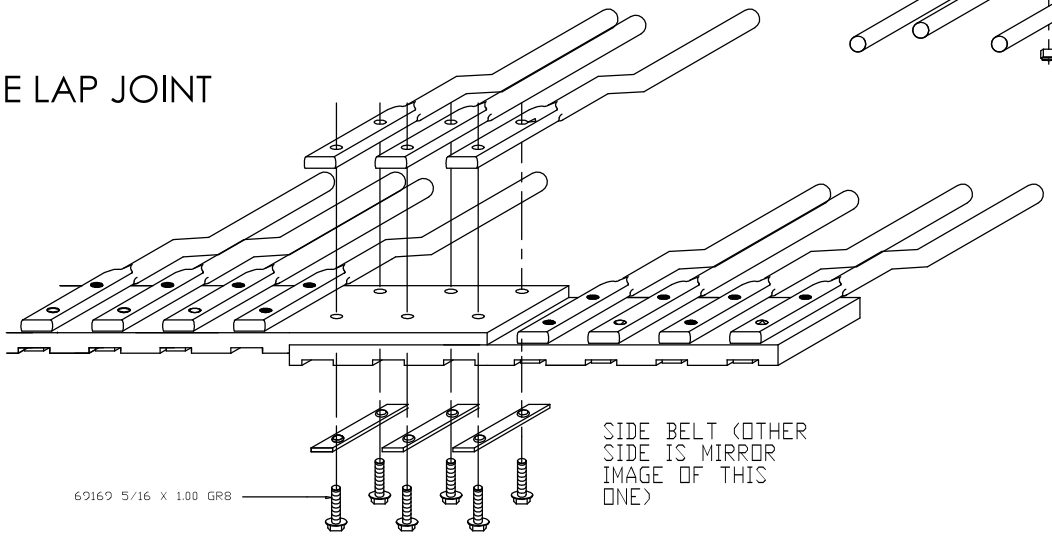

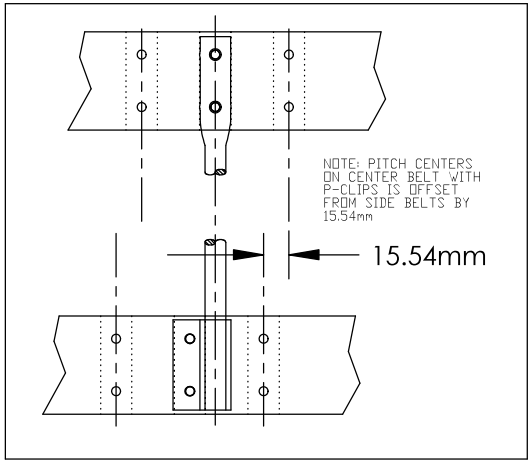

73117 - ROD-BC 1/2 X 64 STRAIGHT 3BELT
73118 - ROD-BC 1/2 X 64 DOWN 3BELT

BELTED CHAIN RIVET CUTTER #62802

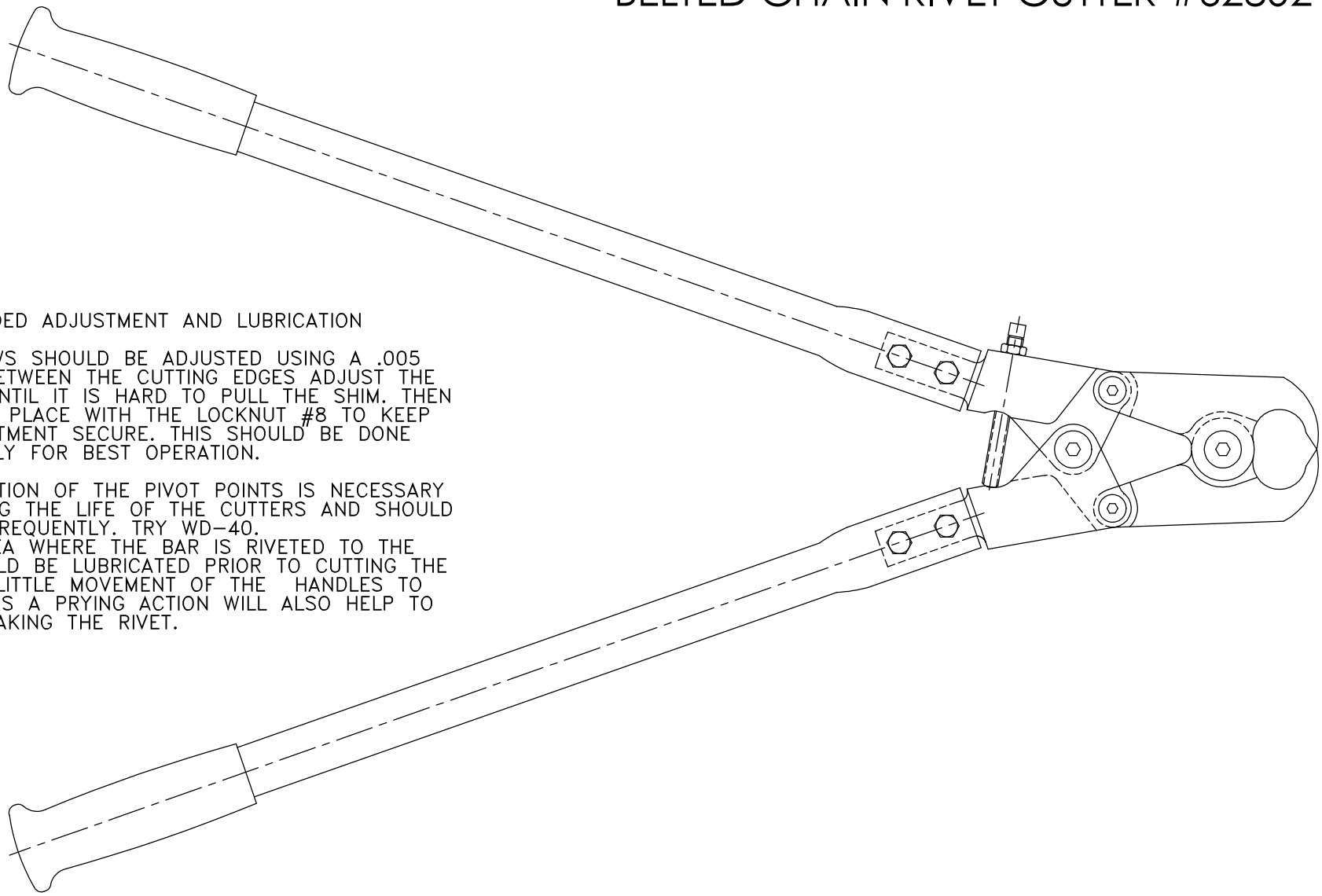

RECOMMENDED ADJUSTMENT AND LUBRICATION

1. THE JAWS SHOULD BE ADJUSTED USING A .005 IN. SHIM BETWEEN THE CUTTING EDGES ADJUST THE BOLT #7 UNTIL IT IS HARD TO PULL THE SHIM. THEN LOCK IT IN PLACE WITH THE LOCKNUT #8 TO KEEP THE ADJUSTMENT SECURE. THIS SHOULD BE DONE PERIODICALLY FOR BEST OPERATION.

2. LUBRICATION OF THE PIVOT POINTS IS NECESSARY TO PROLONG THE LIFE OF THE CUTTERS AND SHOULD BE DONE FREQUENTLY. TRY WD-40.
3. THE AREA WHERE THE BAR IS RIVETED TO THE BELT SHOULD BE LUBRICATED PRIOR TO CUTTING THE RIVETS, A LITTLE MOVEMENT OF THE HANDLES TO THE SIDE AS A PRYING ACTION WILL ALSO HELP TO FINISH BREAKING THE RIVET.

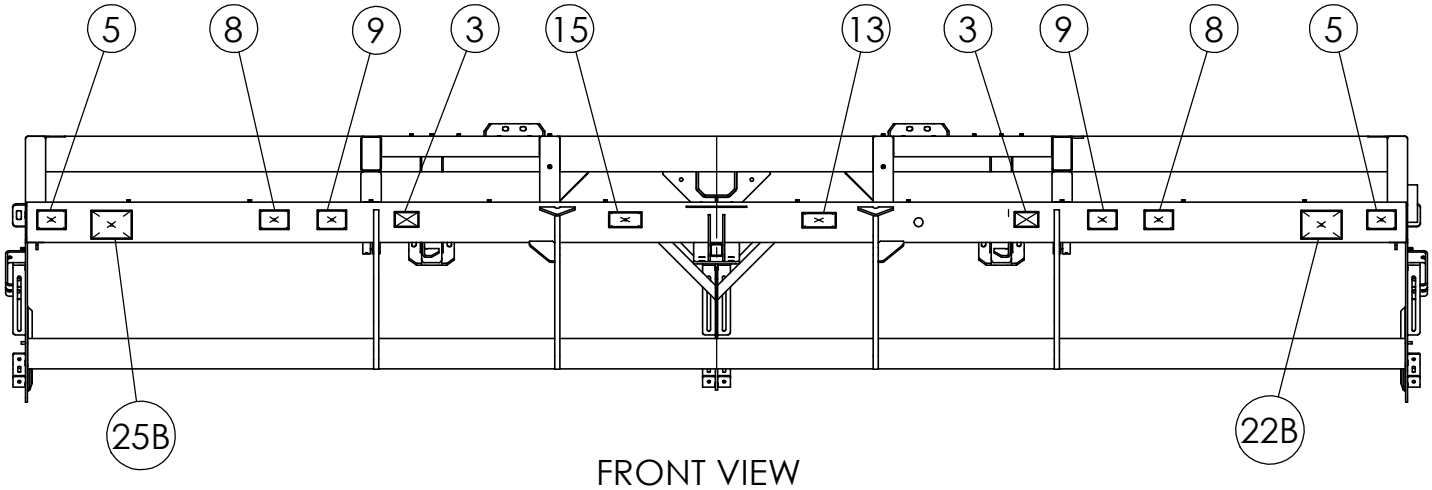

FRONT VIEW

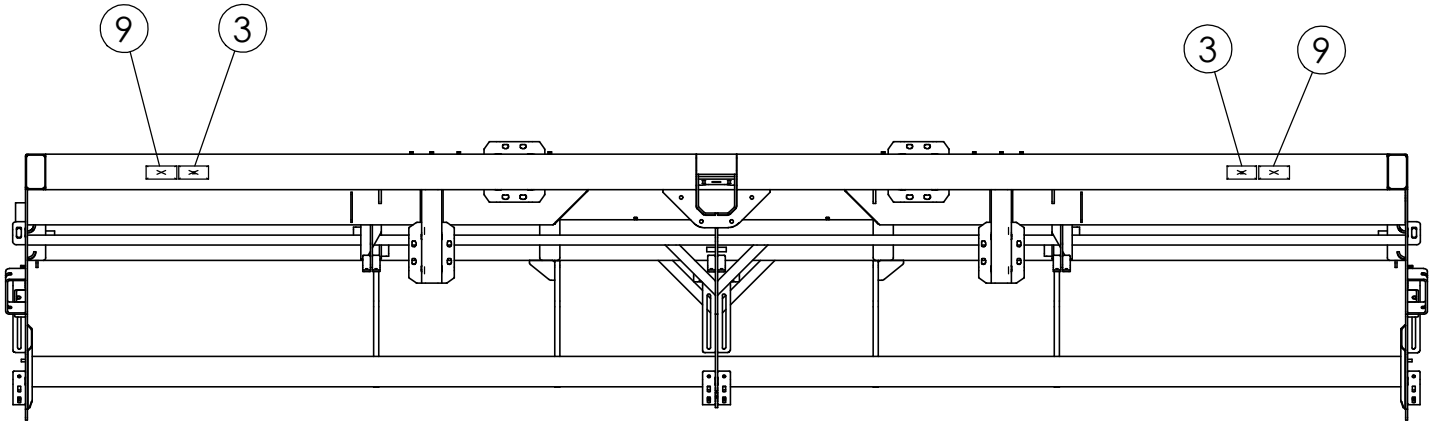

REAR VIEW

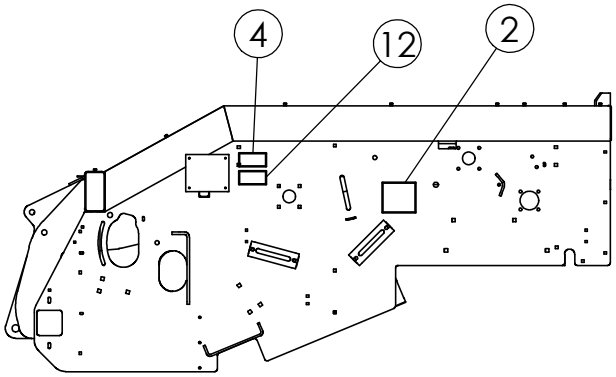

LEFT SIDE
UNDER DOOR

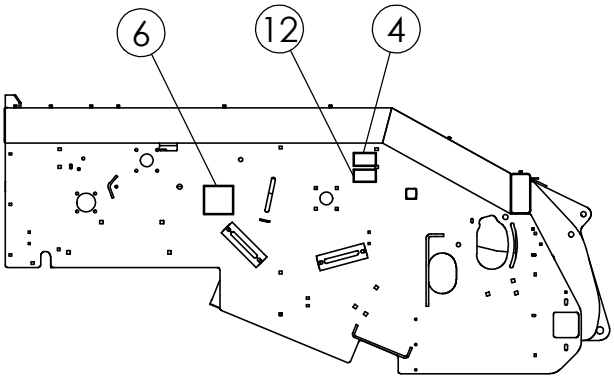

RIGHT SIDE
UNDER DOOR

DECALS

1 303273 QTY 1

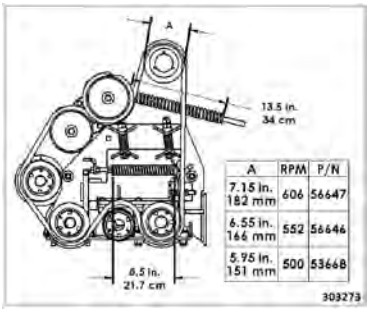

A	RPM	P/N
7.15 in. 182 mm	606	56647
6.55 in. 166 mm	552	56646
5.95 in. 151 mm	500	53668

2 303272 QTY 2

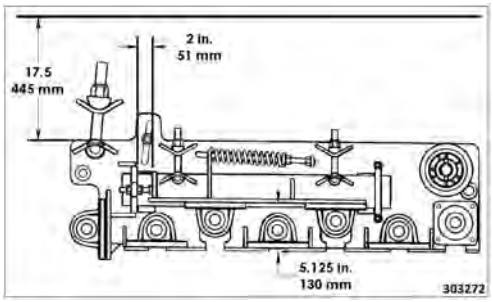

3 303263 QTY 4

4 9971013 QTY 5

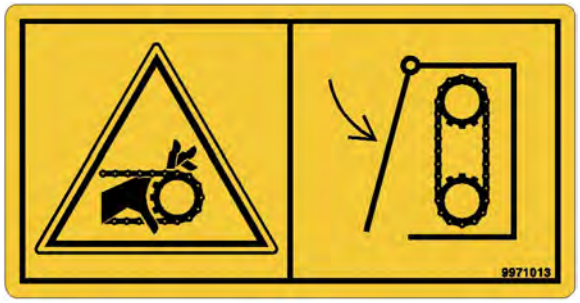

5 303265 QTY 2

6 303274 QTY 1

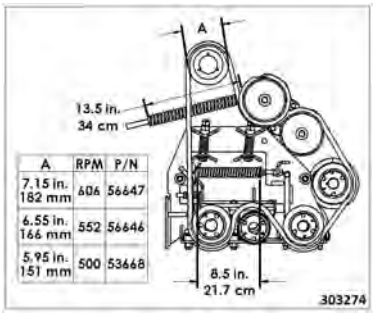

A	RPM	P/N
7.15 in. 182 mm	606	56647
6.55 in. 166 mm	552	56646
5.95 in. 151 mm	500	53668

7 303275 QTY 1

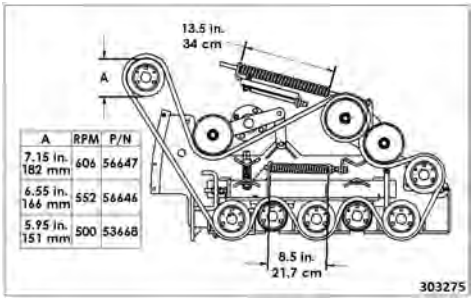

A	RPM	P/N
7.15 in. 182 mm	606	56647
6.55 in. 166 mm	552	56646
5.95 in. 151 mm	500	53668

8 9971015 QTY 2

9 303268 QTY 5

10 303264 QTY 1

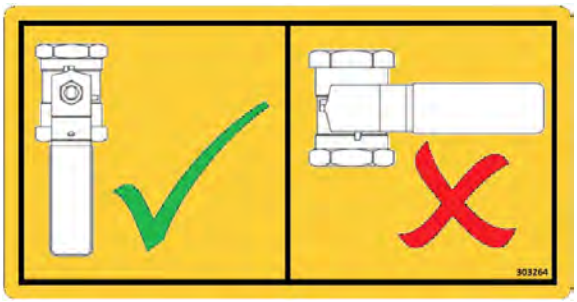

CONTINUED

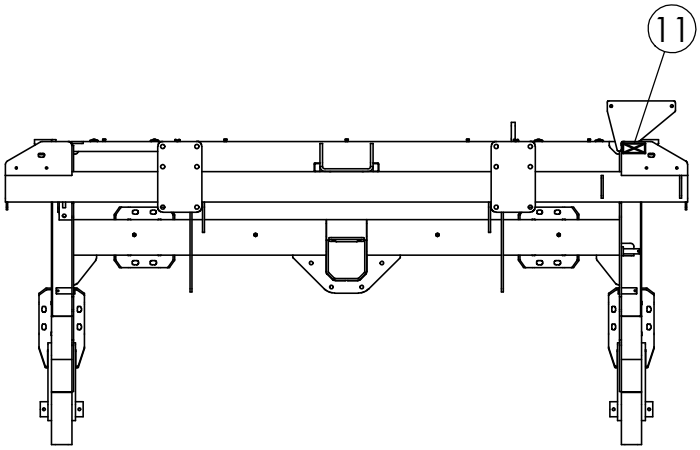
11

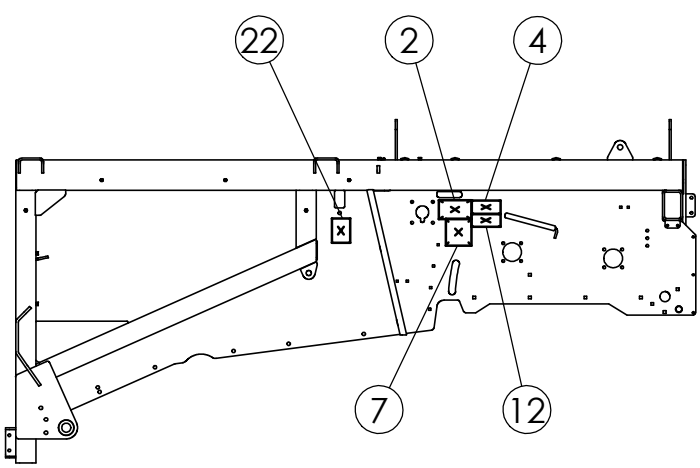
22
2
4
7
12

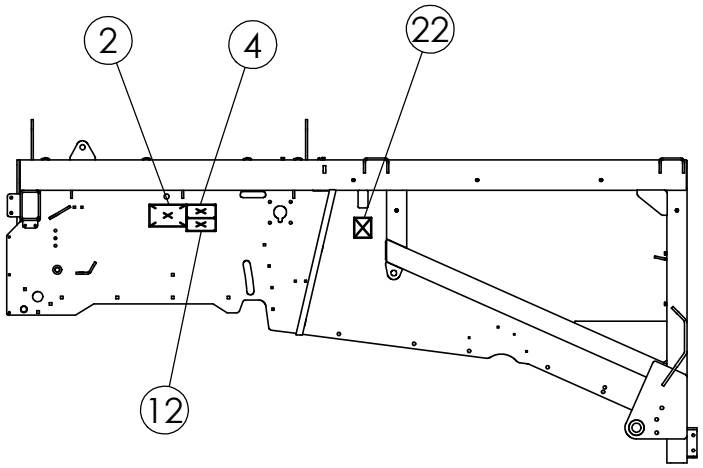
2
4
22
12

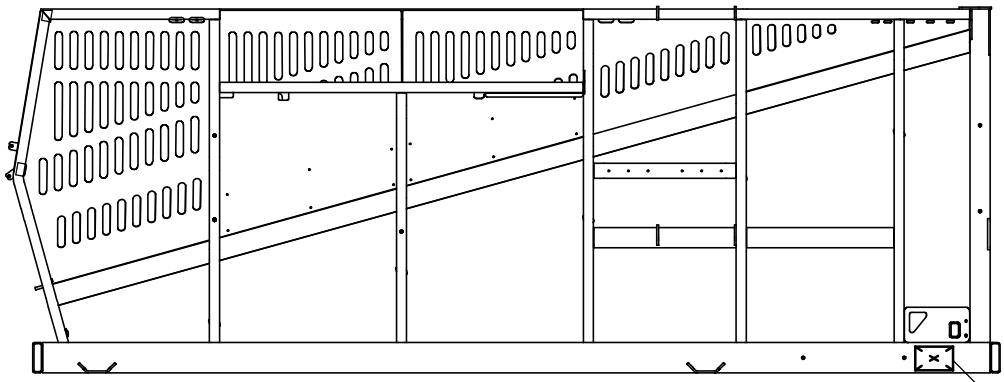
23

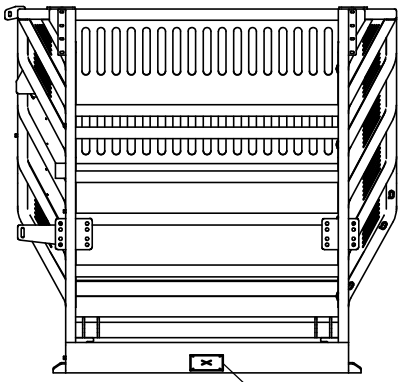
20

DECALS (CONTINUED)

11 303277 QTY 1

12 9971011 QTY 4

13 997861 QTY 1

14 303265 QTY 2

15 997859 QTY 1

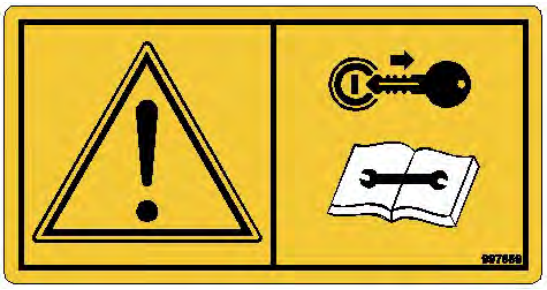

16 997867 QTY 2

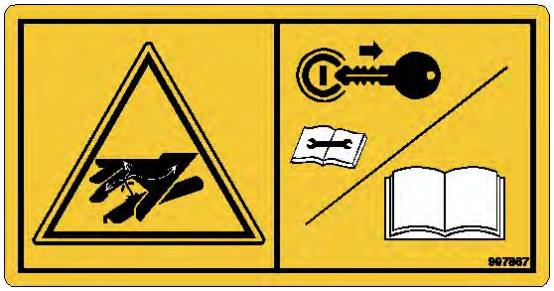

17 303264 QTY 1

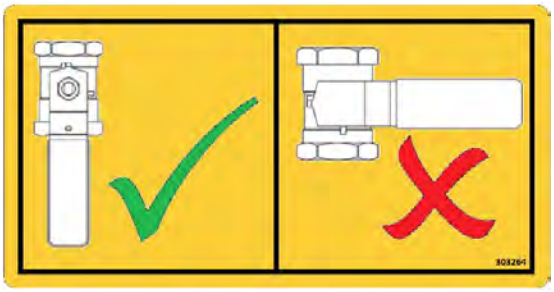

18 303269 QTY 1

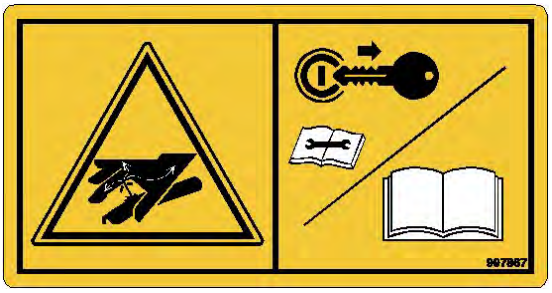

22 303270 QTY 2

303507

303271

CONTINUED

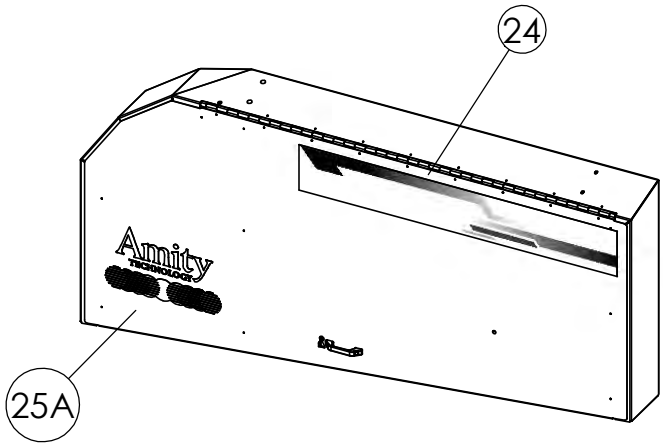

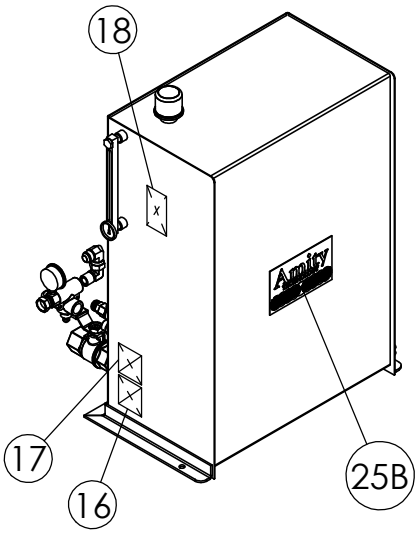

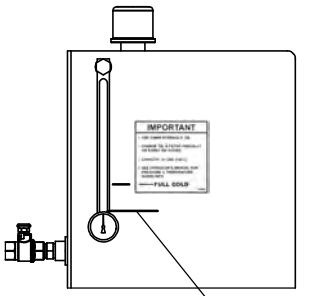

2" FROM LOW LINE TO FULL COLD LINE

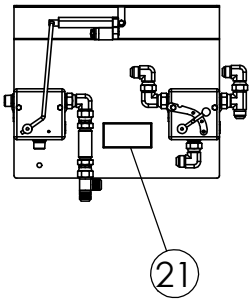

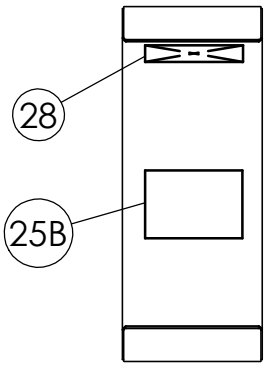

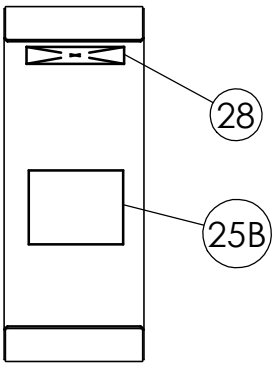

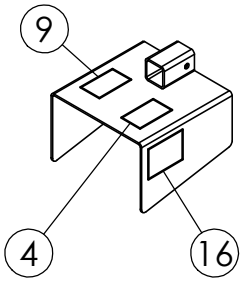

DECALS (CONTINUED)

20 9971025 QTY 1

21 303266 QTY 1

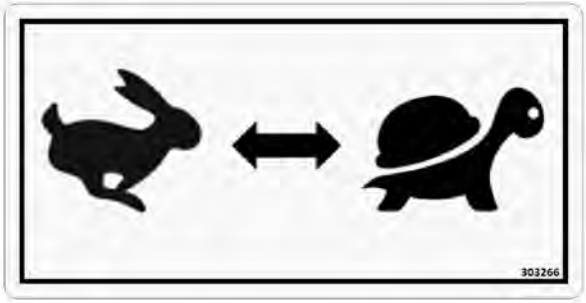

23 302992 QTY 1

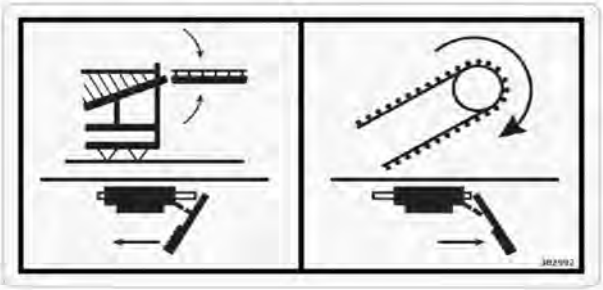

24 303503 LH QTY 1
303504 RH NOT SHOWN QTY 1

25A 303505 QTY 2 LOGO LARGE
25B 63465 QTY 5 LOGO SMALL

26 65330 QTY 2

27 65331 QTY 4

28 65332 QTY 2

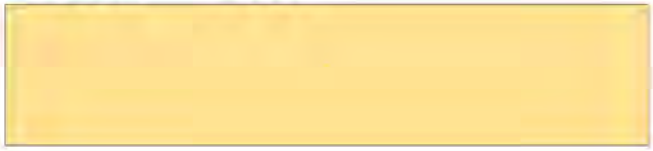

This page is intentionally left blank.

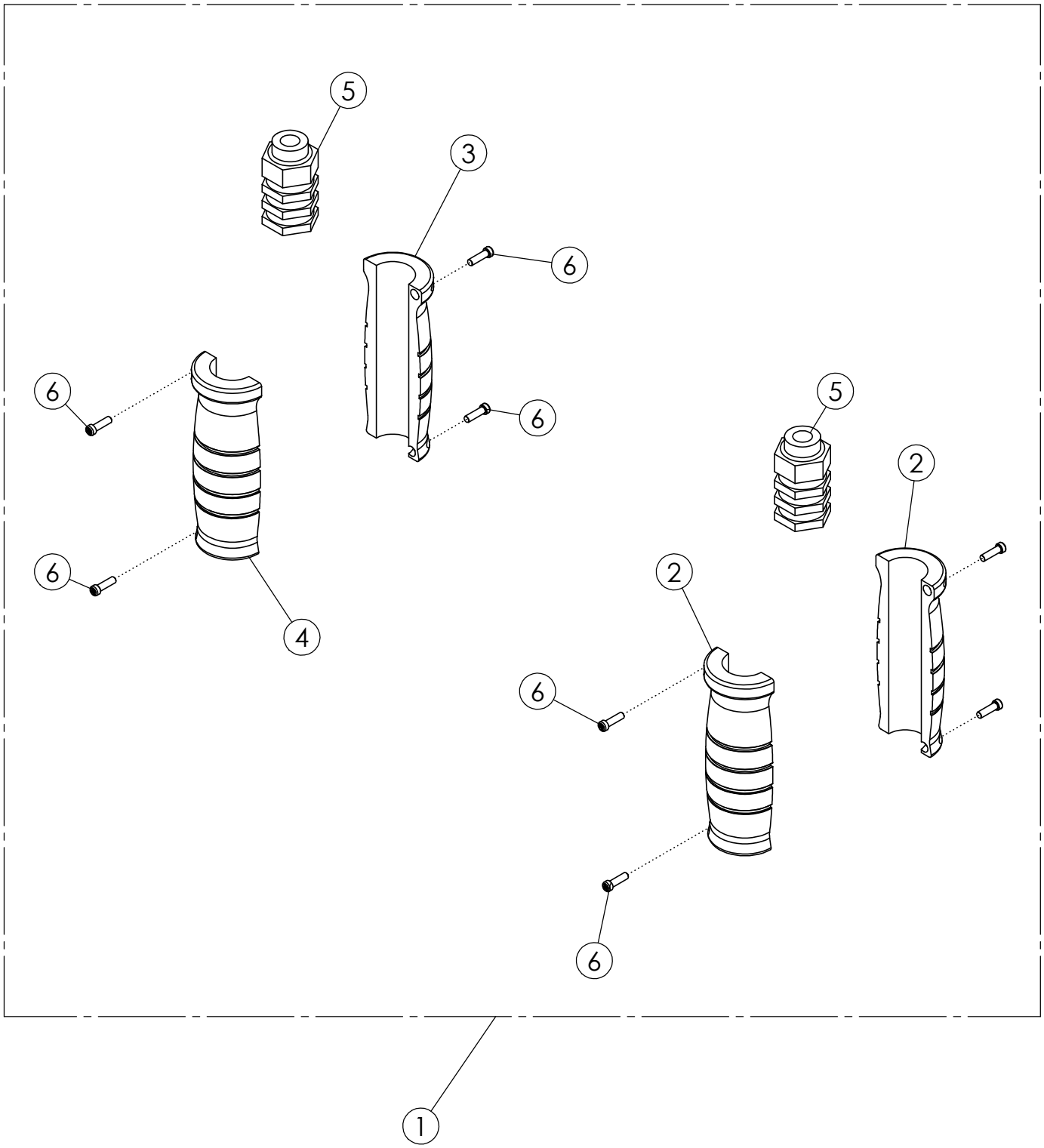
5
3
6
6
6
6
5
2
6
2
4
6
6
1

HYDRAULIC LABEL ASSY			
ITEM	**PART NO.**	**DESCRIPTION**	**QTY**
1	301920*	HYD LABEL: .50 ORANGE/GRAY SET	1
	301902*	HYD LABEL: .50 BLUE/GRAY SET	
	301917*	HYD LABEL: .50 YELLOW/GRAY SET	
	301914*	HYD LABEL: .50 GREEN/GRAY SET	
	301911*	HYD LABEL: .50 BLACK/GRAY SET	
	301908*	HYD LABEL: .50 RED/GRAY SET	
	302230*	HYD LABEL: .50 RED/GREEN SET	
	302226*	HYD LABEL: .50 BLACK/ORANGE SET	
	302227*	HYD LABEL: .50 BLUE/YELLOW SET	
	301923*	HYD LABEL: .75 GREEN/GRAY SET	
	301928*	HYD LABEL: .75 YELLOW/GRAY SET	
2		HYD LABEL: .50 HALF EXTEND	2
		HYD LABEL: .75 HALF EXTEND	
3		HYD LABEL: .50 HALF RETRACT	1
		HYD LABEL: .75 HALF RETRACT	
4		HYD LABEL: .50 GRAY HALF RETRACT	1
		HYD LABEL: .75 GRAY HALF RETRACT	
5		HYD LABEL: .50 CORE M & F O-RING	2
		HYD LABEL: .75 CORE M & F O-RING	
6		HYD LABEL: SET SCREW	8

* COMES WITH ITEMS 2 THRU 6