PARTS MANUAL

2022

Crop Chaser 1000

2800 7th Avenue North
Fargo, ND 58108

Phone: (701) 232-4199
Fax: (701) 234-1716
www.amitytech.com

MANUAL PART NO: 319220

RELEASE DATE: 09/2022
DESIGNED AND MANUFACTURED IN USA

TABLE OF CONTENTS

AXLE	1-2
HITCH	3-4
LADDER FRAME	5-6
TRIANGLE FRAME FRONT	7-8
TRIANGLE FRAME REAR	9-10
TRIANGLE AND LADDER SUB	11-12
TRUSS FRAME	13-14
ARCH	15-16
UNLOAD WALL	17-18
TANK	19-22
WEIGHT KIT	23-24
LIGHT KIT	25-26
HYDRAULIC JACK	27-28
FLOOR CHAIN MOTORS	29-30
FILL WALL RUBBER	31-32
TANK ACCESS DOOR	33-34
TANK TOP EXTENTION FRONT	35-36
TANK TOP EXTENTION REAR	37-38
FILL EXTENTION SUPPORT	39-40
HOOK ON GRAIN CHUTE	41-42
UNLOAD CHAIN WIPER	43-44
TOP DOOR LOCK BAR	45-46
TANK LADDER	47-48
HAUNCH	49-50
REVERSE HITCH	51-52
TRUSS ARM SHORT	53-54
TRUSS ARM LONG	55-56
MUDFLAPS	57-58
SCALE SYSTEM (HITCH)	59-60
LADDER FRAME ROLLER	61-62
SAFETY PINS	63-64
HOSE TRAY	65-66
HYDRAULIC MOUNTING	67-68
LIFT CYLINDER HYDRAULICS	69-70
TILT CYLINDER HYDRAULICS	71-72
FRONT MOTOR HYDRAULICS	73-74
REAR MOTOR HYDRAULICS	75-76
TANK DOOR HYDRAULICS	77-78
JACK HYDRAULICS	79-80
DECALS	81-86

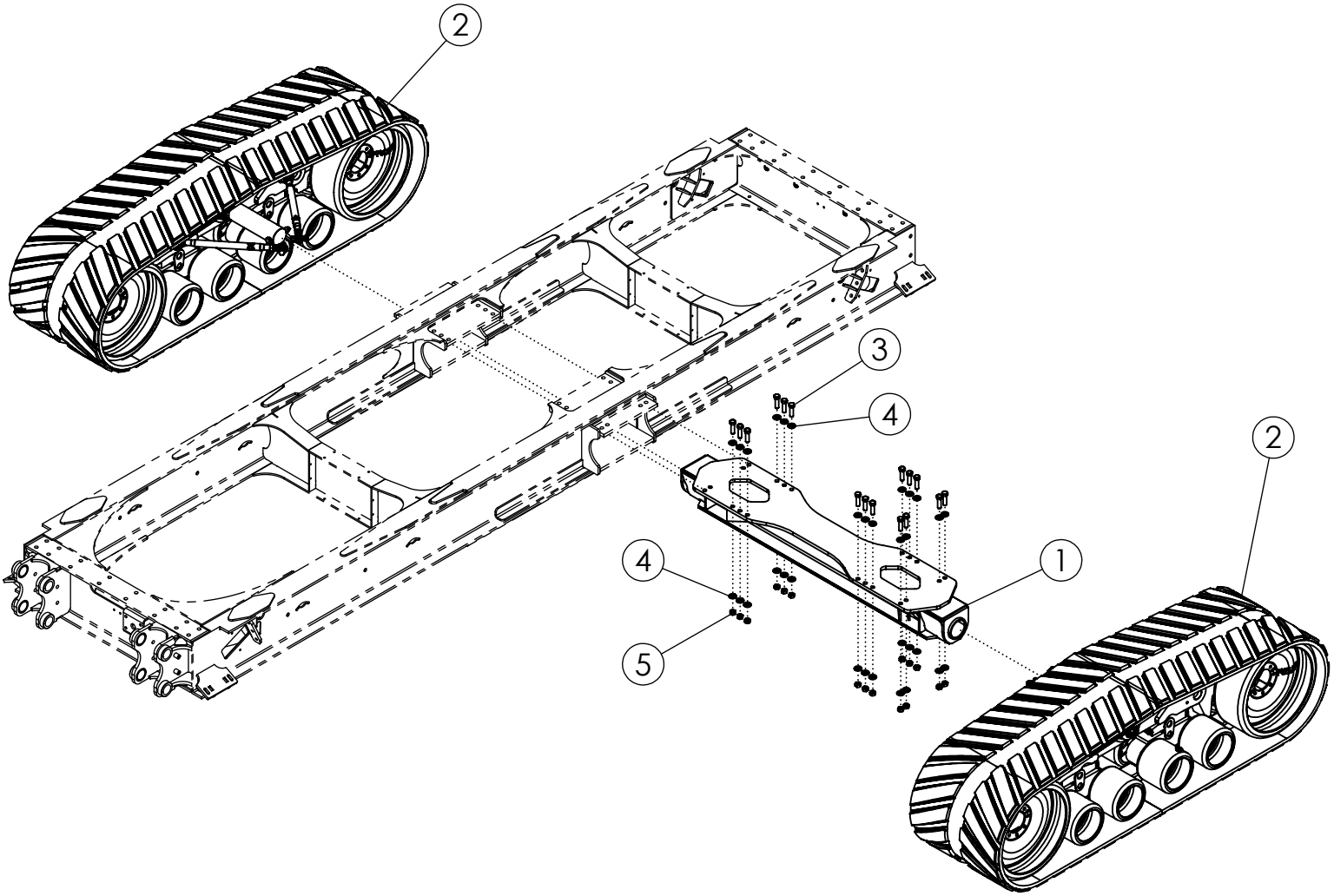
2
3
4
2
4
1
5

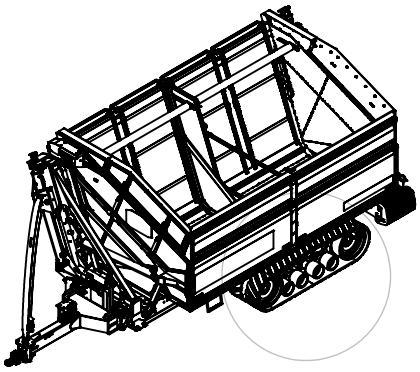

AXLE			
ITEM	PART NO.	DESCRIPTION	QTY
1	318129	AXLE-CC1000	1
2	310003	TRACKS-CAMOPLAST TTS-100-3613 PAIR	1
3	1032276	BOLT-HEX: 1.00 X 3.50 NC GR8 ZP	16
4	1030728	WASHER-FLAT: SAE 1.00 ZP GR8	32
5	1016969	NUT-TOPLOCK: 1.00 NC GR5 ZP	16

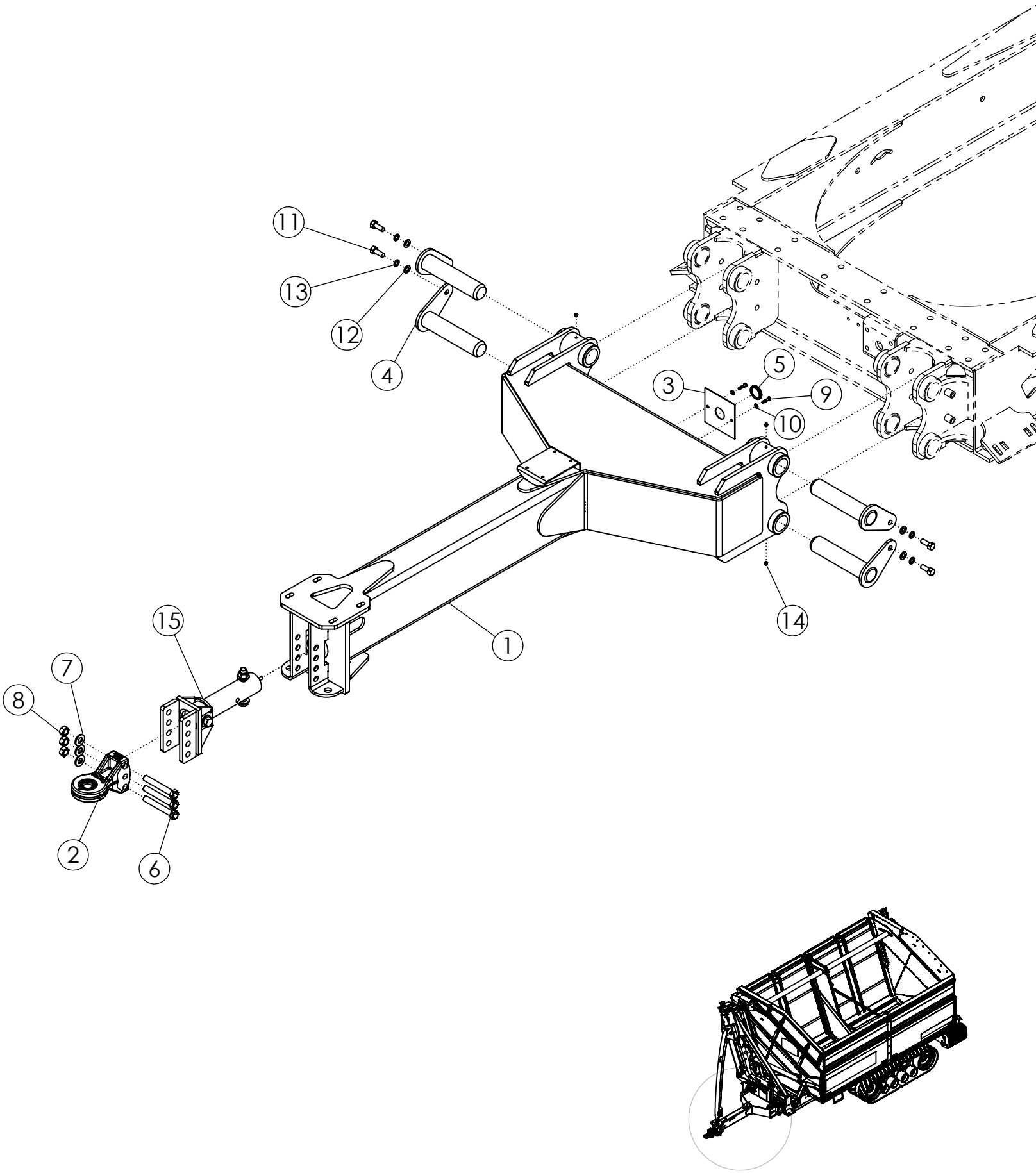
11
13
12
4
5
3
9
10
14
1
15
7
8
2
6

HITCH			
ITEM	PART NO.	DESCRIPTION	QTY
1	318192	WLDMT-CC1000 HITCH	1
2	311422	HITCH-BULL PULL CAT 3/4 (FORGED)	1
	311820	HITCH-BULL PULL CAT 5	
3	318898	PLATE-REAR HARNESS HOLE COVER	1
4	318276	WLDMT-HITCH FLAG PIN 3.00" X 13.00" ZP	4
5	319202	GROMMET-RUBBER VARIABLE ID	1
6	1018839	BOLT-HEX: 1.00 X 7.00 NC GR8 ZP	3
7	1030728	WASHER-FLAT: SAE 1.00 ZP GR8	3
8	1016969	NUT-TOPLOCK: 1.00 NC GR5 ZP	3
9	1011602	BOLT-HEX: .38 X 1.50 NC GR5 ZP	2
10	1014608	WASHER-FLAT: SAE .38 ZP	2
11	1012060	BOLT-HEX: .75 X 2.00 NC GR5 ZP	4
12	1012634	WASHER-FLAT: SAE .75 ZP	4
13	1012061	WASHER-LOCK: .75 ZP	4
14	1030766	ZERK-GREASE: .13 NPT STRAIGHT	4
15	318025	KT-SCALE CROP CHASER WIRELESS (DIGISTAR)	1

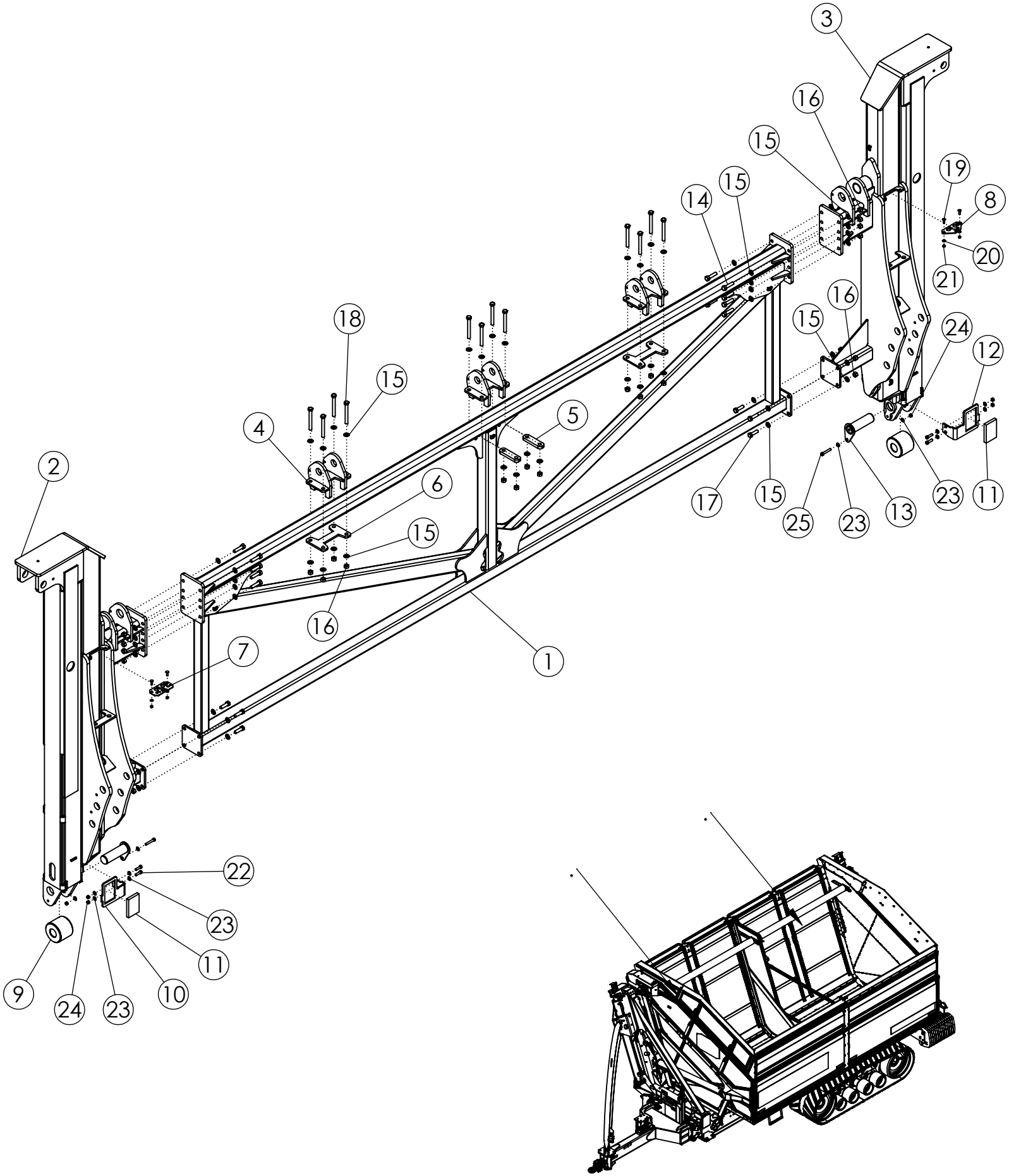
3
16
15
19
8
15
14
20
21
16
15
24
12
18
15
5
4
2
6
15
17
15
25
23
13
23
11
16
7
1
22
23
11
9
24
23
10

LADDER FRAME

ITEM	PART NO.	DESCRIPTION	QTY
1	318912	WLDMT-LADDER CROSS FRAME PC	1
2	318931	WLDMT-LADDER SUB FRONT	1
3	318934	WLDMT-LADDER SUB REAR	1
4	318911	WLDMT-HINGE MIDDLE EAR	3
5	318921	PLATE-HINGE BOLT MOUNT	2
6	318927	PLATE-HINGE BOLT MOUNT OUTSIDE	2
7	319328	PLATE-LADDER BULKHEAD FRONT	1
8	319329	PLATE-LADDER BULKHEAD REAR	1
9	319326	ASSY-LADDER FRAME ROLLER	2
10	318708	PLATE-PLASTIC MOUNT 2 FRONT	1
11	318714	PLASTIC-LADDER FRAME BLOCK	2
12	318709	PLATE-PLASTIC MOUNT 2 REAR	1
13	318079	WLDMT-ROLLER FLAG PIN 2.50" GKF	2
14	1032291	BOLT-HEX: .75 X 3.00 NC GR8 YZP	16
15	35132	WASHER-FLAT: SAE .75 YZP GR8	72
16	1017000	NUT-TOPLOCK: .75 NC GR5 ZP	36
17	62096	BOLT-HEX: .75 X 2.50 NC GR8 ZP	8
18	319218	BOLT-HEX: .75 X 6.50 NC GR8 YZP	12
19	1016362	BOLT-CRG: .38 X 1.25 NC GR5 ZP	4
20	1014608	WASHER-FLAT: SAE .38 ZP	4
21	1016999	NUT-TOPLOCK: .38 NC GR5 ZP	4
22	1011608	BOLT-HEX: .50 X 1.75 NC GR5 ZP	4
23	1011584	WASHER-FLAT: SAE .50 ZP	12
24	1027461	NUT-TOPLOCK: .50 NC GR5 ZP	6
25	1011611	BOLT-HEX: .50 X 3.00 NC GR5 ZP	2

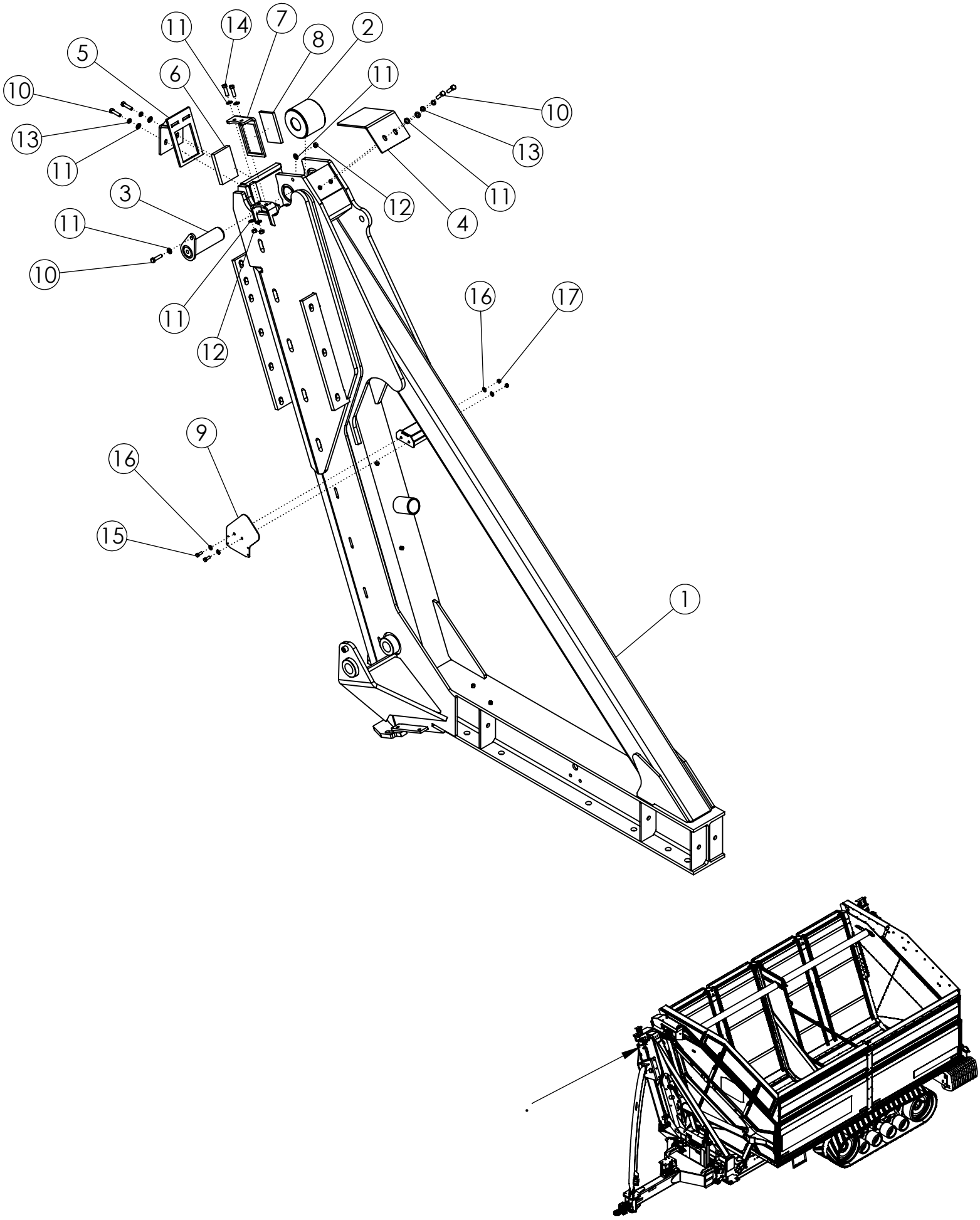
11
14
7
8
2
5
6
11
10
10
13
13
11
11
3
12
4
11
10
11
12
16
17
9
16
15
1

TRIANGLE FRAME FRONT			
ITEM	PART NO.	DESCRIPTION	QTY
1	318311	WLDMT-TRIANGLE FRAME FRONT	1
2	319326	ASSY-LADDER FRAME ROLLER	1
3	318079	WLDMT-ROLLER FLAG PIN 2.50" GKF	1
4	318681	PLATE-ROLLER SHIELD	1
5	319011	WLDMT-TRIANGLE PLASTIC BLOCK MOUNT	1
6	318714	PLASTIC-LADDER FRAME BLOCK	1
7	318730	PLATE-INNER TRIANGLE PLASTIC MOUNT	1
8	318731	PLASTIC-INNER TRIANGLE FRAME BLOCK	1
9	319295	PLATE-HOSE LOOP CAP WITH LIBRA MOUNT	1
10	1011609	BOLT-HEX: .50 X 2.00 NC GR5 ZP	5
11	1011584	WASHER-FLAT: SAE .50 ZP	10
12	1027461	NUT-TOPLOCK: .50 NC GR5 ZP	3
13	1011581	WASHER-LOCK: SAE .50 ZP	4
14	1011608	BOLT-HEX: .50 X 1.75 NC GR5 ZP	2
15	1011600	BOLT-HEX: .38 X 1.00 NC GR5 ZP	2
16	1014608	WASHER-FLAT: SAE .38 ZP	4
17	1016999	NUT-TOPLOCK: .38 NC GR5 ZP	2

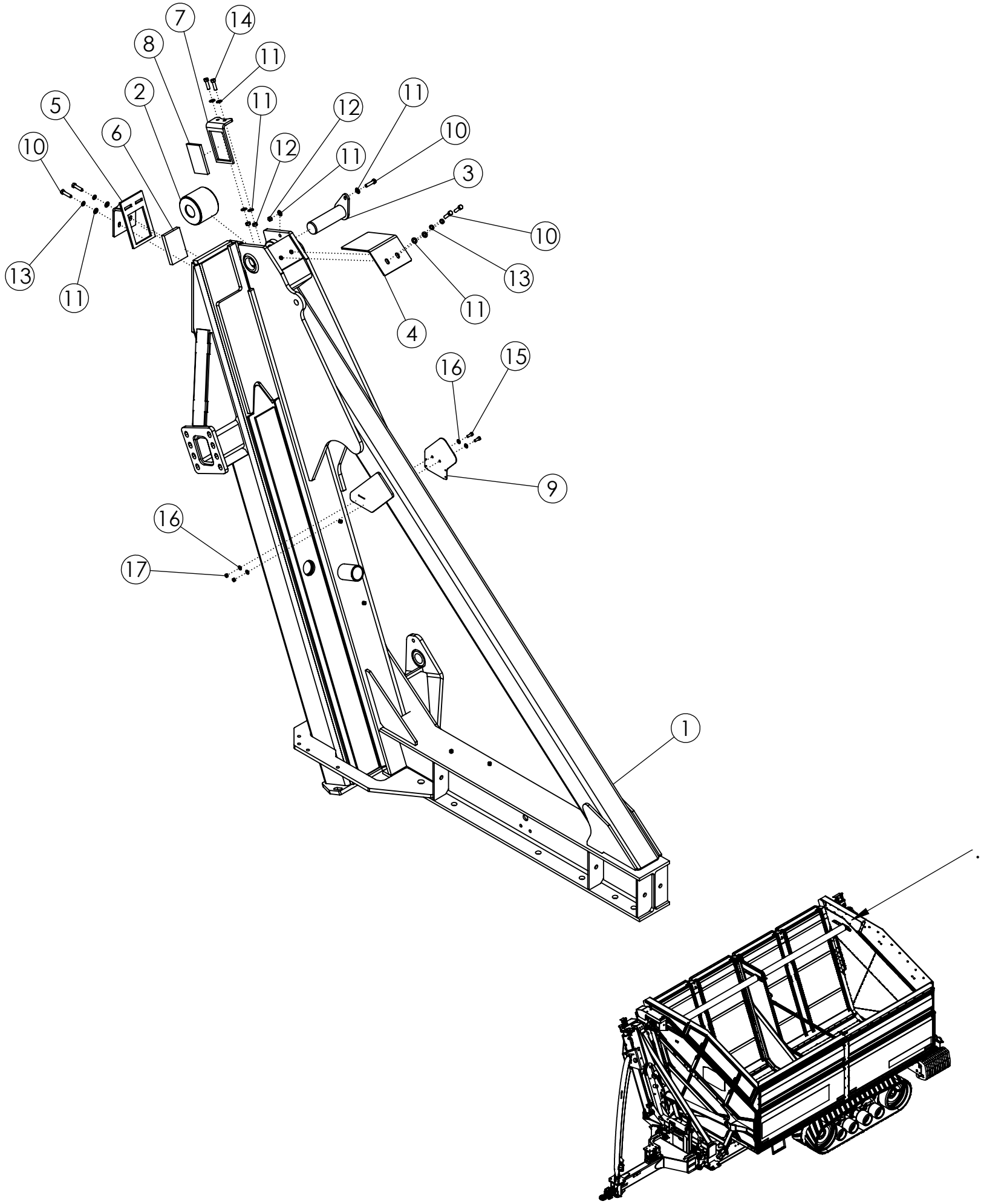
7
14
8
11
2
11
12
11
5
6
12
10
10
11
3
10
13
13
11
11
4
16
15
9
16
17
1

TRIANGLE FRAME REAR			
ITEM	PART NO.	DESCRIPTION	QTY
1	318312	WLDMT-TRIANGLE FRAME REAR	1
2	319326	ASSY-LADDER FRAME ROLLER	1
3	318079	WLDMT-ROLLER FLAG PIN 2.50" GKF	1
4	318681	PLATE-ROLLER SHIELD	1
5	319011	WLDMT-TRIANGLE PLASTIC BLOCK MOUNT	1
6	318714	PLASTIC-LADDER FRAME BLOCK	1
7	318730	PLATE-INNER TRIANGLE PLASTIC MOUNT	1
8	318731	PLASTIC-INNER TRIANGLE FRAME BLOCK	1
9	319295	PLATE-HOSE LOOP CAP WITH LIBRA MOUNT	1
10	1011609	BOLT-HEX: .50 X 2.00 NC GR5 ZP	5
11	1011584	WASHER-FLAT: SAE .50 ZP	10
12	1027461	NUT-TOPLOCK: .50 NC GR5 ZP	3
13	1011581	WASHER-LOCK: SAE .50 ZP	4
14	1011608	BOLT-HEX: .50 X 1.75 NC GR5 ZP	2
15	1011600	BOLT-HEX: .38 X 1.00 NC GR5 ZP	2
16	1014608	WASHER-FLAT: SAE .38 ZP	4
17	1016999	NUT-TOPLOCK: .38 NC GR5 ZP	2

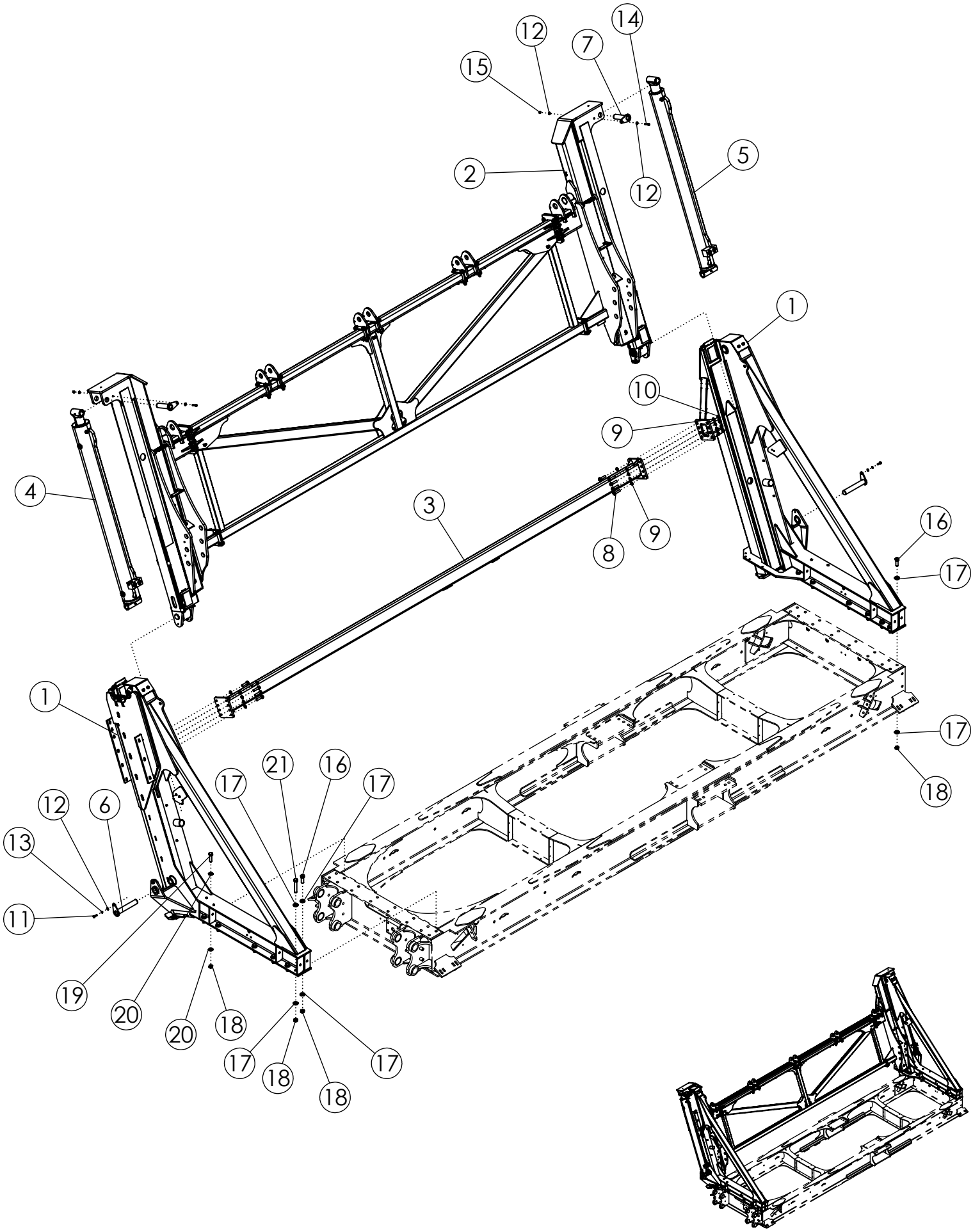
14
12
7
15
5
2
12
1
10
9
4
3
9
8
16
17
1
17
21
16
17
18
12
6
13
11
19
20
20
18
17
18
18
17

TRIANGLE AND LADDER SUB

ITEM	PART NO.	DESCRIPTION	QTY
1	318379	ASSY-TRIANGLE FRAMES	1
2	318935	ASSY-LADDER FRAME	1
3	318970	WLDMT-UPPER TRUSS	1
4	318001	CYL-HYDRAULIC 7.00 X 72 REPHASE	1
5	318002	CYL-HYDRAULIC 5.75 X 72 REPHASE	1
6	318156	WLDMT-CYLINDER FLAG PIN 2.00" X 12.00" ZP	2
7	318160	WLDMT-CYLINDER FLAG PIN 2.00" X 8.00" ZP	2
8	1032291	BOLT-HEX: .75 X 3.00 NC GR8 YZP	16
9	35132	WASHER-FLAT: SAE .75 YZP GR8	32
10	1017000	NUT-TOPLOCK: .75 NC GR5 ZP	16
11	1011607	BOLT-HEX: .50 X 1.50 NC GR5 ZP	2
12	1011584	WASHER-FLAT: SAE .50 ZP	6
13	1011581	WASHER-LOCK: .50 ZP	2
14	1017708	BOLT-HEX: .50 X 2.25 NC GR5 ZP	2
15	1027461	NUT-TOPLOCK: .50 NC GR5 ZP	2
16	1018008	BOLT-HEX: 1.00 X 3.00 NC GR8 ZP	20
17	1030728	WASHER-FLAT: SAE 1.00 ZP GR8	42
18	1016969	NUT-TOPLOCK: 1.00 NC GR5 ZP	23
19	1011626	BOLT-HEX: 1.00 X 3.50 NC GR5 ZP	2
20	1016663	WASHER-FLAT: SAE 1.00 ZP	4
21	1032502	BOLT-HEX: 1.00 X 6.00 NC GR8 ZP	1

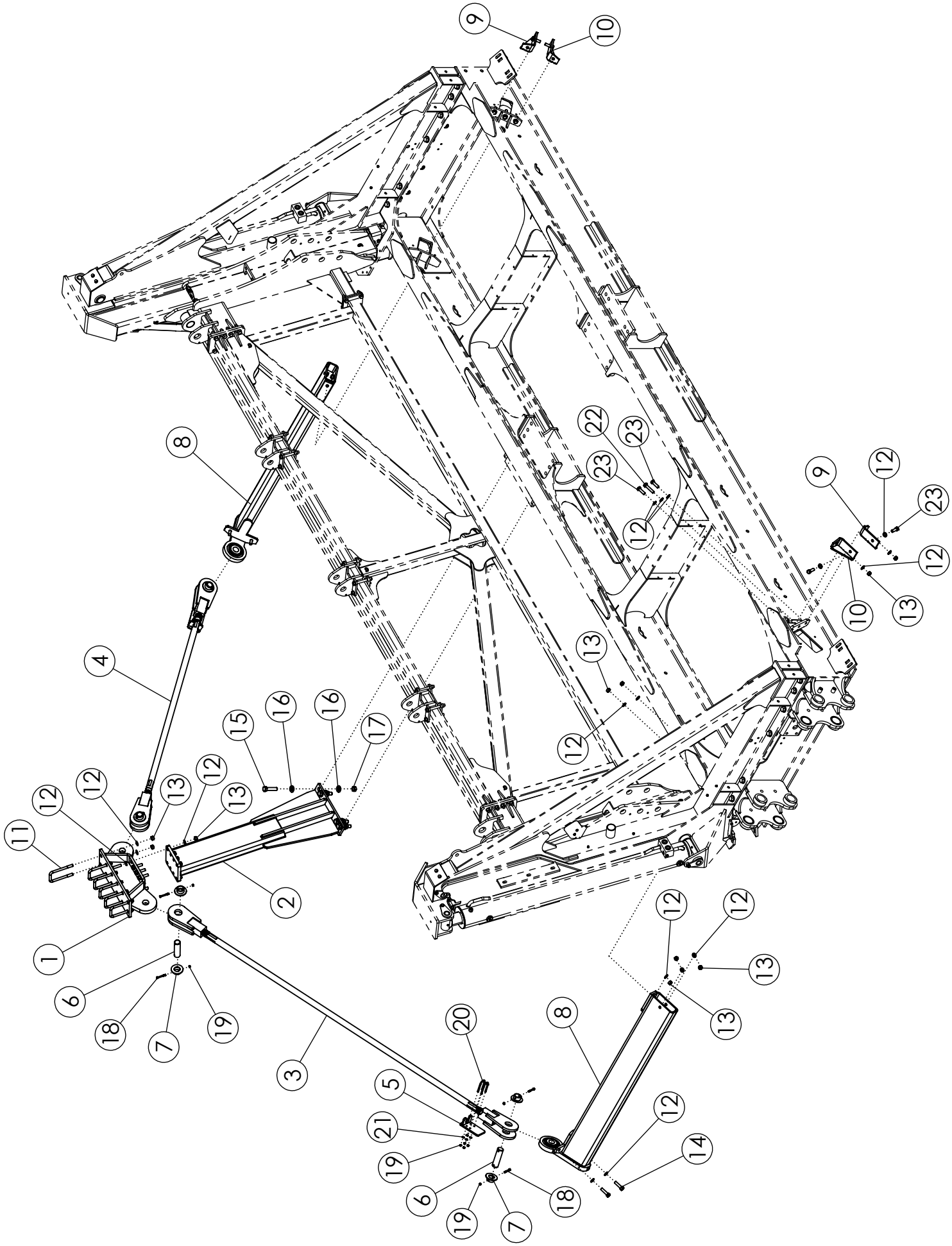

1
2
3
4
5
6
7
8
9
10
11
12
13
14
15
16
17
18
19
20
21
22
23

TRUSS FRAME			
ITEM	PART NO.	DESCRIPTION	QTY
1	318979	WLDMT-MIDDLE TRUSS CONNECTION	1
2	318944	WLDMT-TRUSS CENTER SUPPORT	1
3	318923	ASSY-TRUSS ARM LONG	1
4	318952	ASSY-TRUSS ARM SHORT	1
5	319185	WLDMT-SHAFT MOUNT	2
6	319195	PIN-TRUSS 2.000" X 7.125" ZP	4
7	319197	WLDMT-TRUSS PIN COLLAR	8
8	318951	ASSY-MODULE END CONNECTION	2
9	319062	WLDMT-MODULE GUSSET LH	2
10	319063	WLDMT-MODULE GUSSET RH	2
11	319026	U-BOLT: .750 X 8.00 X 4.06 X 8.00	6
12	35132	WASHER-FLAT: SAE .75 YZP GR8	56
13	1017000	NUT-TOPLOCK: .75 NC GR5 ZP	34
14	1032291	BOLT-HEX: .75 X 3.00 NC GR8 YZP	12
15	1032288	BOLT-HEX: 1.0 X 4.50 NC GR8 ZP	4
16	1030728	WASHER-SPINDLE: 1.06ID X 2.13OD	8
17	1016969	NUT-TOPLOCK: 1.00 NC GR5 ZP	4
18	1013239	BOLT-HEX: .38 X 3.00 NC GR5 ZP	8
19	1016999	NUT-TOPLOCK: .38 NC GR5 ZP	16
20	319193	U-BOLT: .375 X 4.00 X 2.00 X 4.00 ZP	4
21	1014608	WASHER-FLAT: SAE .38 ZP	8
22	1032289	BOLT-HEX: .75 X 3.50 NC GR8 YZP	2
23	62096	BOLT-HEX: .75 X 2.50 NC GR8 ZP	8

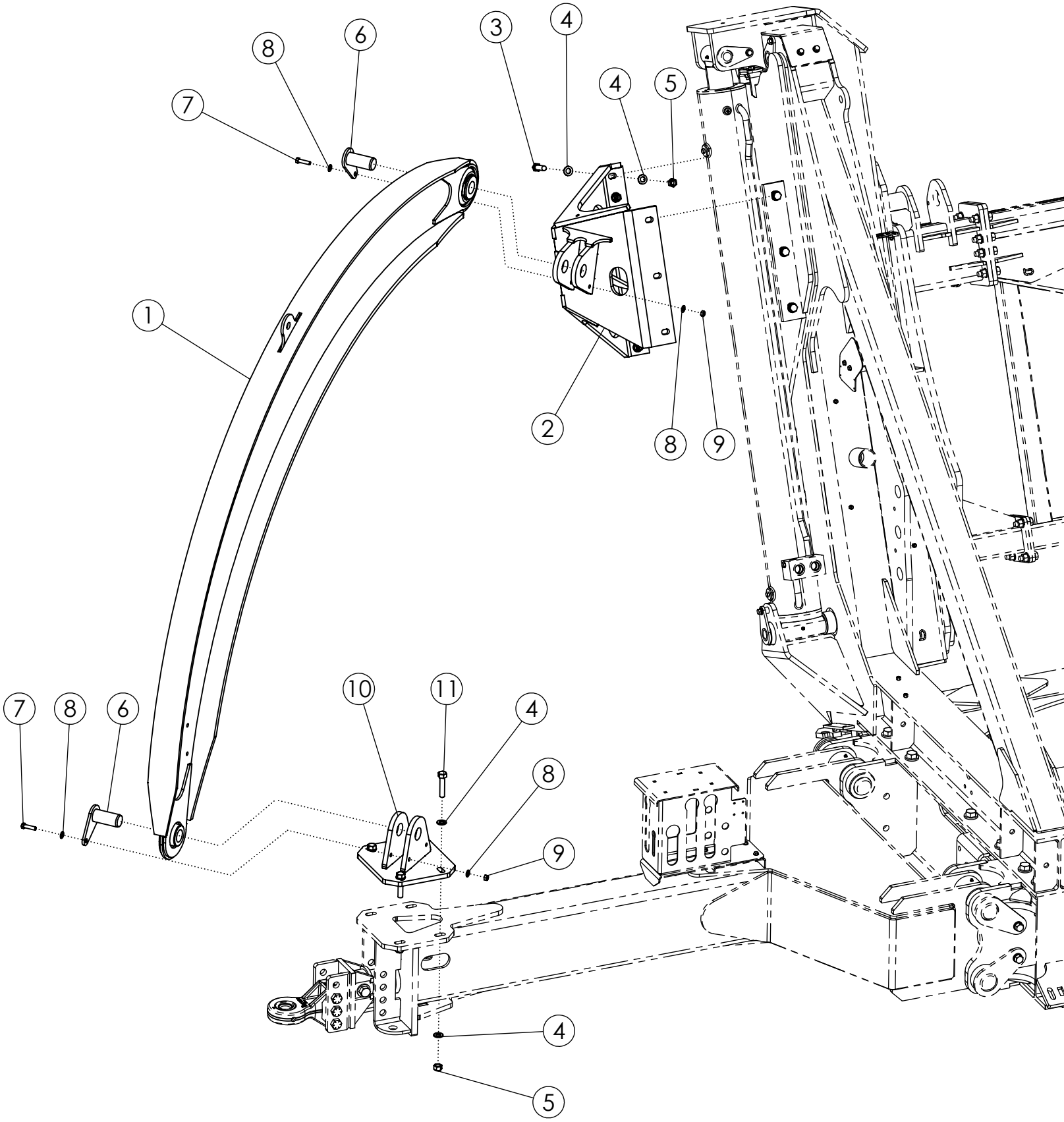
1
2
3
4
5
6
7
8
9
10
11

ARCH			
ITEM	PART NO.	DESCRIPTION	QTY
1	318040	ASSY-CC1000 ARCH PC	1
2	318615	WLDMT-ARCH UPPER MOUNT (RH ONLY)	1
3	66495	BOLT-HEX: .75 X 2.75 NC GR8 YZP	9
4	35132	WASHER-FLAT: SAE .75 YZP GR8	26
5	1017000	NUT-TOPLOCK: .75 NC GR5 ZP	13
6	318613	WLDMT-ARCH FLAG PIN ZP	2
7	1011609	BOLT-HEX: .50 X 2.00 NC GR5 ZP	2
8	1011584	WASHER-FLAT: SAE .50 ZP	4
9	1027461	NUT-TOPLOCK: .50 NC GR5 ZP	2
10	318402	WLDMT-ARCH TO HITCH MOUNT (RH ONLY)	1
11	1032289	BOLT-HEX: .75 X 3.50 NC GR8 YZP	4

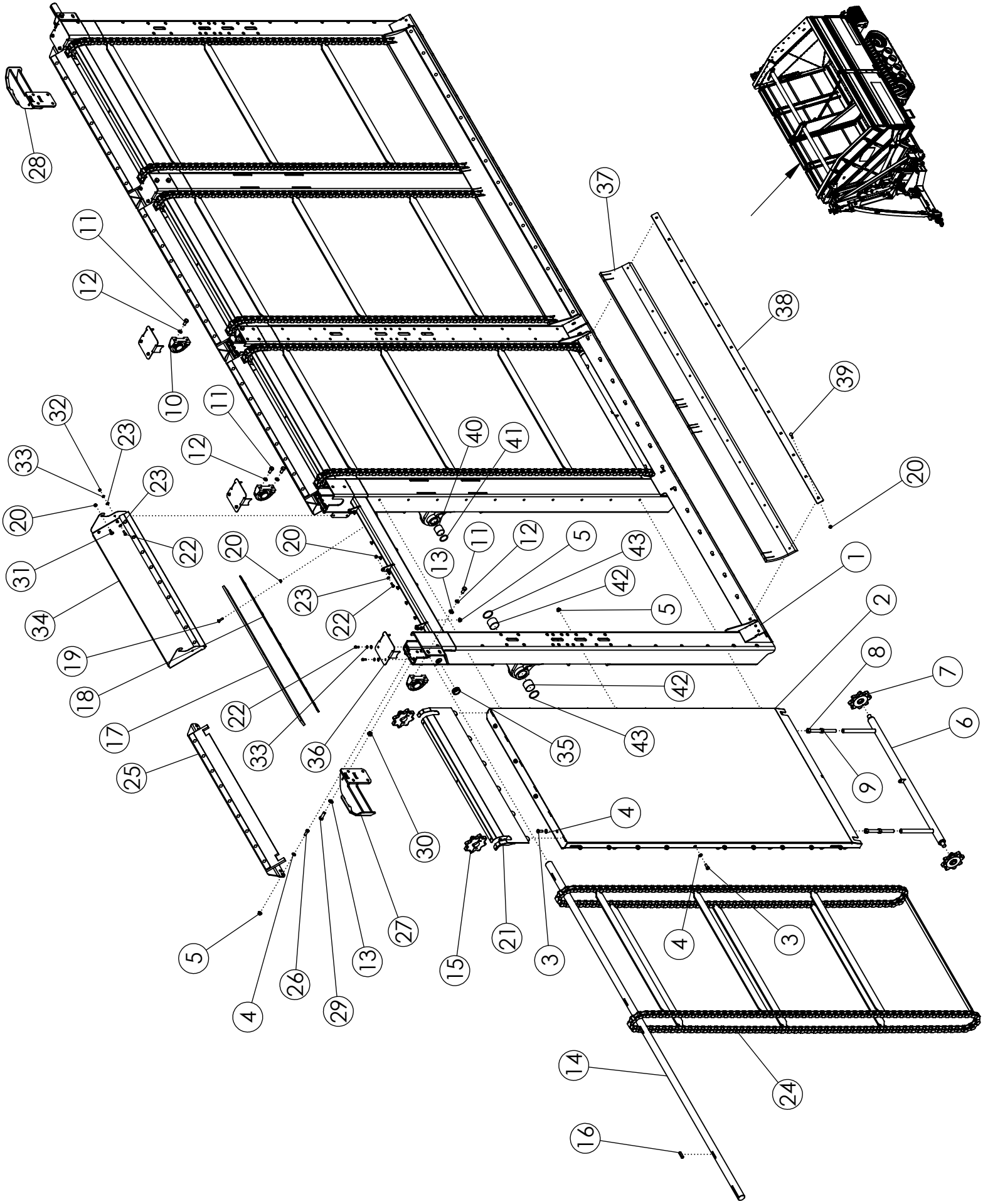
28
11
12
10
11
12
32
23
33
23
20
31
22
34
19
18
17
20
20
23
22
22
33
36
25
40
41
13
11
12
5
43
42
5
42
43
35
37
38
39
20
1
2
8
7
6
9
4
30
27
13
26
29
4
5
15
21
3
4
3
14
24
16

UNLOAD WALL

ITEM	PART NO.	DESCRIPTION	QTY
1	318183	WLDMT-UNLOAD WALL FRAME	1
2	318149	WLDMT-UNLOAD PANEL PC	4
3	1011606	BOLT-HEX: .50 X 1.25 NC GR5 ZP	96
4	1011584	WASHER-FLAT: SAE .50 ZP	112
5	303774	NUT-FLANGE: TOPLOCK .50 NC YZP	112
6	318041	WLDMT-CHAIN TENSIONER	4
7	318017	SPROCKET-PINTLE 8T IDLER W/BEARING	8
8	310788	WLDMT-FLOOR TENSIONER ROD ZP	8
9	1011620	NUT-HEX: .75 NC GR2 ZP	8
10	62136	BEARING-TAPPED BASE 2.00"	6
11	1032509	BOLT-HEX: .63 X 1.25 NC GR5 ZP	8
12	1011813	WASHER-LOCK: .63 ZP	8
13	1013004	WASHER-FLAT: SAE .63 ZP	10
14	318027	SHAFT-UNLOAD CHAIN DRIVE 2"	2
15	318016	SPROCKET-SPLIT PINTLE 8T X 2"BORE X 1/2"KEY	8
16	57995	KEY .500 X .500 X 2.000	8
17	319057	RUBBER-CHAIN BOTTOM WIPER	4
18	319058	PLATE-CHAIN RUBBER CLAMP	4
19	58679	BOLT-CRG: .38 X 1.50 NC GR5 ZP	36
20	303731	NUT-FLANGE: TOPLOCK .38 NC YZP	96
21	318593	WLDMT-SHAFT COVER	4
22	1011600	BOLT-HEX: .38 X 1.00 NC GR5 ZP	42
23	1014608	WASHER-FLAT: SAE .38 ZP	50
24	318008	PINTLE CHAIN-CC1000	4
25	319210	ASSY-UNLOAD CHAIN WIPER	4
26	1011607	BOLT-HEX: .50 X 1.50 NC GR5 ZP	16
27	318790	WLDMT-TANK SKID FRONT	1
28	318791	WLDMT-TANK SKID REAR	1
29	1011623	BOLT-HEX: .63 X 2.00 NC GR5 ZP	8
30	34864	NUT-FLANGE: TOPLOCK .63 NC GR8 ZP	8
31	319052	BOLT-SHOULDER: 1/2"X 1/2" SHLD LENGTH X 3/8"-16 THRD	8
32	1011576	NUT-HEX: .38 NC GR2 ZP	8
33	1011586	WASHER-LOCK: .38 ZP	18
34	319051	ASSY-HOOK ON GRAIN CHUTE	4
35	301025	GROMMET-RUBBER 1.50" ID	2
36	318100	PLATE-UNLOAD TUBE CAP	5
37	319055	RUBBER-UNLOAD WALL BOTTOM SEAL CLAMP	2
38	319056	PLATE-UNLOAD WALL BOTTOM SEAL CLAMP	2
39	1060241	BOLT-CRG: .38 X 2.00 NC GR5 ZP	28
40	318054	BUSHING-IGLIDE Q2 SLEEVE 2.5"IDX2.25"ODX2"L	6
41	318125	O-RING: .210 X 1.975	6
42	318087	BUSHING-IGLIDE Q2 SLEEVE 2.5"IDX2.68"ODX2"L	4
43	318126	O-RING: .210 X 2.475	4
44	65393	LOCKTITE-DEVCON 22425 1.69 OZ	1

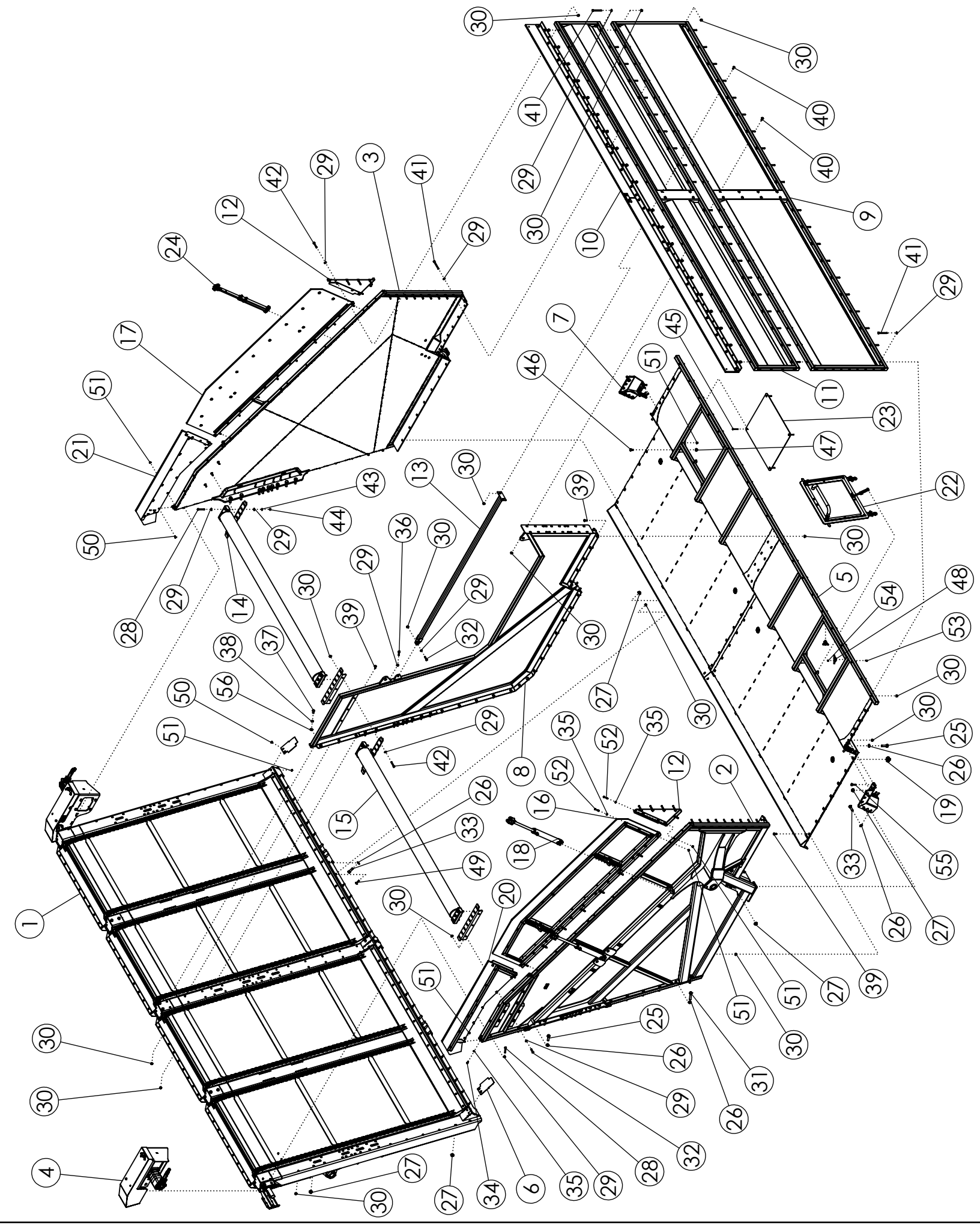
1
2
3
4
5
6
7
8
9
10
11
12
13
14
15
16
17
18
19
20
21
22
23
24
25
26
27
28
29
30
31
32
33
34
35
36
37
38
39
40
41
42
43
44
45
46
47
48
49
50
51
52
53
54
55
56

TANK			
ITEM	PART NO.	DESCRIPTION	QTY
1	318021	ASSY-UNLOAD WALL	1
2	319079	WLDMT-TANK FRONT WALL PC	1
3	319081	WLDMT-TANK REAR WALL PC	1
4	319054	ASSY-FLOOR CHAIN MOTORS	1
5	318174	WLDMT-FLOOR MAIN PC	1
6	319091	PLATE-CORNER COVER	2
7	318539	WLDMT-TANK CORNER SUPPORT	2
8	318243	WLDMT-TANK CENTER PANEL PC	1
9	319192	WLDMT-FILL WALL BASE PC	1
10	318013	ASSY-FILL WALL RUBBER CC1000	1
11	318228	WLDMT-11FT TANK EXTENSION PC	1
12	319284	ASSY-FILL EXTENSION SUPPORT	1
13	318289	WLDMT-EXTENSION WALL SUPPORT	1
14	319191	PLATE-SLIDING TUBE MOUNT	4
15	318044	WLDMT-LOAD RETENTION TUBE	2
16	319250	ASSY-TANK DOOR FRONT	1
17	319251	ASSY-TANK DOOR REAR	1
18	318892	CYLINDER-HYD 2 X 16 (TIE-ROD)	2
19	316294	PLASTIC-2" DRAIN PLUG	4
20	319272	ASSY-TANK TOP EXTENSION FRONT	1
21	319273	ASSY-TANK TOP EXTENSION REAR	1
22	319302	ASSY-TANK ACCESS DOOR	1
23	319323	PLATE-TANK ACCESS COVER	1
24	319207	ASSY-TOP DOOR LOCK UP BAR	2
25	1032291	BOLT-HEX: .75 X 3.00 NC GR8 YZP	40
26	35132	WASHER-FLAT: SAE .75 YZP GR8	60
27	303775	NUT-FLANGE: TOPLOCK .75 NC YZP	60
28	1011612	BOLT-HEX: .50 X 3.50 NC GR5 ZP	24
29	1011584	WASHER-FLAT: SAE .50 ZP	130
30	303774	NUT-FLANGE: TOPLOCK .50 NC YZP	226
31	319346	BOLT-HEX: .75 X 4.50 NC GR8 YZP	4
32	1011609	BOLT-HEX: .50 X 2.00 NC GR5 ZP	7
33	62096	BOLT-HEX: .75 X 2.50 NC GR8 ZP	16
34	1011600	BOLT-HEX: .38 X 1.00 NC GR5 ZP	4
35	1014608	WASHER-FLAT: SAE .38 ZP	24
36	62148	BOLT-HEX: .50 X 2.50 NC GR8 ZP	18
37	1014349	BOLT-HEX: .63 X 1.50 NC GR5 ZP	2
38	1011813	WASHER-LOCK: .63 ZP	2
39	1011660	BOLT-CRG: .50 X 1.50 NC GR5 ZP	74

CONTINUED

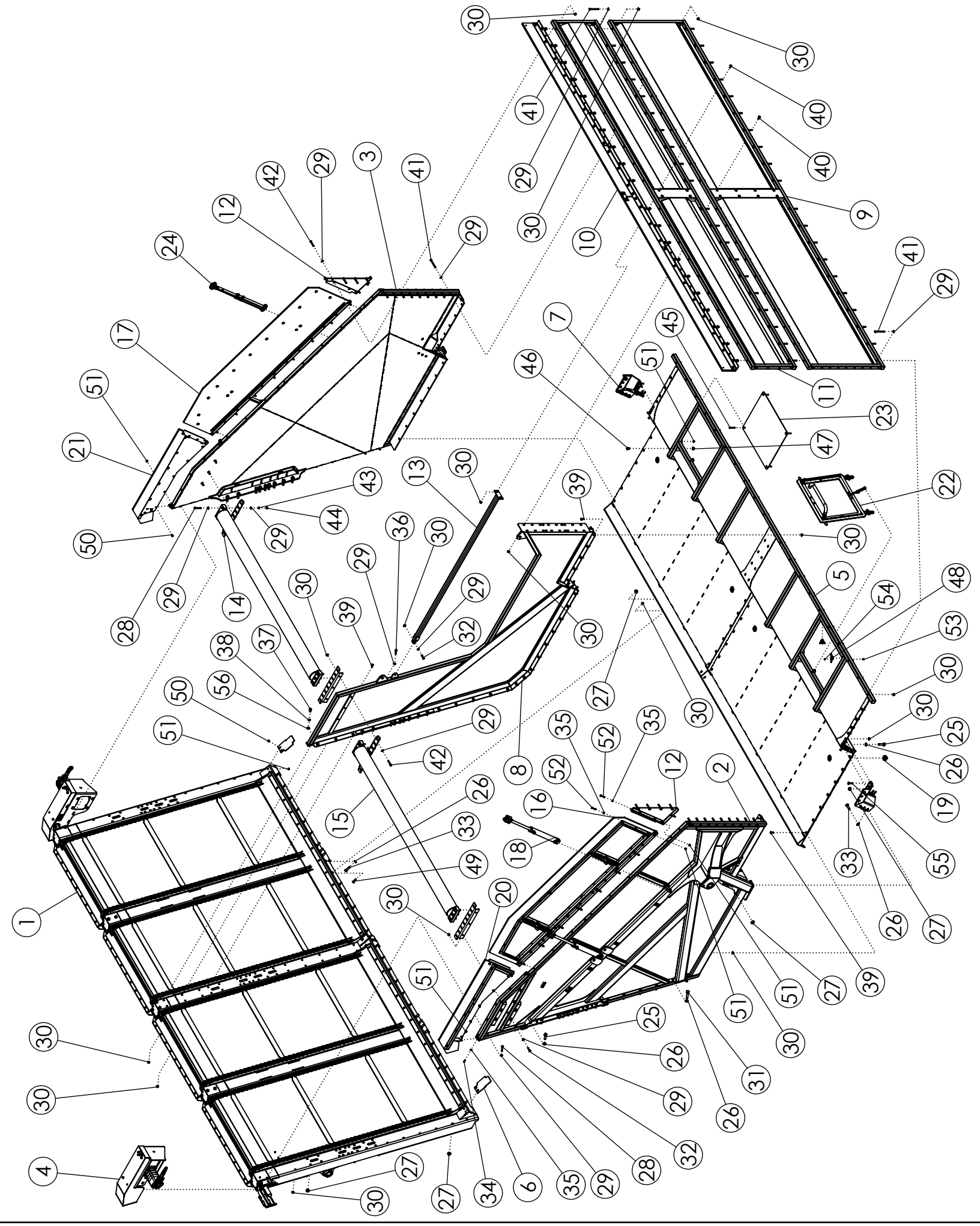
1
2
3
4
5
6
7
8
9
10
11
12
13
14
15
16
17
18
19
20
21
22
23
24
25
26
27
28
29
30
31
32
33
34
35
36
37
38
39
40
41
42
43
44
45
46
47
48
49
50
51
52
53
54
55
56

TANK (CONTINUED)			
ITEM	PART NO.	DESCRIPTION	QTY
40	1023854	BOLT-CRG: .50 X 1.25 NC GR5 ZP	12
41	1011618	BOLT-HEX: .50 X 5.00 NC GR5 ZP	58
42	1011611	BOLT-HEX: .50 X 3.00 NC GR5 ZP	11
43	1011581	WASHER-LOCK: .50 ZP	12
44	1011577	NUT-HEX: .50 NC GR2 ZP	12
45	1030879	BOLT-CRG: .38 X 3.00 NC GR5 ZP	4
46	1032275	BOLT-HEX: .63 X 1.00 NC GR5 ZP	2
47	34864	NUT-FLANGE: TOPLOCK .63 NC GR8 ZP	2
48	319316	PLATE-RUBBER DRAWLATCH CATCH	2
49	44122	BOLT-CRG: .50 X 2.00 NC GR5 ZP	26
50	59488	BOLT-CRG: .38 X 1.00 NC GR5 ZP	14
51	303731	NUT-FLANGE: TOPLOCK .38 NC YZP	42
52	1013239	BOLT-HEX: .38 X 3.00 NC GR5 ZP	20
53	68602	BOLT-CRG: .25 X .75 NC GR5 ZP	4
54	303777	NUT-FLANGE: TOPLOCK .25 NC YZP	4
55	WR89423	BOLT-CRG: .50 X 2.50 NC GR5 ZP	8
56	1013004	WASHER-FLAT: SAE .63 ZP	2

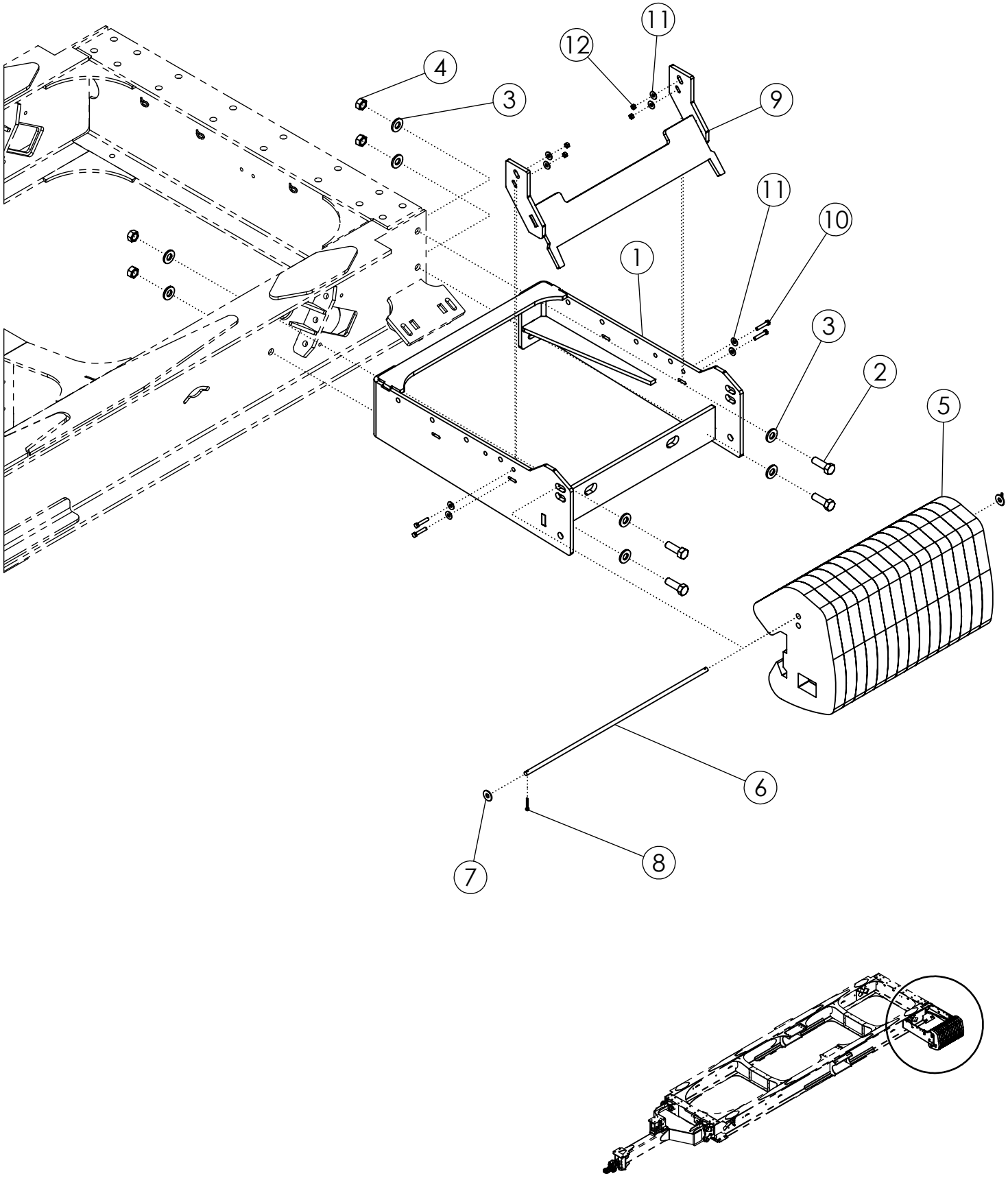
4
3
12
11
9
11
10
1
3
2
5
6
7
8

WEIGHT KIT			
ITEM	**PART NO.**	**DESCRIPTION**	**QTY**
1	318997	WLDMT-WEIGHT BRACKET	1
2	1018008	BOLT-HEX: 1.00 X 3.00 NC GR8 ZP	4
3	1030728	WASHER-FLAT: SAE 1.00 XP GR8	8
4	1016969	NUT-TOPLOCK: 1.00 NC GR5 ZP	4
5	316633	WEIGHT-100 LB FOR SILAGE	15
6	319029	ROD-WEIGHT BRACKET CC1000 ZP	1
7	1013024	WASHER-FLAT: .63 ZP	2
8	1016944	PIN-COTTER: .25 X 2.00 ZP	2
9	319349	WLDMT-WEIGHT CLAMP CC1000	1
10	1011616	BOLT-HEX: .44 X 2.25 NC GR5 ZP	4
11	1011829	WASHER-FLAT: .44 ZP	8
12	1018706	NUT-TOPLOCK: .44 NC GR5 ZP	4

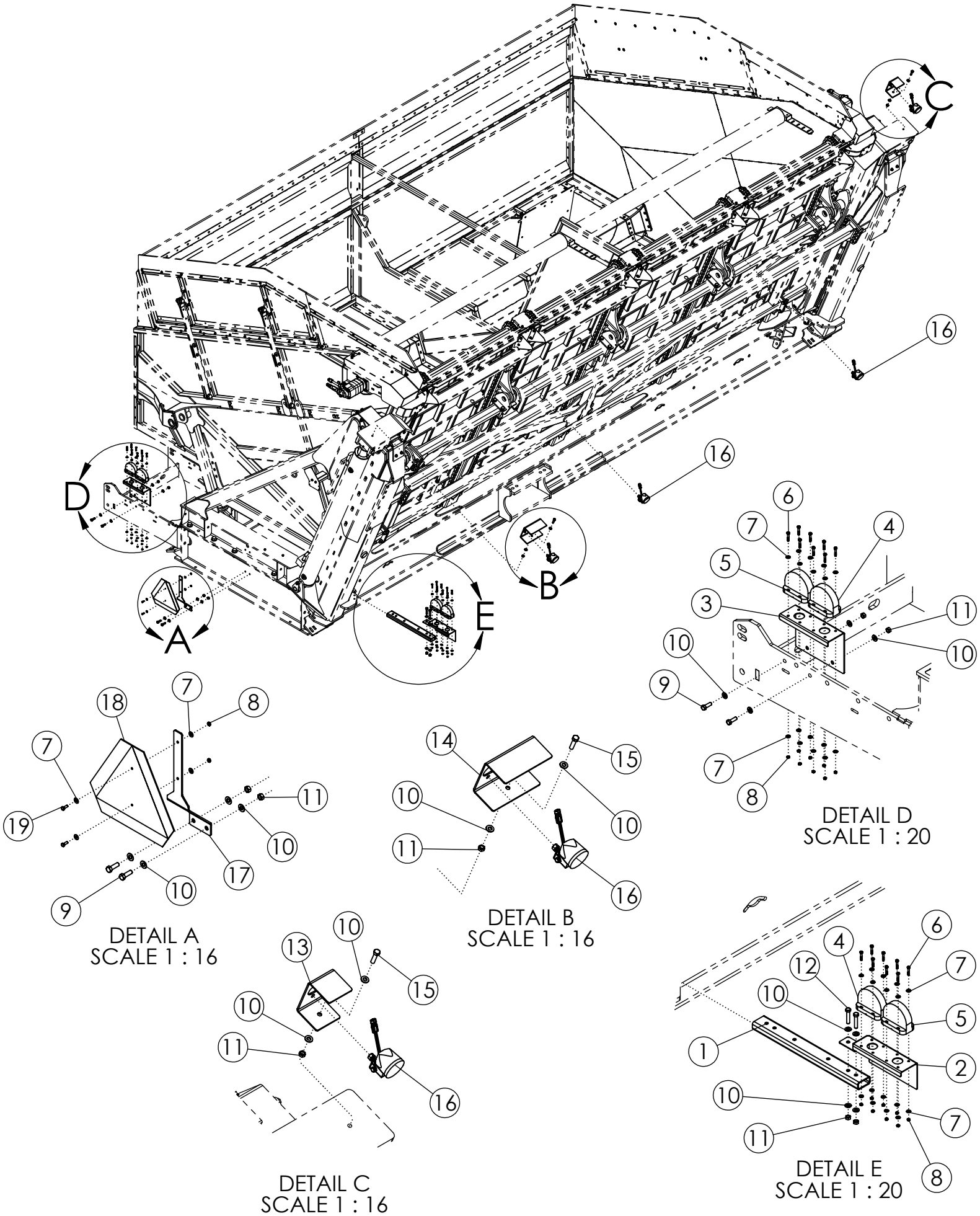
A
B
C
D
E
DETAIL A
SCALE 1 : 16
DETAIL B
SCALE 1 : 16
DETAIL C
SCALE 1 : 16
DETAIL D
SCALE 1 : 20
DETAIL E
SCALE 1 : 20

LIGHT KIT			
ITEM	PART NO.	DESCRIPTION	QTY
1	319181	TUBE-LIGHT MOUNT HARNESS PROTECTION	1
2	319180	PLATE-LIGHT MOUNT RIGHT	1
3	319182	PLATE-LIGHT MOUNT LEFT	1
4	305218	LIGHT-RED LAMP SAE	2
5	305217	LIGHT-YELLOW LAMP SAE	2
6	1019550	BOLT-HEX: .25 X 1.50 NC GR5 ZP	16
7	1020416	WASHER-FLAT: .25 ZP	36
8	1032946	NUT-TOPLOCK: .25 NC GR5 ZP	18
9	1011607	BOLT-HEX: .50 X 1.50 NC GR5 ZP	4
10	1011584	WASHER-FLAT: SAE .50 ZP	16
11	1027461	NUT-TOPLOCK: .50 NC GR5 ZP	8
12	1011610	BOLT-HEX: .50 X 2.50 NC GR5 ZP	2
13	319003	PLATE-WORK LIGHT BRACKET FRONT	1
14	318763	PLATE-CAMERA/LIGHT MOUNT	1
15	1011609	BOLT-HEX: .50 X 2.00 NC GR5 ZP	2
16	301294	LIGHT-GROTE T26 NEAR FLOOD	4
17	318764	PLATE-SMV SIGN MOUNT	1
18	65329	SIGN-SMV ASAE S276.5	1
19	1011595	BOLT-HEX: .25 X .75 NC GR5 ZP	2

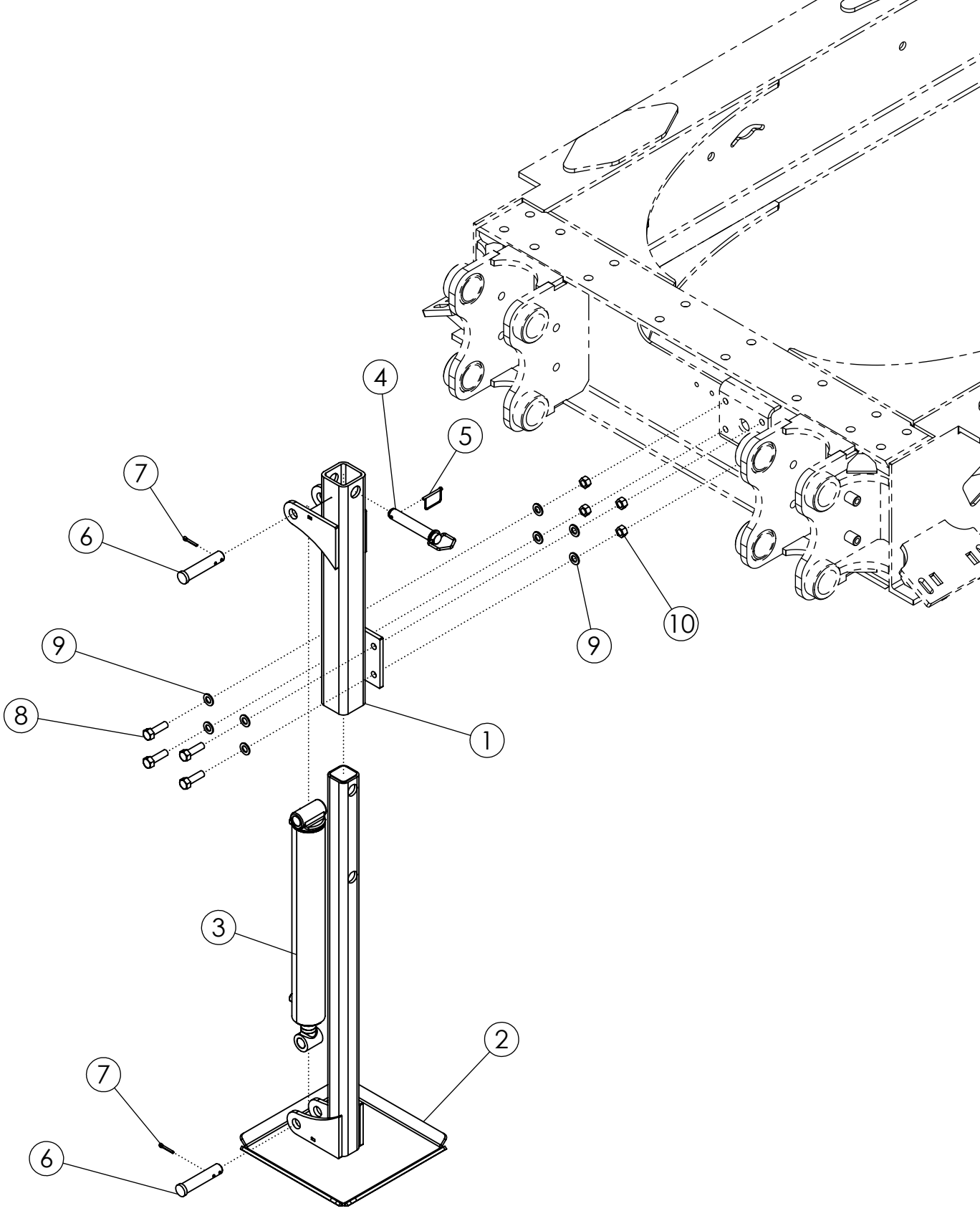
4
5
7
6
9
10
9
8
1
3
2
7
6

HYDRAULIC JACK			
ITEM	PART NO.	DESCRIPTION	QTY
1	318082	WLDMT-JACK HOUSING	1
2	318085	WLDMT-JACK ARM	1
3	318102	CYLINDER-HYD 3.5 X 24	1
4	318872	PIN-HYD JACK PIN	1
5	35970	PIN-SNAP .313 X 2.5	1
6	319001	PIN-CLEVIS 1.250 X 6.000	2
7	1016944	PIN-COTTER: .25 X 2.00 ZP	2
8	1016598	BOLT-HEX: .75 X 2.50 NC GR5 ZP	4
9	1012634	WASHER-FLAT: SAE .75 ZP	8
10	1017000	NUT-TOPLOCK: .75 NC GR5 ZP	4

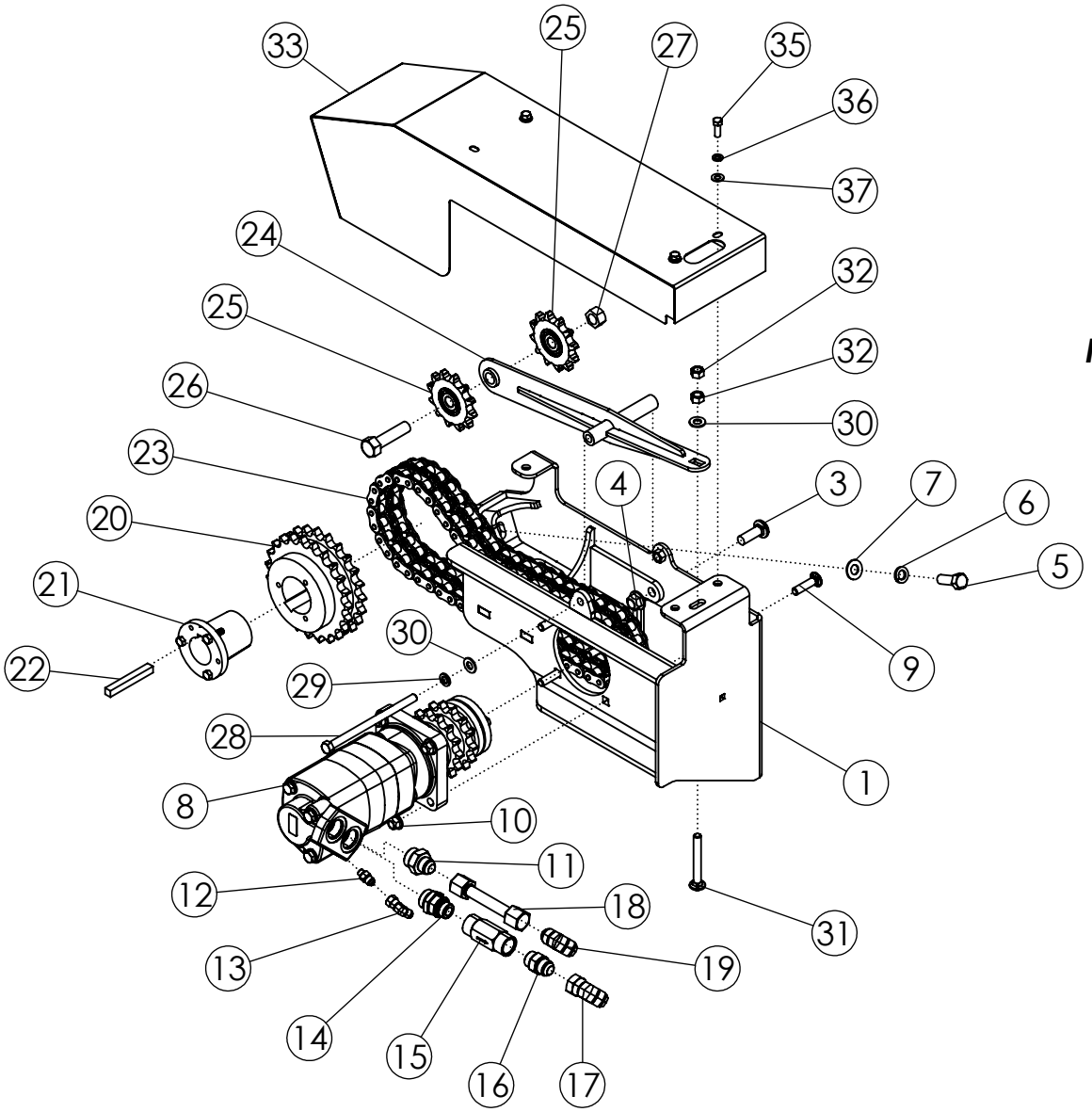

FRONT MOTOR

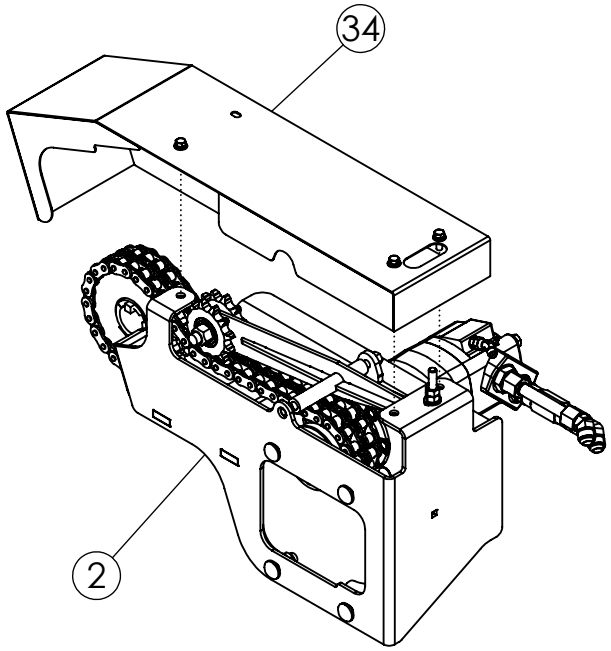

REAR MOTOR

FLOOR CHAIN MOTORS

ITEM	PART NO.	DESCRIPTION	QTY
1	318687	WLDMT-MOTOR MOUNT FRONT	1
2	318688	WLDMT-MOTOR MOUNT REAR	1
3	58635	BOLT-CRG: .63 X 2.00 NC GR5 ZP	8
4	34864	NUT-FLANGE: TOPLOCK .63 NC GR8 ZP	8
5	1013918	BOLT-HEX: .63 X 1.75 NC GR5 ZP	2
6	1011813	WASHER-LOCK: .63 ZP	2
7	1013004	WASHER-FLAT: SAE .63 ZP	2
8	319074	ASSY-CC1000 HYD MOTOR	2
9	44122	BOLT-CRG: .50 X 2.00 NC GR5 ZP	8
10	303774	NUT-FLANGE: TOPLOCK .50 NC YZP	8
11	58982	FTG-ADAPTER: 16MB-12MJ	2
12	300245	FTG-ADAPTER: 4MB-6MJ	2
13	301538	FTG-ELBOW: 6MJ-6FJX-45	2
14	319089	FTG-ADAPTER: 16MB-12MB	2
15	319088	VALVE-CHECK: 12FB-12FB	2
16	65918	FTG-ADAPTER: 12MB-12MJ	2
17	62014	FTG-ELBOW: 12MJ-12FJX-45	2
18	63471	ASSY-TUBE LINE .75 X 5.25 0-0	2
19	319334	FTG-ELBOW: 12MJ-12MJ-45	2
20	318024	SPROCKET H80-2-Q23H	2
21	58248	HUB Q2 2"ID 1/2"KEY	2
22	319031	KEY .500 X .500 X 4.000	2
23	318050	CHAIN-ROLLER 80H-2R-054 (54IN)-PEER	2
24	318732	WLDMT-MOTOR CHAIN TENSIONER	2
25	56334	SPROCKET-IDLER 8012	4
26	1012059	BOLT-HEX: .75 X 3.00 NC GR5 ZP	2
27	1017000	NUT-TOPLOCK: .75 NC GR5 ZP	2
28	1032525	BOLT-HEX: .50 X 8.00 NC GR5 ZP	2
29	1011581	WASHER-LOCK: .50 ZP	2
30	1011584	WASHER-FLAT: SAE .50 ZP	4
31	319078	BOLT-CRG: .50 X 4.00 NC GR5 ZP	2
32	1011577	NUT-HEX: .50 NC GR2 ZP	4
33	318692	WLDMT-MOTOR SHIELD FRONT	1
34	318693	WLDMT-MOTOR SHIELD REAR	1
35	1011600	BOLT-HEX: .38 X 1.00 NC GR5 ZP	6
36	1011586	WASHER-LOCK: .38 ZP	6
37	1014608	WASHER-FLAT: SAE .38 ZP	6

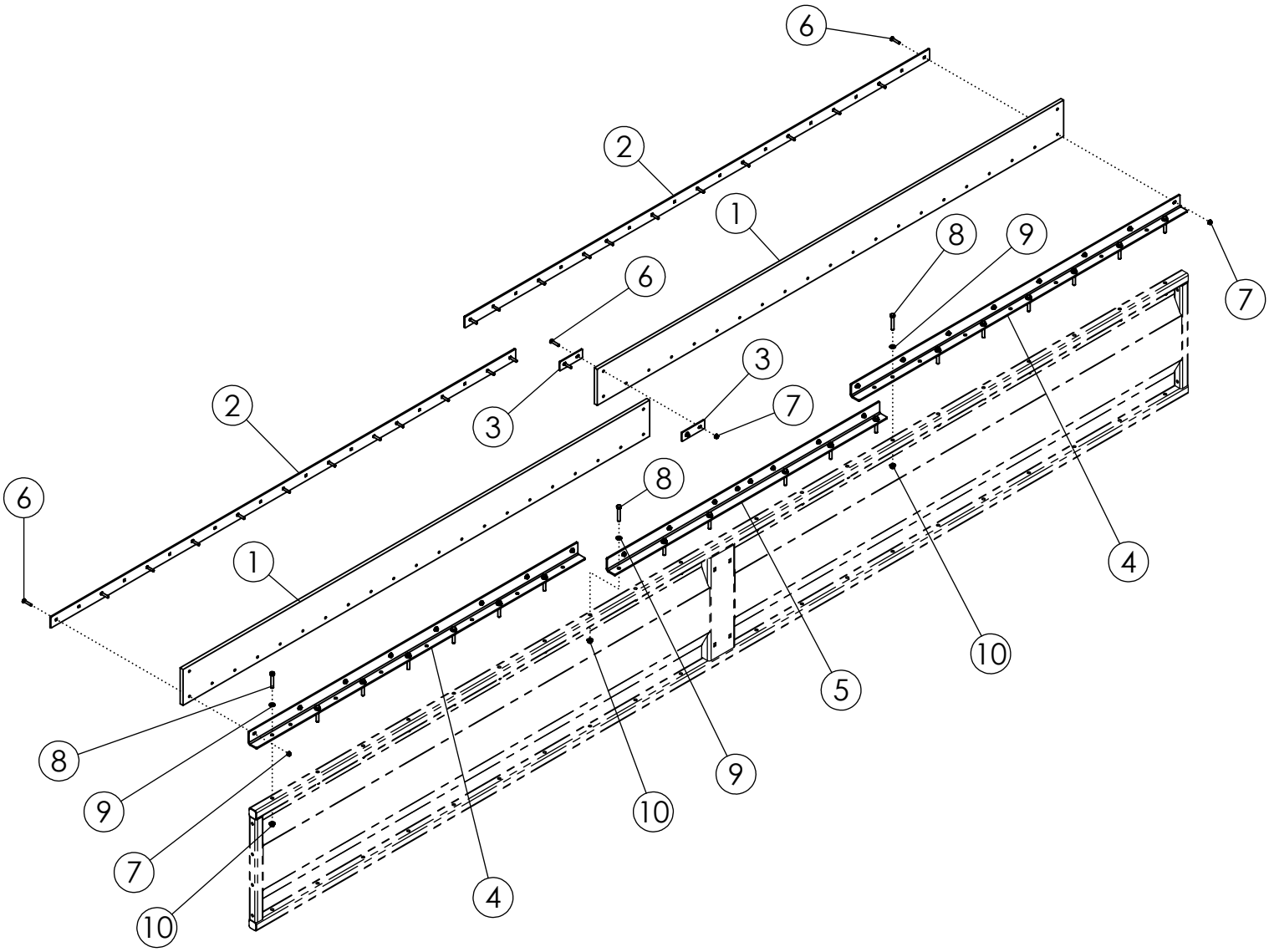
6
2
1
8
9
7
6
3
3
7
2
8
6
1
4
10
5
8
9
9
10
7
10
4

FILL WALL RUBBER

ITEM	PART NO.	DESCRIPTION	QTY
1	318046	RUBBER-TOP FILL STRIP	2
2	318449	PLATE-FILL SIDE RUBBER BACKING STRIP	2
3	318857	PLATE-TOP FILL RUBBER CONNECTION	2
4	319189	PLATE-FILL WALL EXTENSION RUBBER MOUNT END	2
5	319190	PLATE-FILL WALL EXTENSION RUBBER MOUNT MID	1
6	1060241	BOLT-CRG: .38 X 2.00 NC GR5 ZP	26
7	303731	NUT-FLANGE: TOPLOCK .38 NC YZP	26
8	1011611	BOLT-HEX: .50 X 3.00 NC GR5 ZP	20
9	1011584	WASHER-FLAT: SAE .50 ZP	20
10	303774	NUT-FLANGE: TOPLOCK .50 NC YZP	20

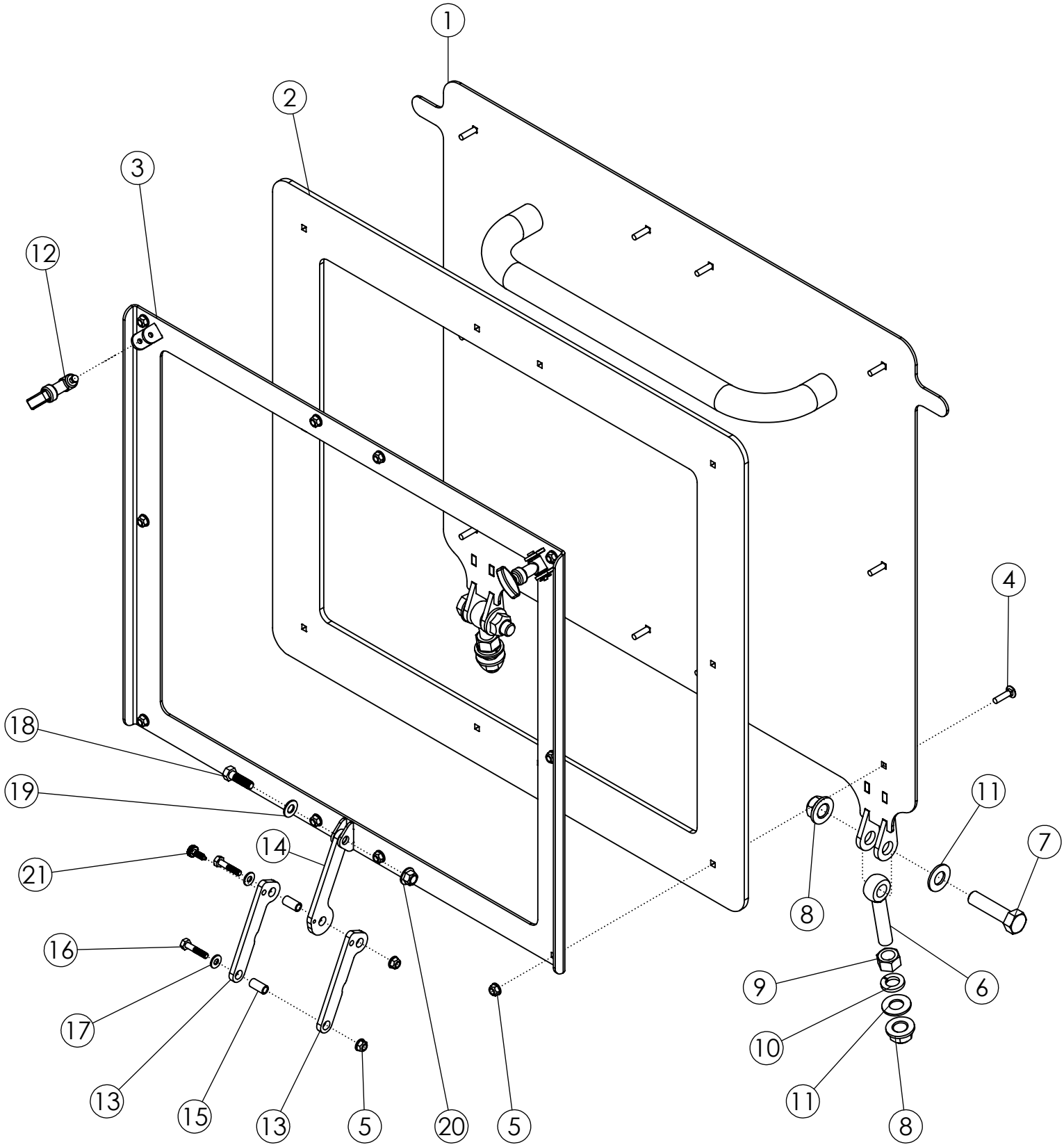
1
2
3
12
4
18
19
21
14
16
17
13
15
13
5
20
5
8
11
7
6
9
10
11
8

TANK ACCESS DOOR

ITEM	PART NO.	DESCRIPTION	QTY
1	319303	WLDMT-TANK ACCESS DOOR	1
2	319306	RUBBER-TANK ACCESS DOOR	1
3	319307	WLDMT-TANK DOOR SUPPORT	1
4	1017254	BOLT-CRG: .25 X 1.00 NC GR5 ZP	10
5	303777	NUT-FLANGE: TOPLOCK .25 NC YZP	12
6	51691	EYEBOLT .63 X 3.25 ZP	2
7	1013023	BOLT-HEX: .63 X 2.50 NC GR5 ZP	2
8	34864	NUT-FLANGE: TOPLOCK .63 NC GR8 ZP	4
9	1011578	NUT-HEX: .63 NC GR2 ZP	2
10	1011813	WASHER-LOCK: .63 ZP	2
11	1013004	WASHER-FLAT: SAE .63 ZP	4
12	319315	LATCH-SMALL RUBBER DRAW LATCH	2
13	319311	PLATE-LOCK UP BAR W/THREAD HOLE ZP	2
14	319312	PLATE-LOCK UP BAR ZP	1
15	319313	TUBE-LOCK UP SPACER ZP	2
16	1013940	BOLT-HEX: .25 X 1.25 NC GR5 ZP	2
17	0100979	WASHER-FLAT: SAE .25 ZP	2
18	1011601	BOLT-HEX: .38 X 1.25 NC GR5 ZP	1
19	1014608	WASHER-FLAT: SAE .38 ZP	1
20	303731	NUT-FLANGE: TOPLOCK .38 NC YZP	1
21	319314	LATCH-SPRING LOADED PIN WITH THREAD LOCKER	1

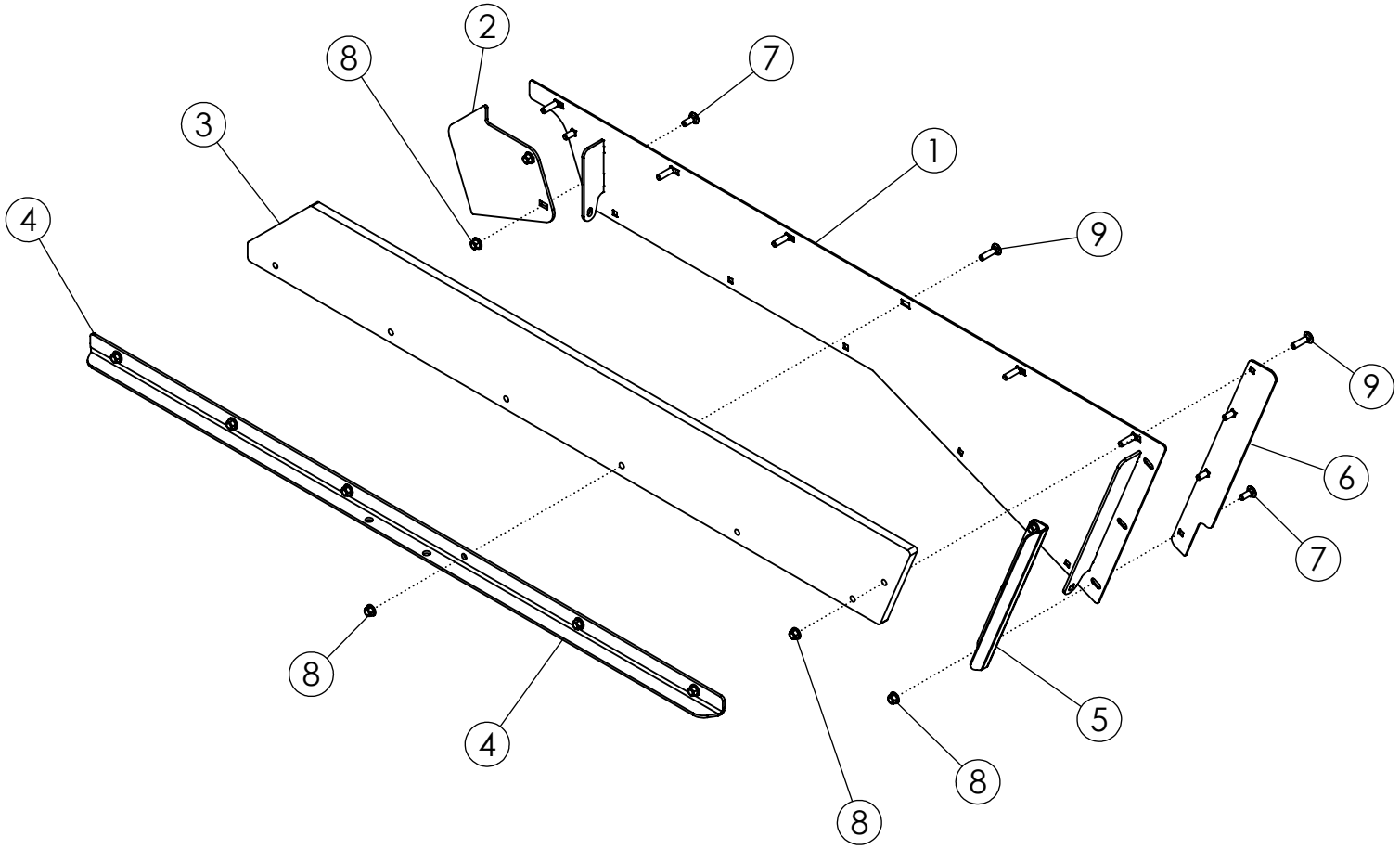
2
8
7
3
1
4
9
9
6
7
8
5
4
8
8

TANK TOP EXTENSION FRONT			
ITEM	PART NO.	DESCRIPTION	QTY
1	319274	WLDMT-TANK TOP EXTENSION FRONT	1
2	319279	PLATE-EXTENSION END	1
3	319280	RUBBER-TANK TOP EXTENSION	1
4	319281	PLATE-TOP EXTENSION CLAMP	1
5	319282	PLATE-DOOR GUIDE TOP	1
6	319283	PLATE-DOOR STOP TOP	1
7	59488	BOLT-CRG: .38 X 1.00 NC GR5 ZP	5
8	303731	NUT-FLANGE: TOPLOCK .38 NC YZP	12
9	58679	BOLT-CRG: .38 X 1.50 NC GR5 ZP	7

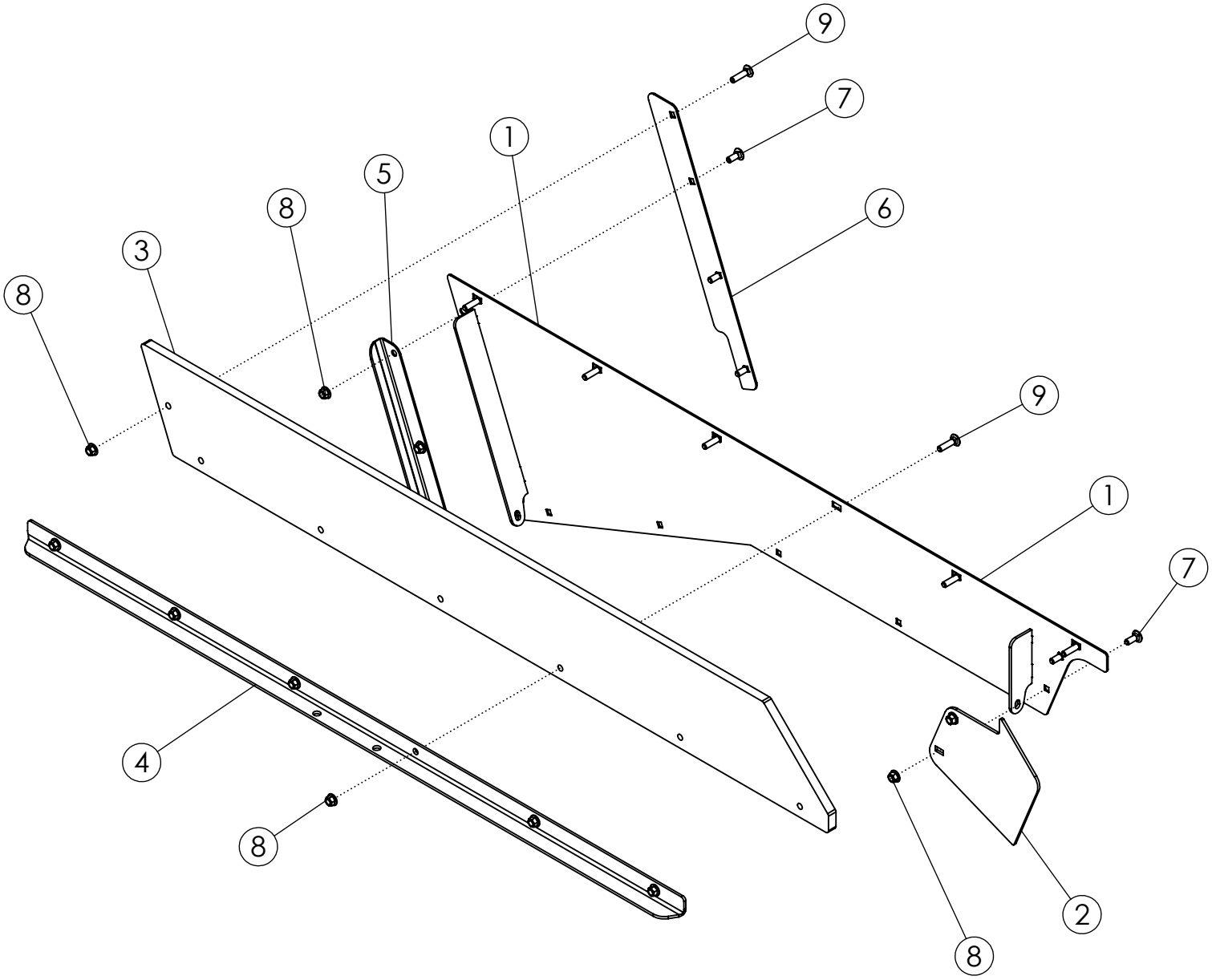
9
7
1
5
8
6
3
8
9
1
7
4
8
2
8

TANK TOP EXTENSION REAR			
ITEM	PART NO.	DESCRIPTION	QTY
1	319275	WLDMT-TANK TOP EXTENSION REAR	1
2	319279	PLATE-EXTENSION END	1
3	319280	RUBBER-TANK TOP EXTENSION	1
4	319281	PLATE-TOP EXTENSION CLAMP	1
5	319282	PLATE-DOOR GUIDE TOP	1
6	319283	PLATE-DOOR STOP TOP	1
7	59488	BOLT-CRG: .38 X 1.00 NC GR5 ZP	5
8	303731	NUT-FLANGE: TOPLOCK .38 NC YZP	12
9	58679	BOLT-CRG: .38 X 1.50 NC GR5 ZP	7

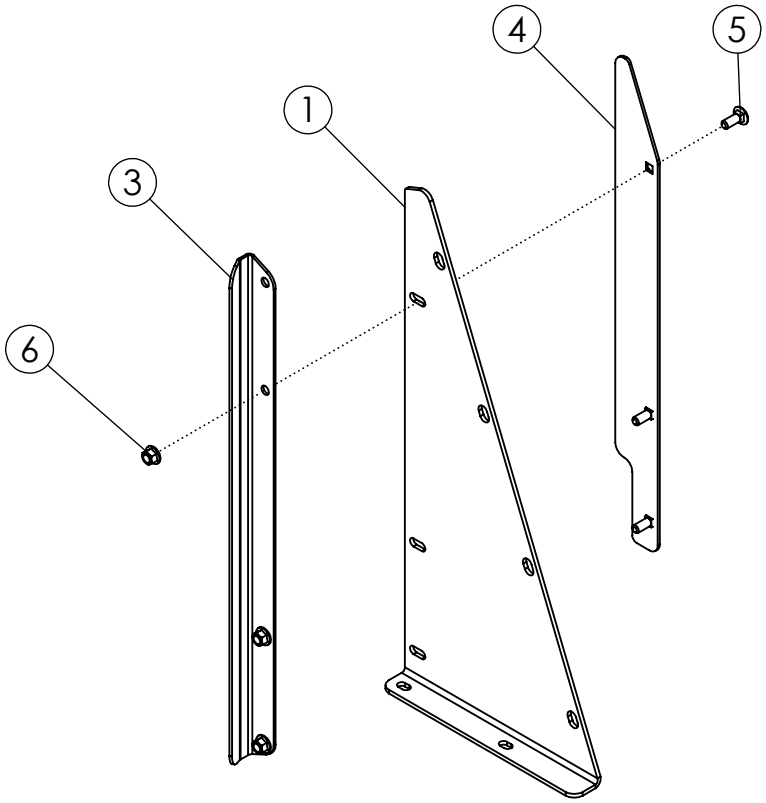

FRONT

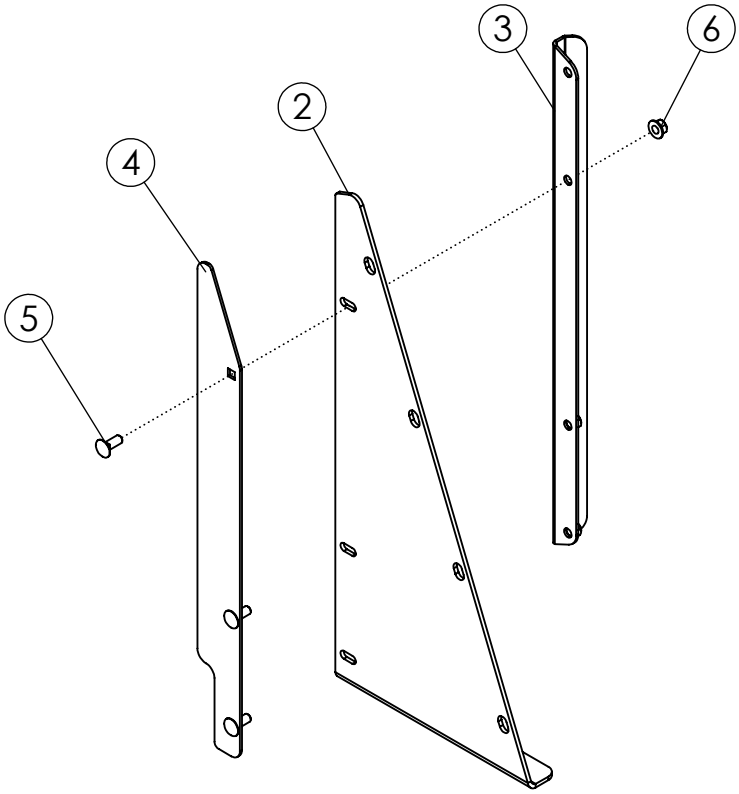

REAR

FILL EXTENSION SUPPORT			
ITEM	PART NO.	DESCRIPTION	QTY
1	319285	PLATE-FILL EXT SUPPORT FRONT	1
2	319286	PLATE-FILL EXT SUPPORT REAR	1
3	319287	PLATE-DOOR GUIDE BOTTOM	2
4	319288	PLATE-DOOR STOP BOTTOM	2
5	59488	BOLT-CRG: .38 X 1.00 NC GR5 ZP	6
6	303731	NUT-FLANGE: TOPLOCK .38 NC YZP	6

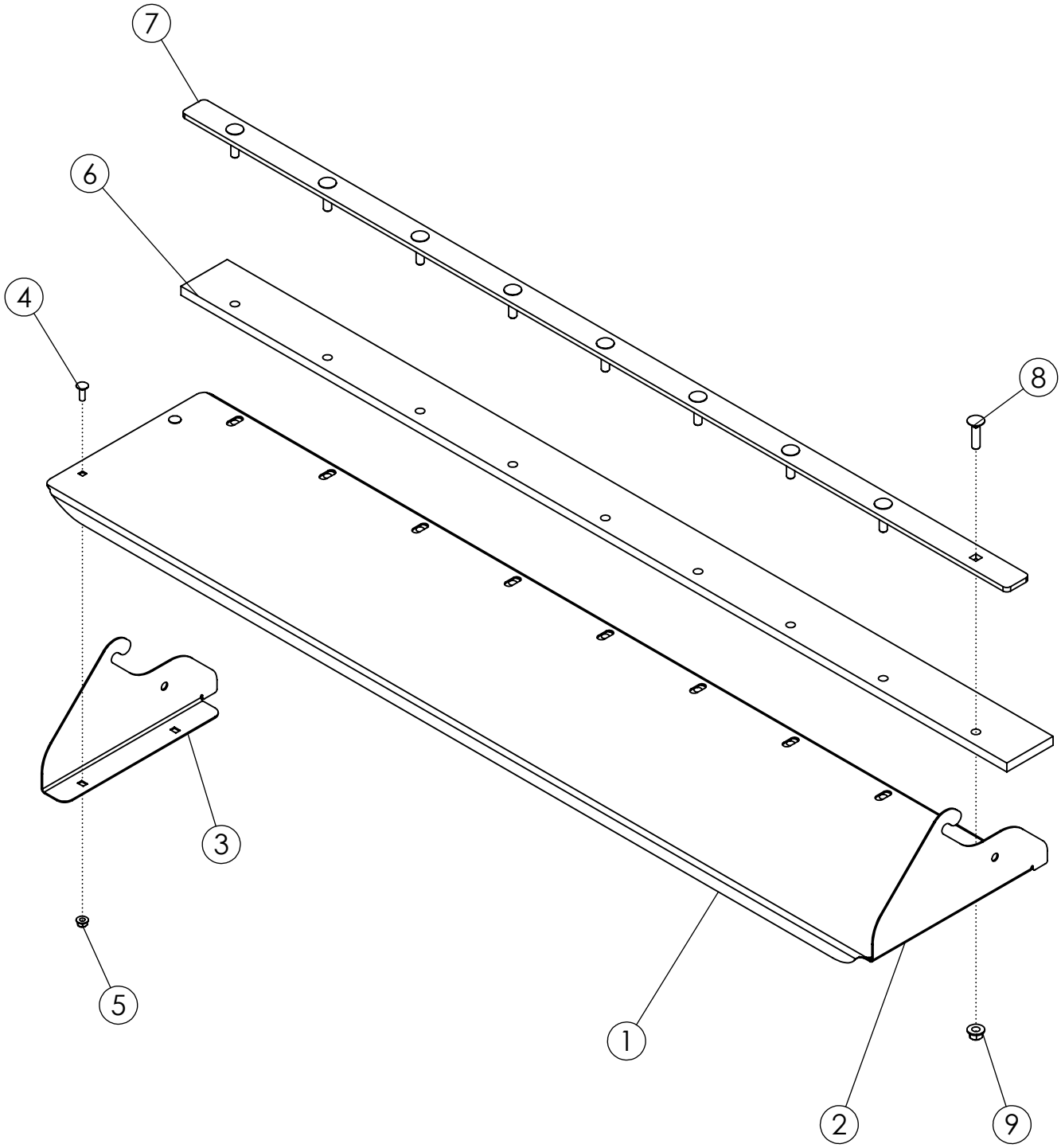
7
6
4
8
3
5
1
2
9

HOOK ON GRAIN CHUTE			
ITEM	PART NO.	DESCRIPTION	QTY
1	319050	PLATE-HOOK ON GRAIN CHUTE	1
2	319068	PLATE-GRAIN CHUTE SIDE RH	1
3	319069	PLATE-GRAIN CHUTE SIDE LH	1
4	68602	BOLT-CRG: .25 X .75 NC GR5 ZP	4
5	303777	NUT-FLANGE: TOPLOCK .25 NC YZP	4
6	319057	RUBBER-CHAIN BOTTOM WIPER	1
7	319058	PLATE-CHAIN RUBBER CLAMP	1
8	58679	BOLT-CRG: .38 X 1.50 NC GR5 ZP	9
9	303731	NUT-FLANGE: TOPLOCK .38 NC YZP	9

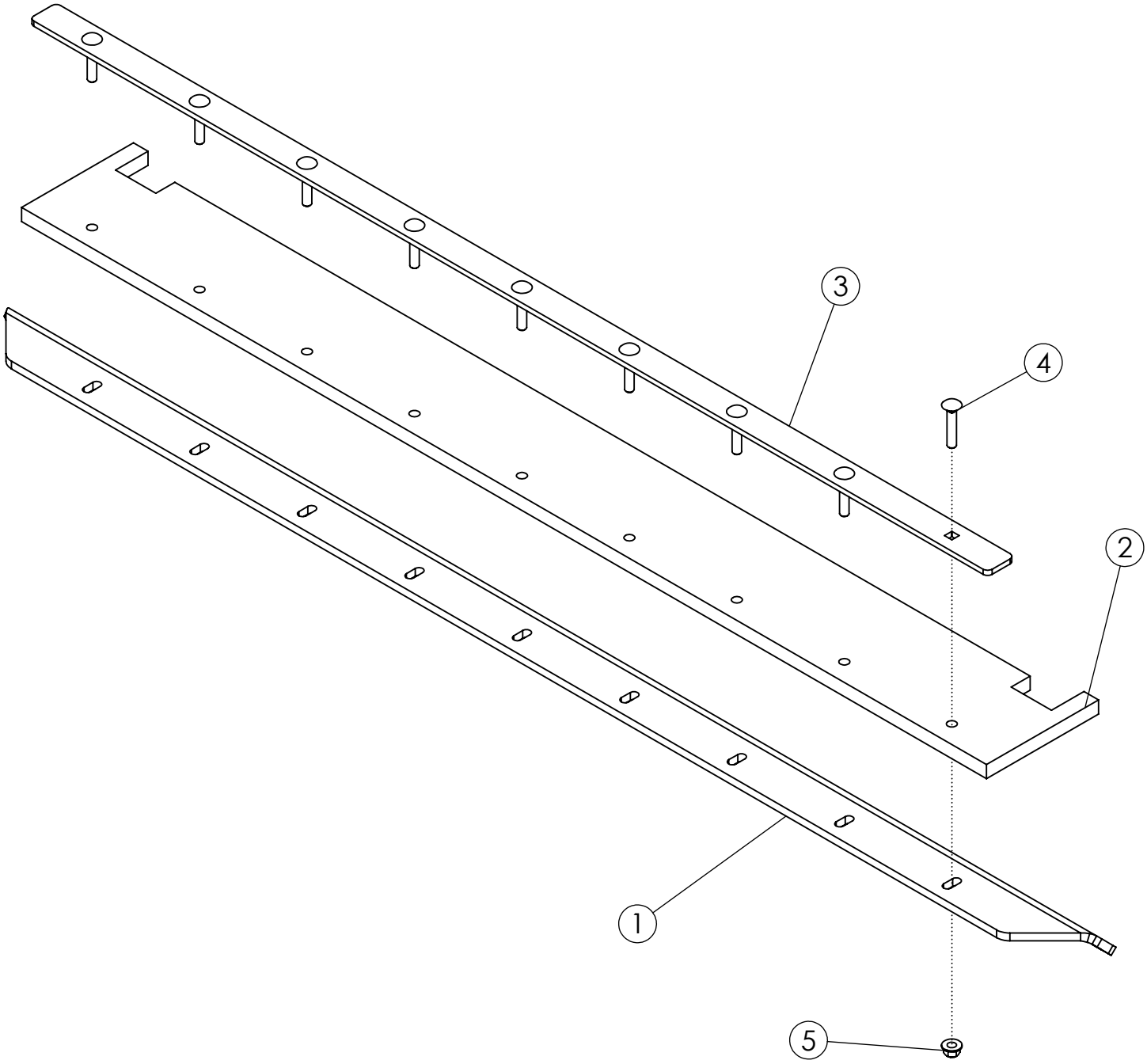
3
4
2
1
5

UNLOAD CHAIN WIPER			
ITEM	PART NO.	DESCRIPTION	QTY
1	319048	PLATE-RUBBER WIPER MOUNT	1
2	319049	RUBBER-CHAIN TOP WIPER	1
3	319058	PLATE-CHAIN RUBBER CLAMP	1
4	1060241	BOLT-CRG: .38 X 2.00 NC GR5 ZP	9
5	303731	NUT-FLANGE: TOPLOCK .38 NC YZP	9

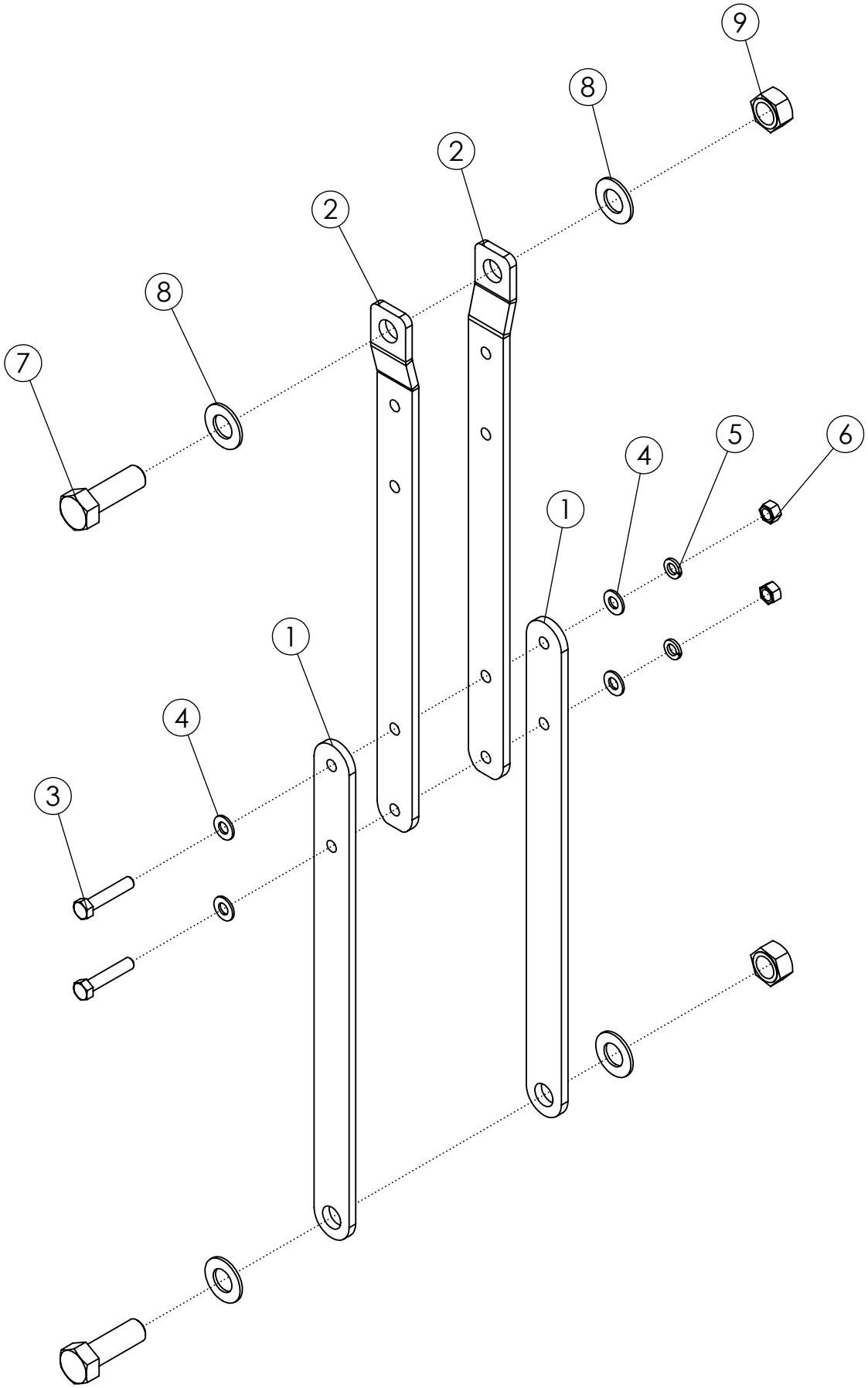
9
8
2
2
8
7
5
6
4
1
1
4
3

TOP DOOR LOCK UP BAR			
ITEM	PART NO.	DESCRIPTION	QTY
1	319208	PLATE-TOP DOOR LOCK UP	2
2	319209	PLATE-TOP DOOR LOCK UP BENT	2
3	1011610	BOLT-HEX: .50 X 2.50 NC GR5 ZP	2
4	1011584	WASHER-FLAT: SAE .50 ZP	4
5	1011581	WASHER-LOCK: .50 ZP	2
6	1011577	NUT-HEX: .50 NC GR2 ZP	2
7	1018007	BOLT-HEX: 1.00 X 3.00 NC GR5 ZP	2
8	1016663	WASHER-FLAT: SAE 1.00 ZP	4
9	1016969	NUT-TOPLOCK: 1.00 NC GR5 ZP	2

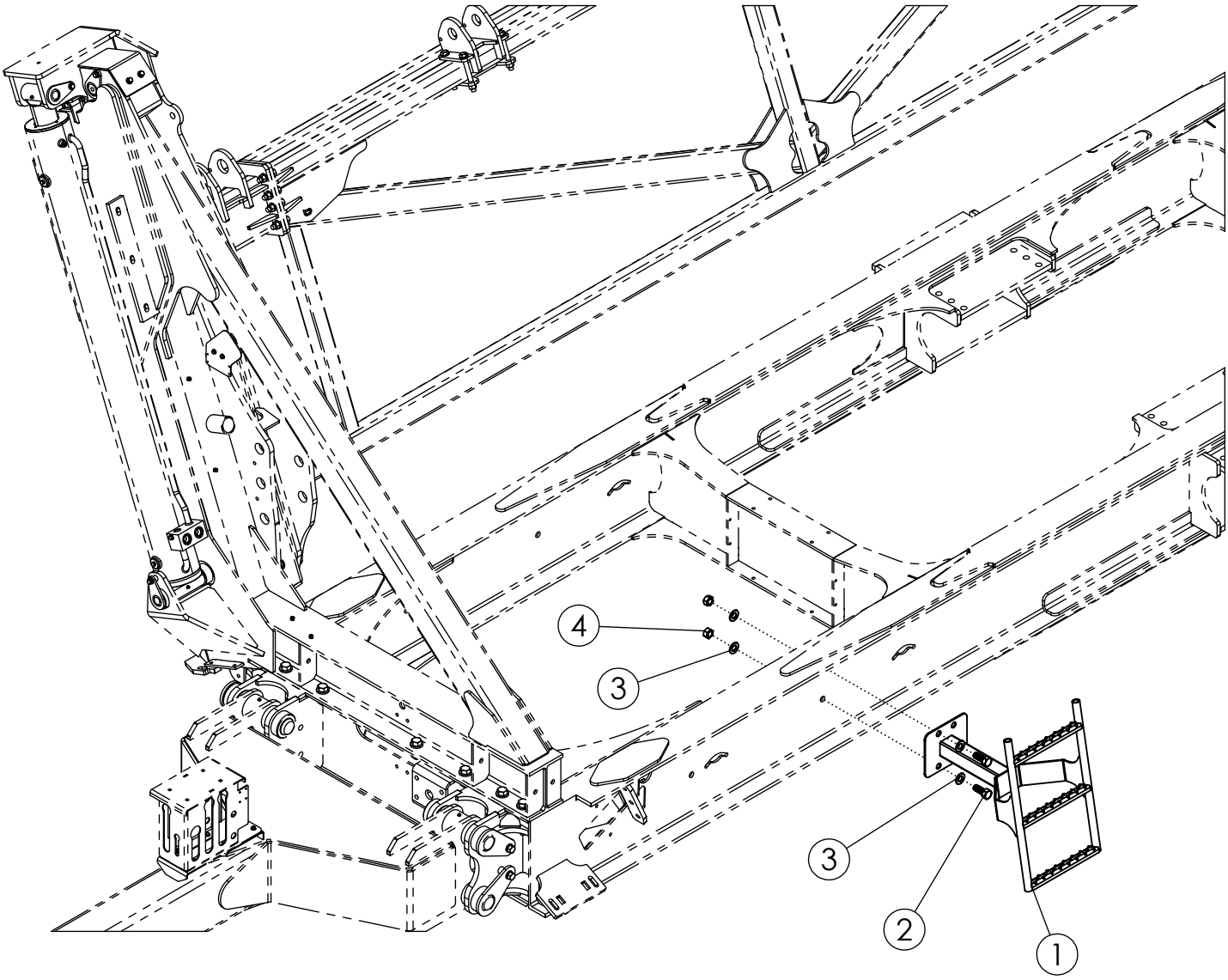
4
3
3
2
1

TANK LADDER			
ITEM	PART NO.	DESCRIPTION	QTY
1	319317	WLDMT-CC1000 TANK ACCESS LADDER	1
2	1023331	BOLT-HEX: 1.00 X 2.50 NC GR5 ZP	2
3	1016663	WASHER-FLAT: SAE 1.00 ZP	4
4	1016969	NUT-TOPLOCK: 1.00 NC GR5 ZP	2

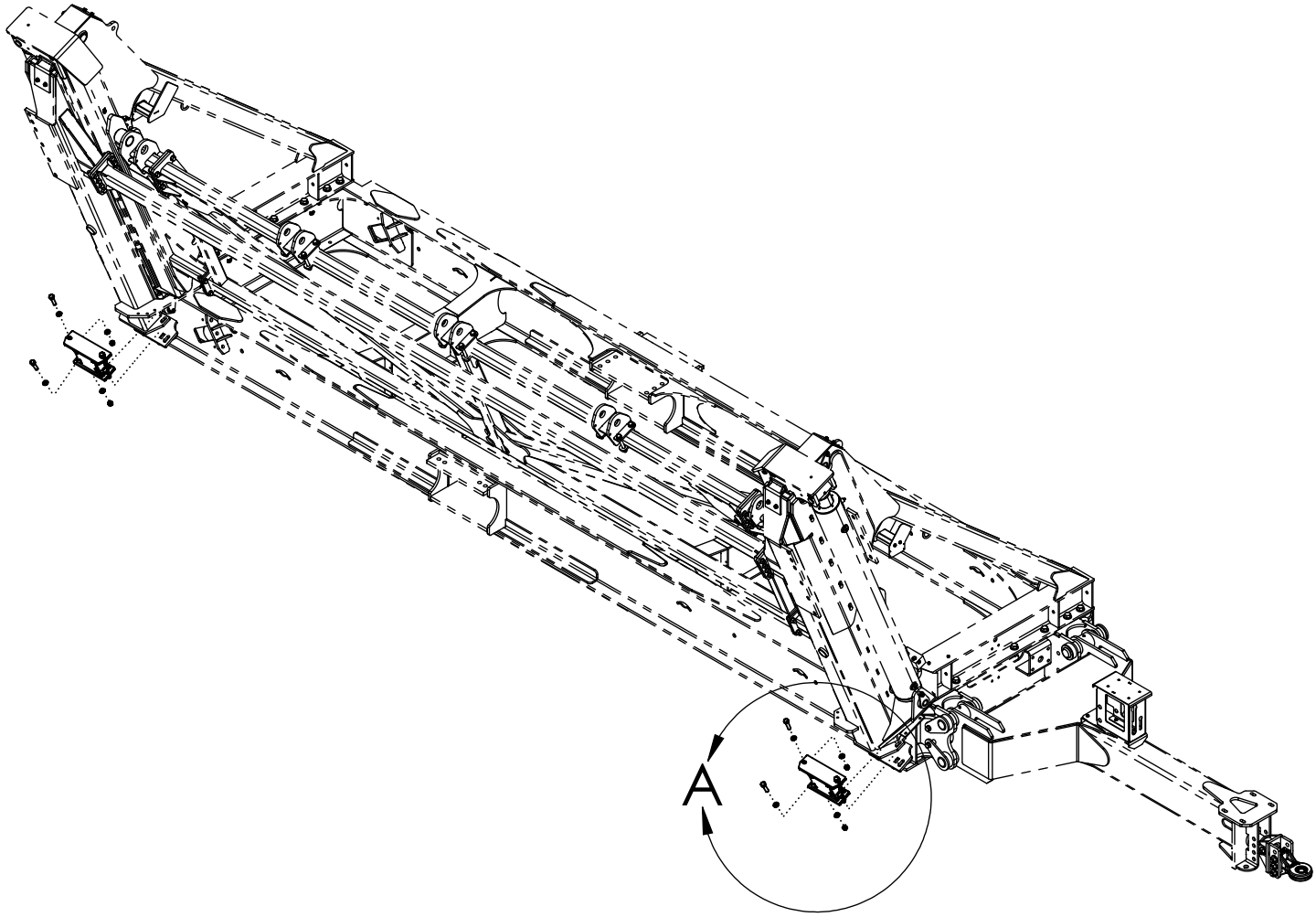
A

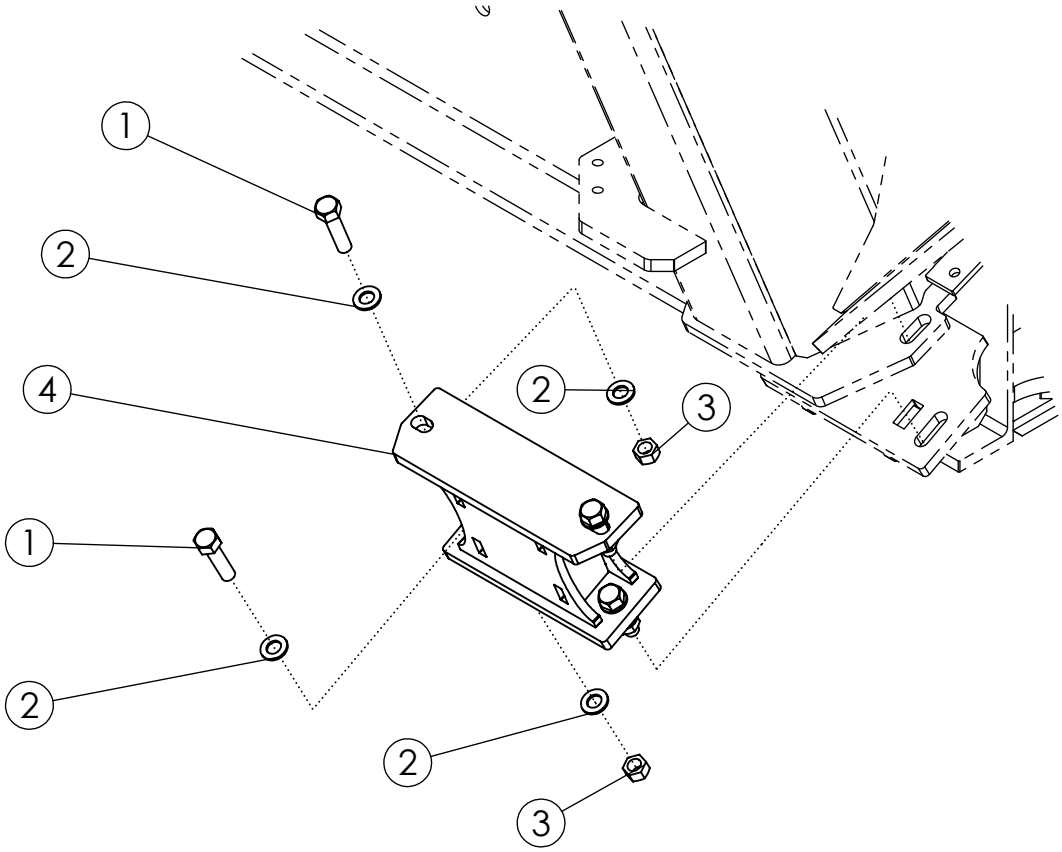
1
2
4
2
3
1
2
2
3

HAUNCH			
ITEM	PART NO.	DESCRIPTION	QTY
1	1032291	BOLT-HEX: .75 X 3.00 NC GR8 YZP	8
2	35132	WASHER-FLAT: SAE .75 GR8 YZP	16
3	1017000	NUT-TOPLOCK: .75 NC GR5 ZP	8
4	318962	WLDMT-HAUNCH PEDESTAL	2

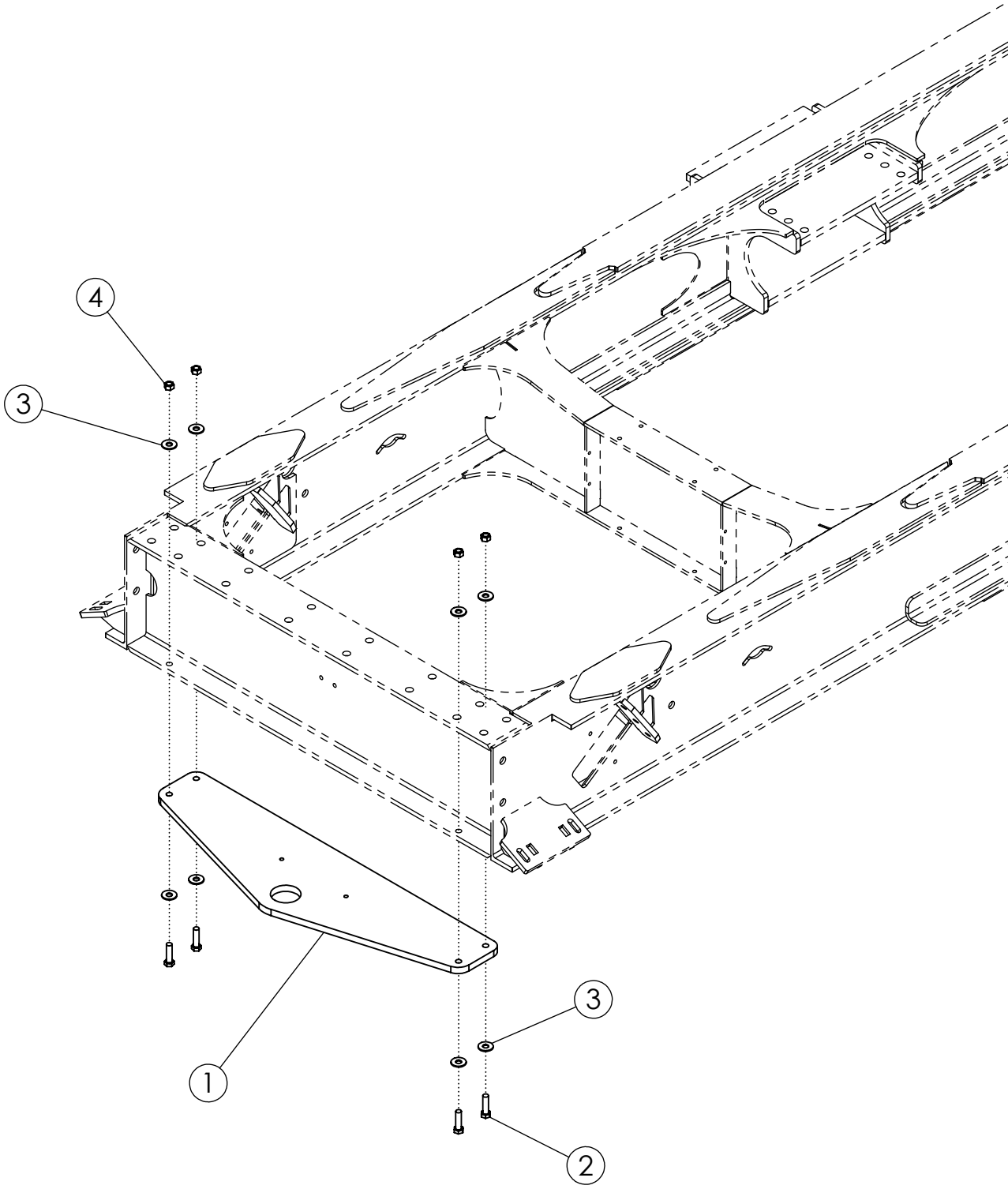
4
3
3
1
2

REVERSE HITCH

ITEM	PART NO.	DESCRIPTION	QTY
1	318880	PLATE-REVERSE HITCH PULL	1
2	66495	BOLT-HEX: .75 X 2.75 NC GR8 YZP	4
3	1030702	WASHER-FLAT: .75 ZP	8
4	1011434	NUT-TOPLOCK: .75 NC GR8 ZP	4

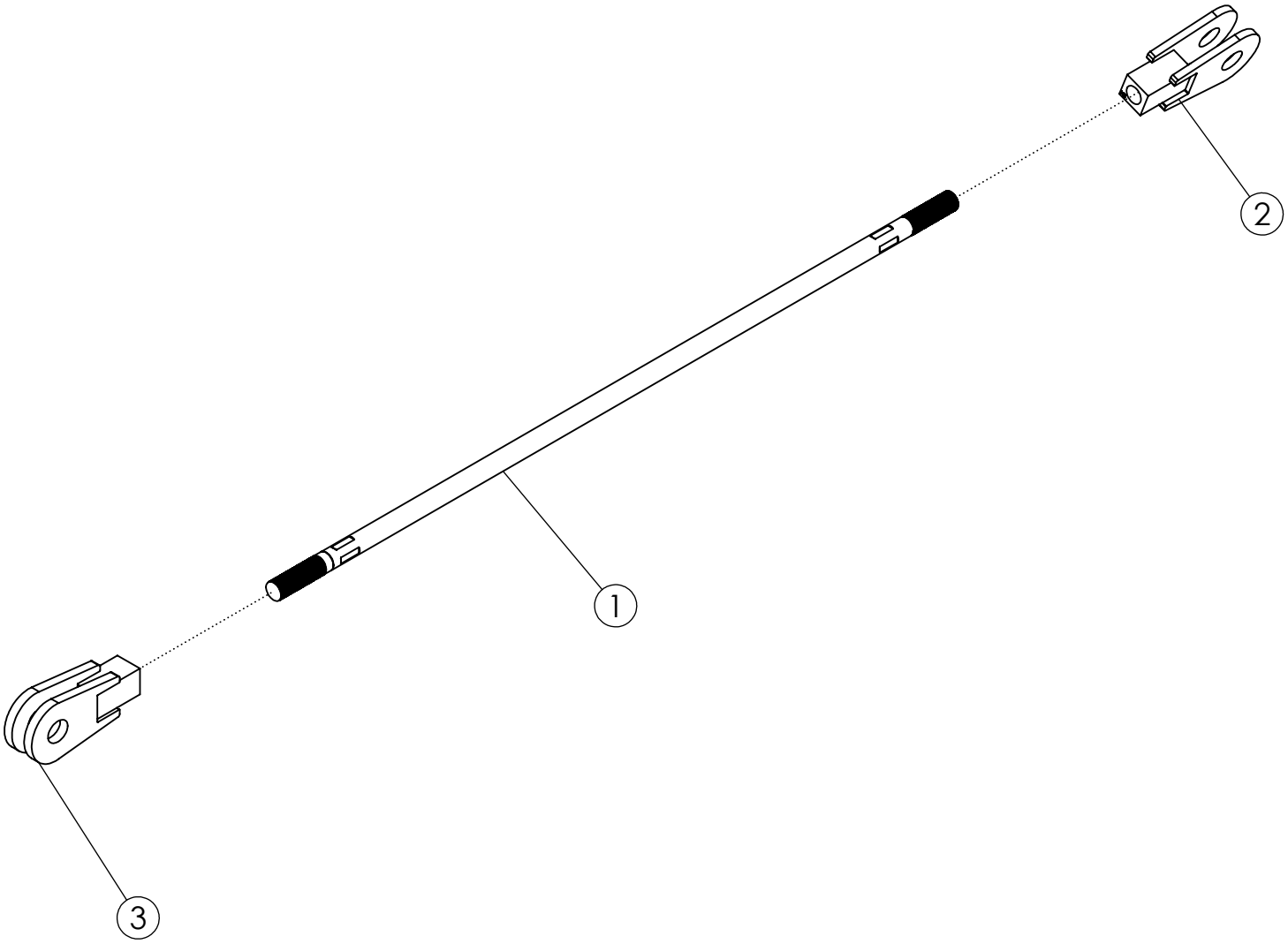
2
1
3

TRUSS ARM SHORT			
ITEM	PART NO.	DESCRIPTION	QTY
1	318948	SHAFT-TRUSS SUPPORT SHORT	1
2	318925	WLDMT-CLEVIS MNT RH THREADED	1
3	318924	WLDMT-CLEVIS MNT LH THREADED	1

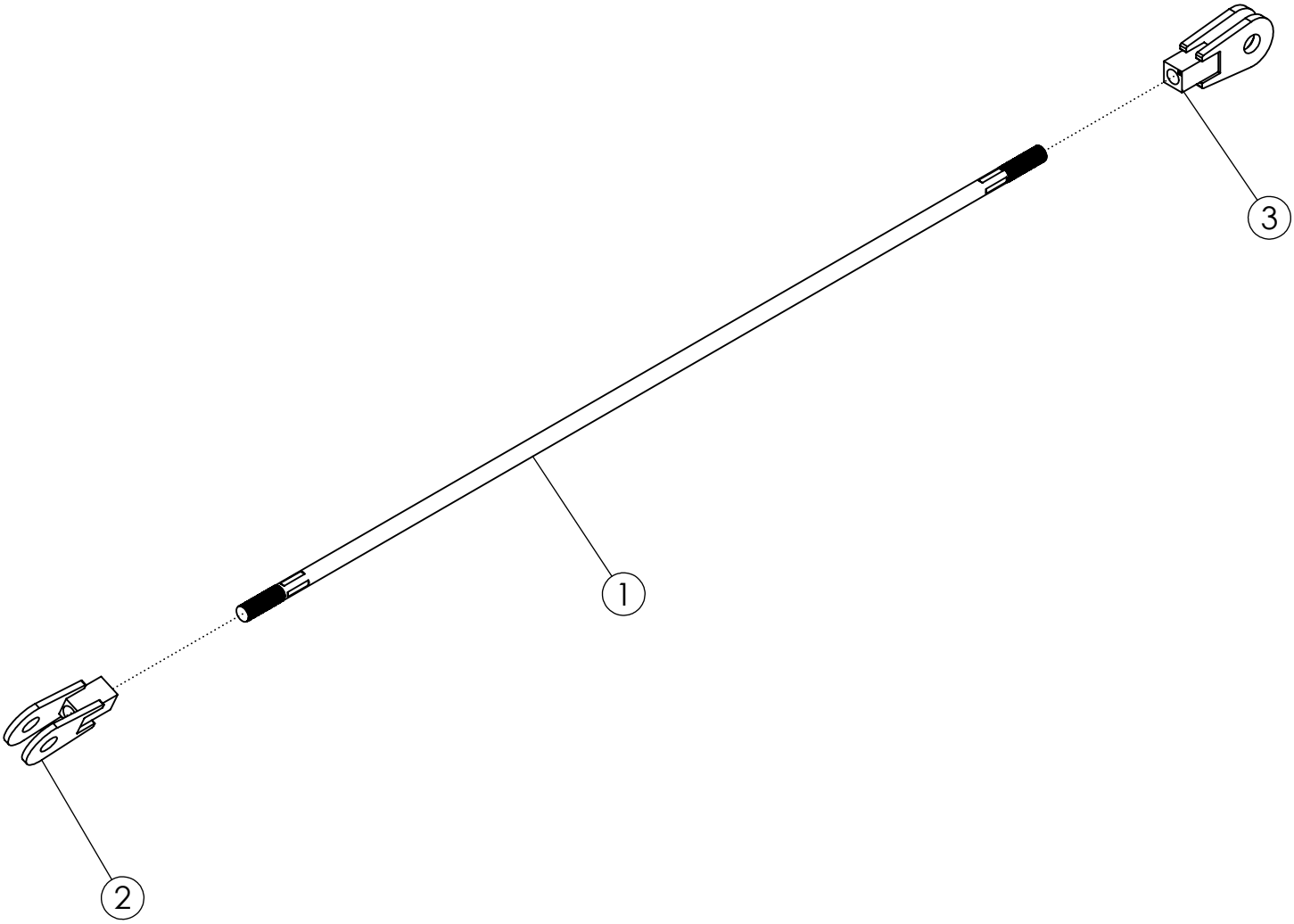
3
1
2

TRUSS ARM LONG			
ITEM	PART NO.	DESCRIPTION	QTY
1	318947	SHAFT-TRUSS SUPPORT LONG	1
2	318925	WLDMT-CLEVIS MNT RH THREADED	1
3	318924	WLDMT-CLEVIS MNT LH THREADED	1

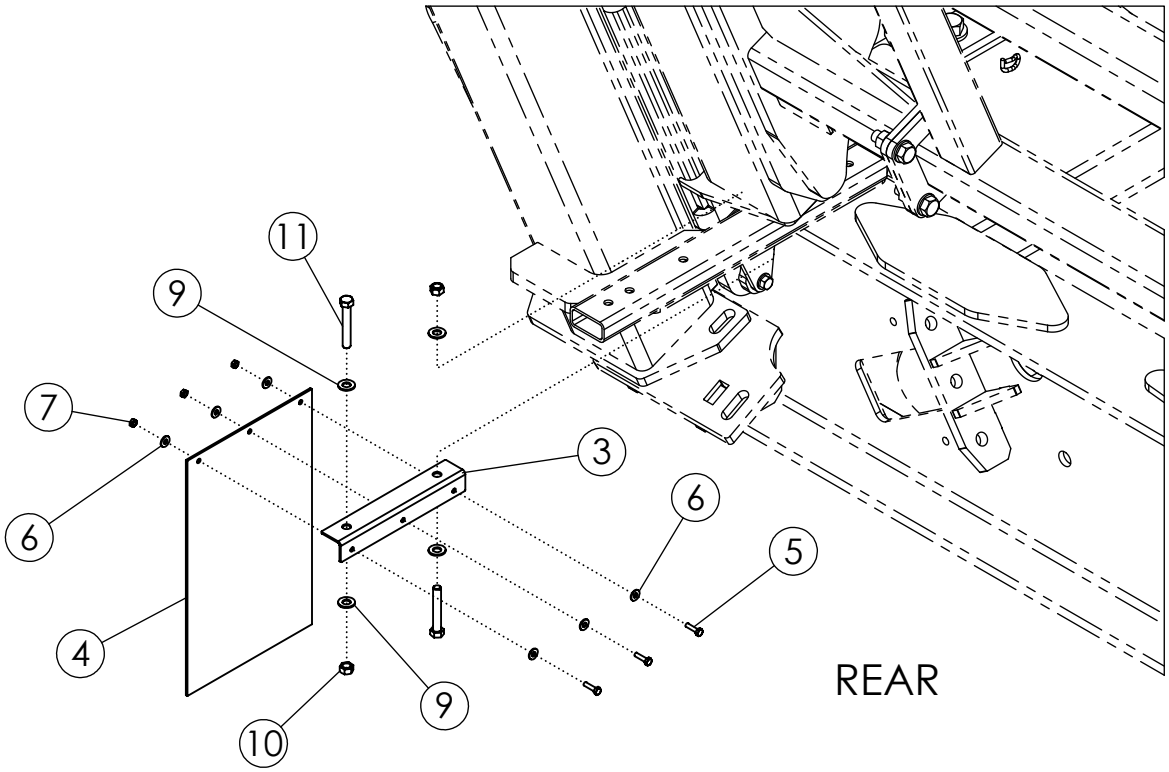
11
9
7
3
6
6
5
4
9
10
REAR

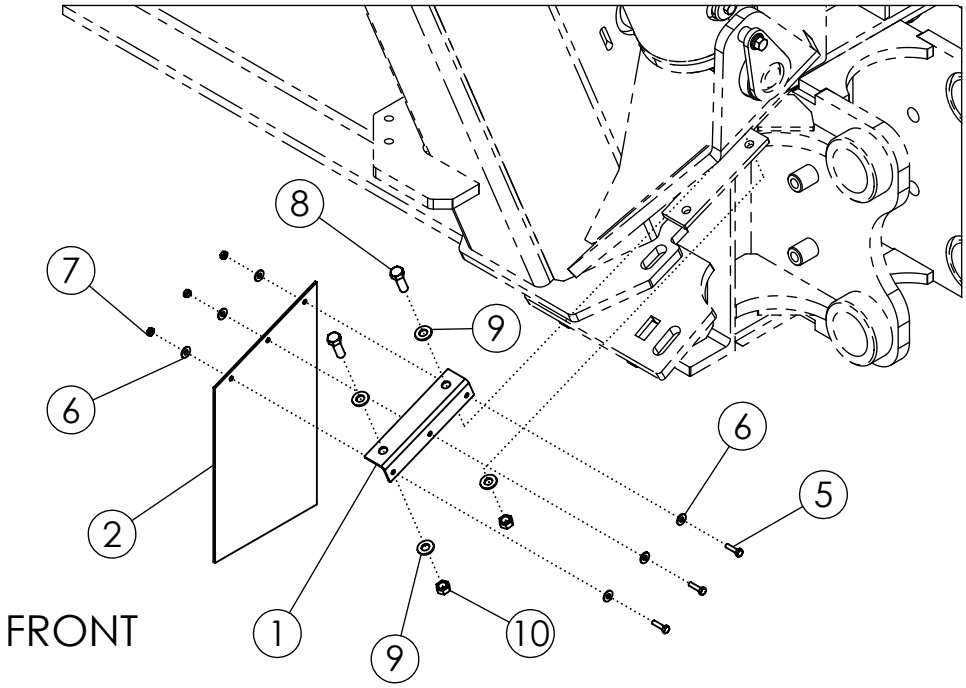
8
7
9
6
6
5
2
FRONT
1
9
10

MUDFLAPS			
ITEM	PART NO.	DESCRIPTION	QTY
1	319032	PLATE-MUDFLAP BRACKET FRONT	1
2	319200	RUBBER-FRONT MUDFLAP	1
3	319033	PLATE-MUDFLAP BRACKET REAR	1
4	319199	RUBBER-REAR MUDFLAP	1
5	1013423	BOLT-HEX: .25 X 1.00 NC GR5 ZP	6
6	1020416	WASHER-FLAT: .25 ZP	12
7	1030946	NUT-TOPLOCK: .25 NC GR5 ZP	6
8	1011607	BOLT-HEX: .50 X 1.50 NC GR5 ZP	2
9	1011584	WASHER-FLAT: SAE .50 ZP	8
10	1027461	NUT-TOPLOCK: .50 NC GR5 ZP	4
11	1017719	BOLT-HEX: .50 X 3.25 NC GR5 ZP	2

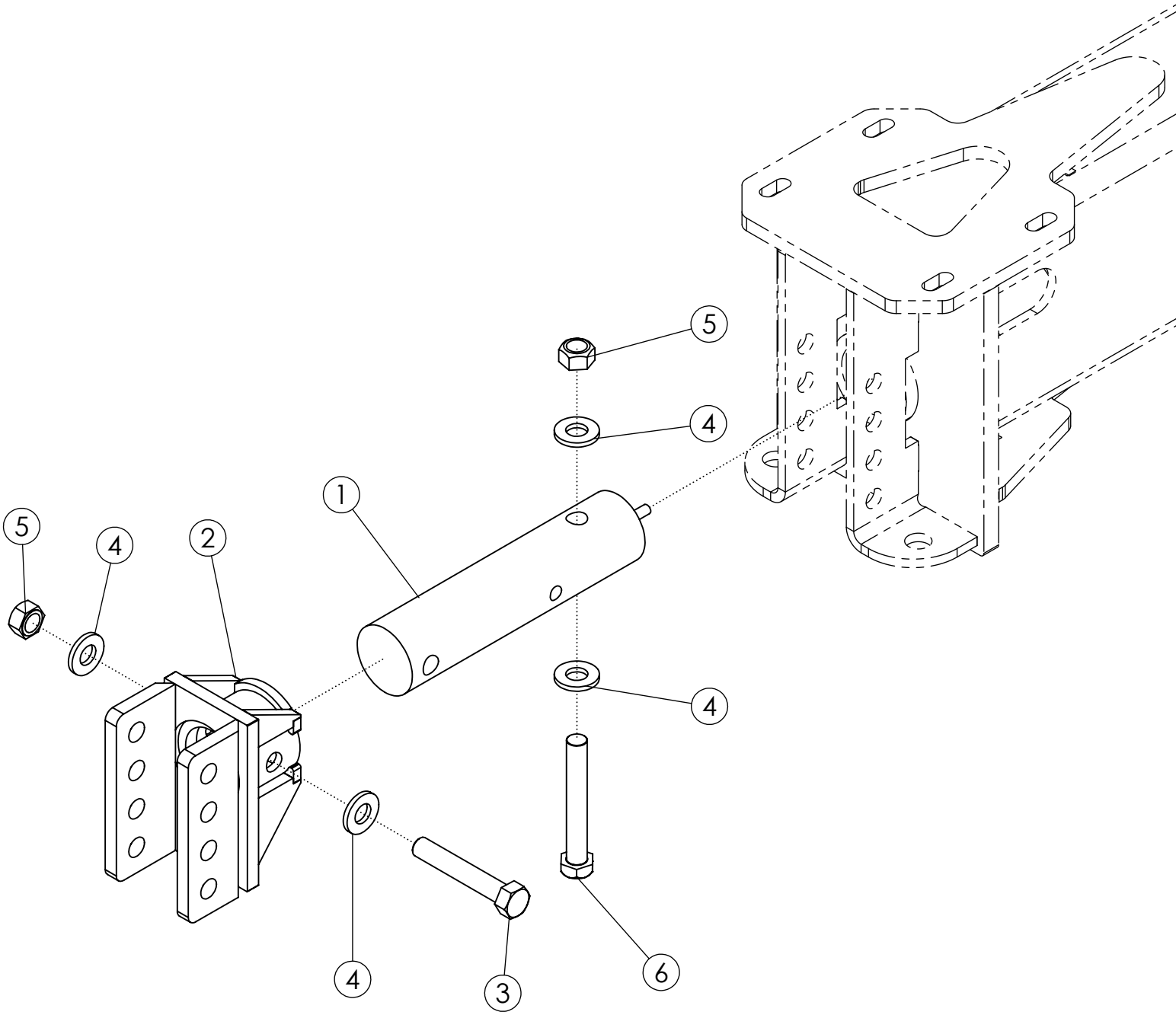
5
4
1
2
5
4
4
4
3
6

SCALE SYSTEM (HITCH)			
ITEM	PART NO.	DESCRIPTION	QTY
1	318036	LOAD CELL-3.75SB-16FT EZ MATE 407694	1
2	310510	WLDMT-WEIGH TRONIX PINTLE	1
3	1032502	BOLT-HEX: 1.00 X 6.00 NC GR8 ZP	1
4	1030728	WASHER-FLAT: SAE 1.00 ZP GR8	4
5	1016969	NUT-TOPLOCK: 1.00 NC GR5 ZP	2
6	1018839	BOLT-HEX: 1.00 X 7.00 NC GR8 ZP	1

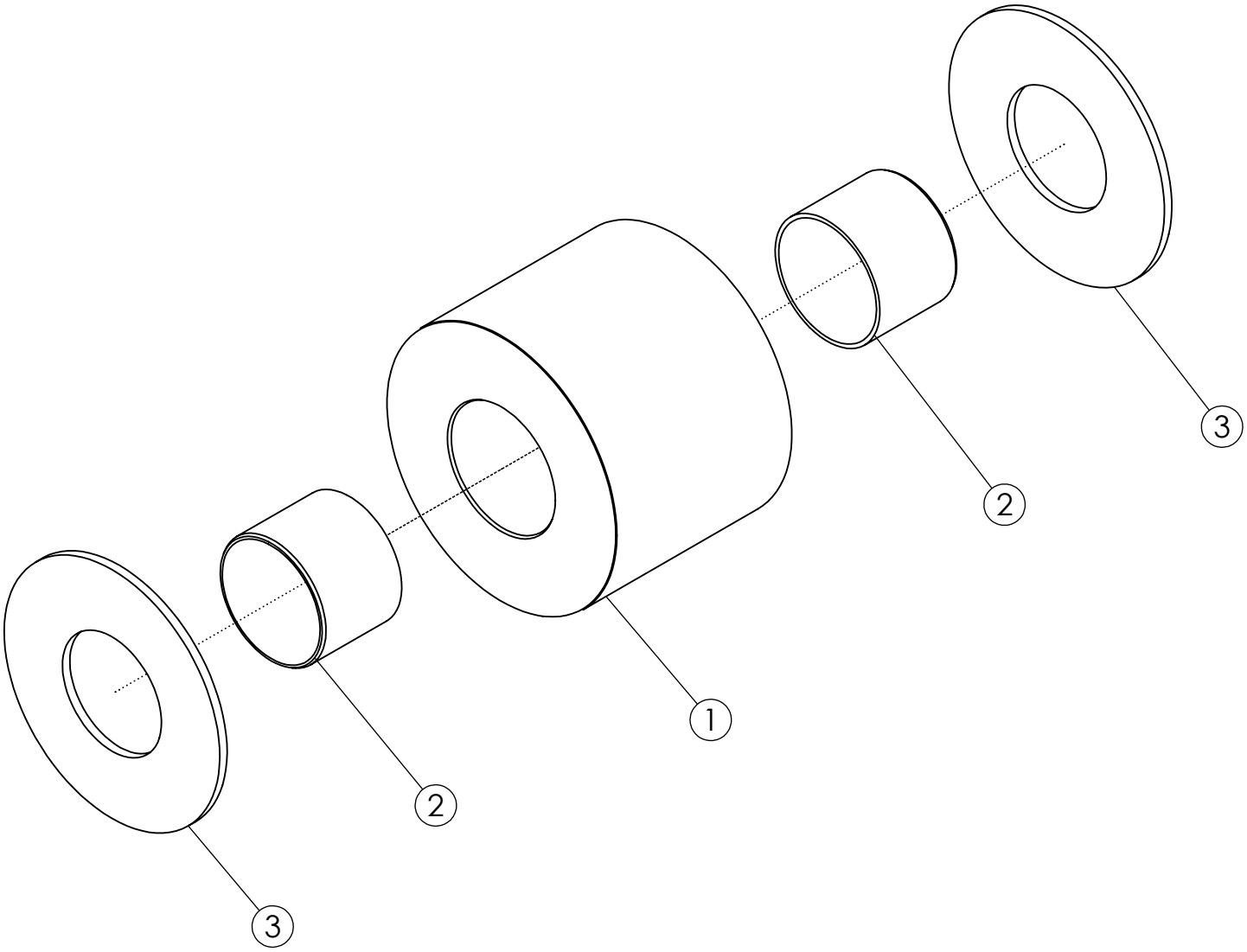
3
2
1
2
3

LADDER FRAME ROLLER			
ITEM	PART NO.	DESCRIPTION	QTY
1	319325	TUBE-LADDER FRAME ROLLER	1
2	318087	BUSHING-IGLIDE Q2 SLEEVE 2.5"IDX2.68"ODX2"L	2
3	319324	WASHER-ROLLER GUARD	2

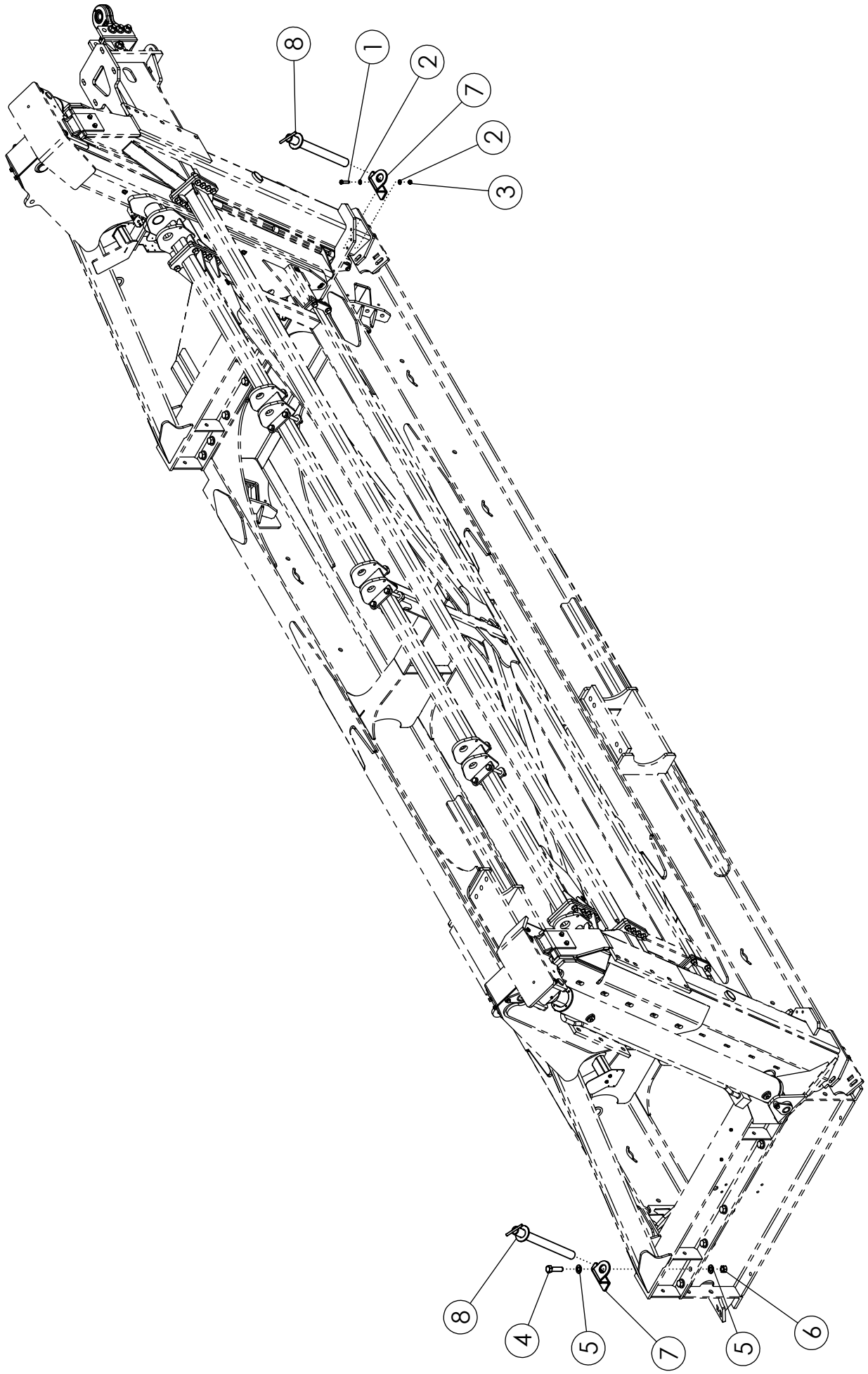
8
1
2
7
2
3
8
4
5
7
5
6

SAFETY PINS			
ITEM	PART NO.	DESCRIPTION	QTY
1	1011609	BOLT-HEX: .50 X 2.00 NC GR5 ZP	1
2	1011584	WASHER-FLAT: SAE .50 ZP	2
3	1027461	NUT-TOPLOCK: .50 NC GR5 ZP	1
4	1011626	BOLT-HEX: 1.00 X 3.50 NC GR5 ZP	1
5	1016663	WASHER-FLAT: SAE 1.00 ZP	2
6	1016969	NUT-TOPLOCK: 1.00 NC GR5 ZP	1
7	319204	PLATE-SAFETY PIN MOUNT	2
8	319010	WLDMT-LADDER FRAME SAFETY PIN 23.125"	2

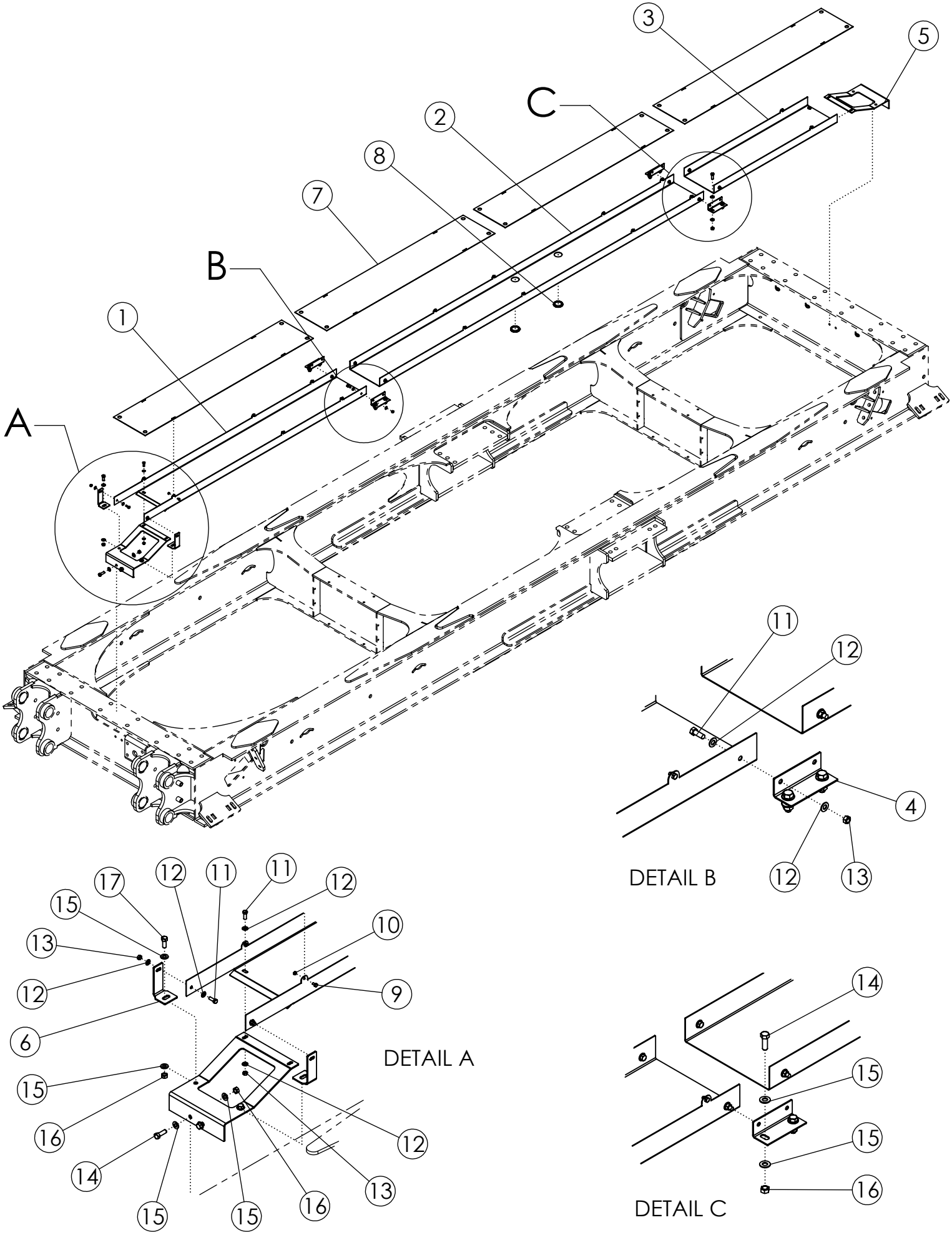
A
B
C
1
2
3
4
5
6
7
8
9
10
11
12
13
14
15
16
17
DETAIL A
DETAIL B
DETAIL C

HOSE TRAY			
ITEM	PART NO.	DESCRIPTION	QTY
1	319211	PLATE-FRONT HOSE TRAY	1
2	319212	PLATE-MIDDLE HOSE TRAY	1
3	319213	PLATE-BACK HOSE TRAY	1
4	319215	PLATE-HOSE TRAY MIDDLE MOUNT	4
5	319206	PLATE-HOSE TRAY END MOUNT	2
6	319216	PLATE-FRONT HOSE TRAY BRACKET	2
7	319214	PLATE-HOSE TRAY COVER	4
8	319202	GROMMET-RUBBER VARIABLE ID	2
9	1013243	BOLT-HEX: .25 X .50 NC GR5 ZP	16
10	1030946	NUT-TOPLOCK: .25 NC GR5 ZP	16
11	1011600	BOLT-HEX: .38 X 1.00 NC GR5 ZP	14
12	1014608	WASHER-FLAT: SAE .38 ZP	28
13	1016999	NUT-TOPLOCK: .38 NC GR5 ZP	14
14	1011607	BOLT-HEX: .50 X 1.50 NC GR5 ZP	12
15	1011584	WASHER-FLAT: SAE .50 ZP	28
16	1027461	NUT-TOPLOCK: .50 NC GR5 ZP	14
17	1011606	BOLT-HEX: .50 X 1.25 NC GR5 ZP	2

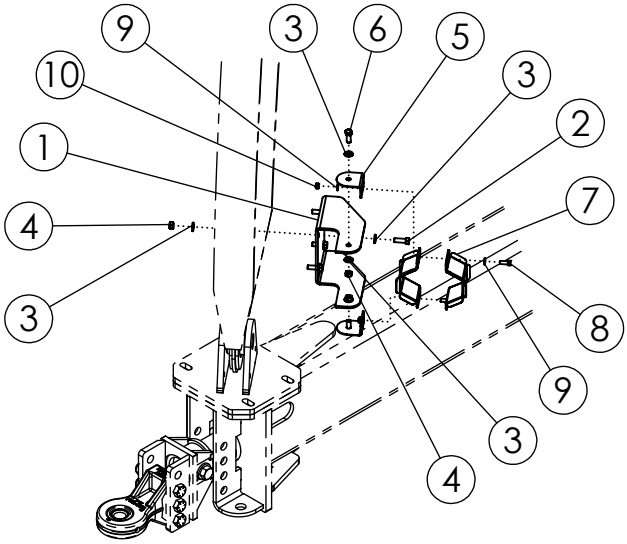

DETAIL A

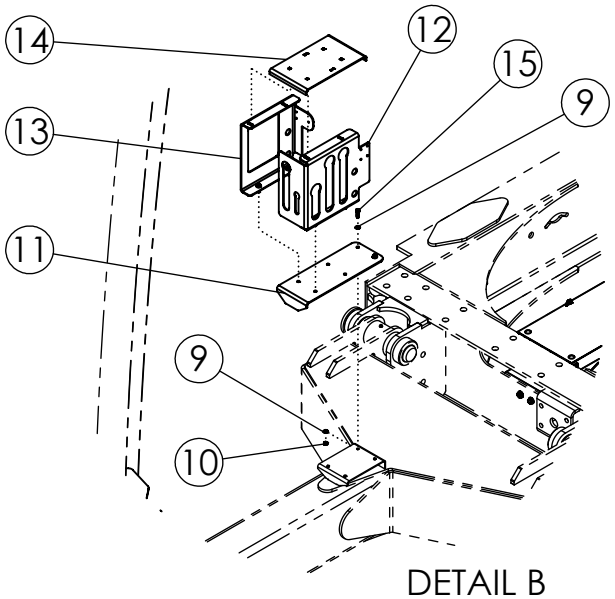

DETAIL B

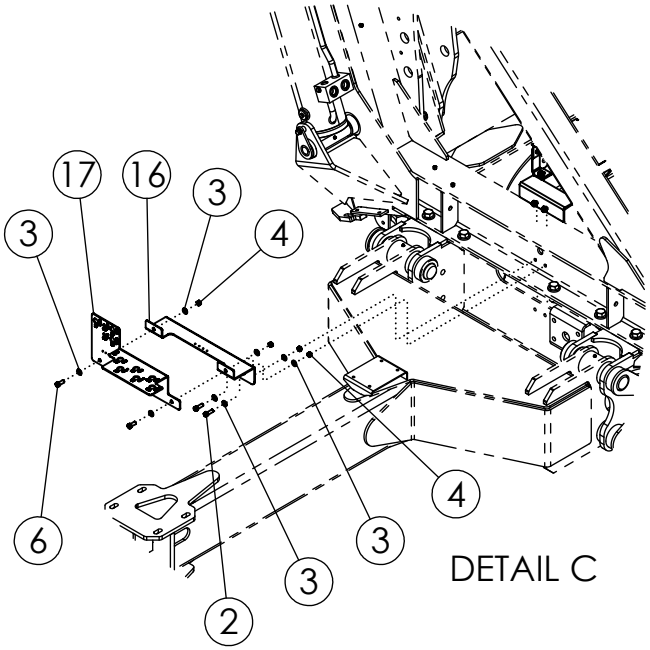

DETAIL C

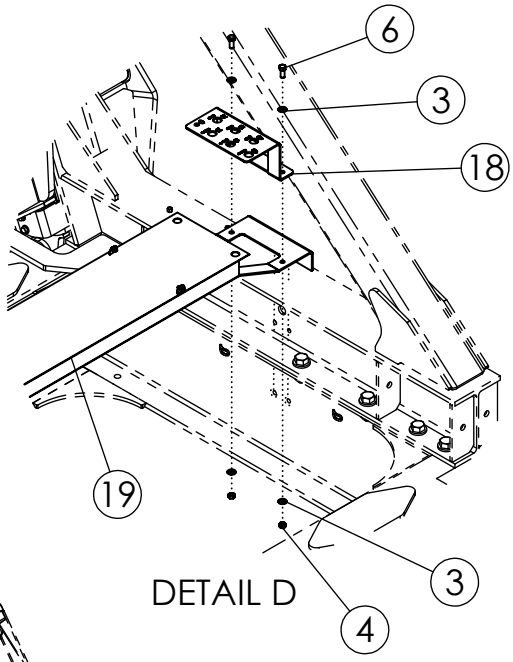

DETAIL D

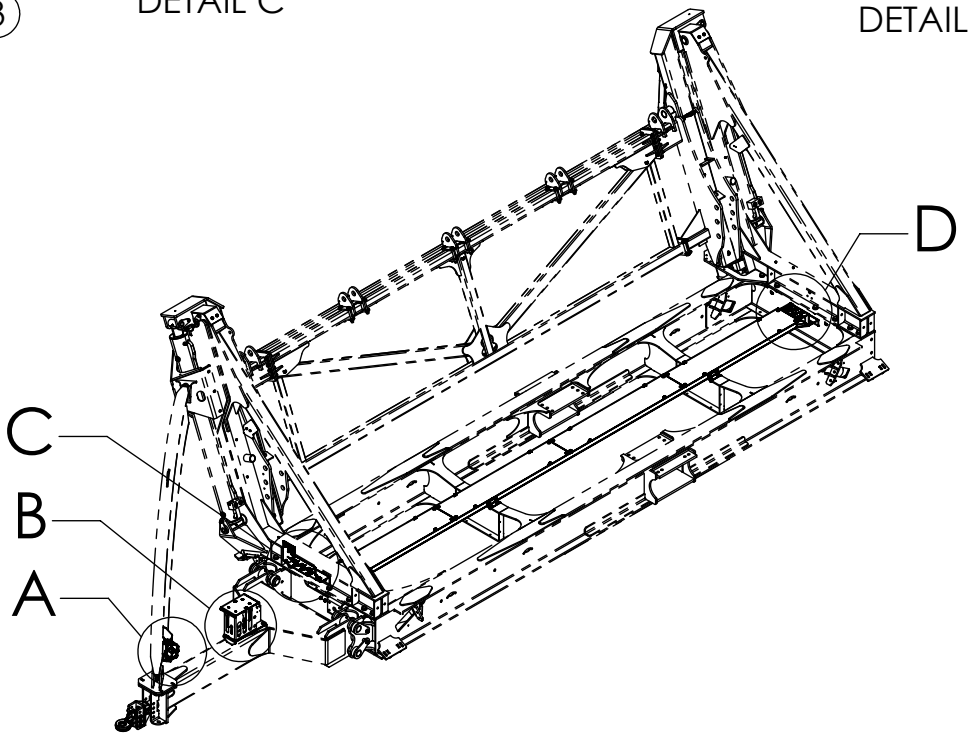

HYDRAULIC MOUNTING			
ITEM	PART NO.	DESCRIPTION	QTY
1	319178	PLATE-HOSE CLAMP MOUNT	1
2	1011607	BOLT-HEX: .50 X 1.50 NC GR5 ZP	6
3	1011584	WASHER-FLAT: SAE .50 ZP	24
4	1027461	NUT-TOPLOCK: .50 NC GR5 ZP	12
5	319177	PLATE-HOSE CLAMP BRACKET	2
6	1011606	BOLT-HEX: .50 X 1.25 NC GR5 ZP	6
7	319176	PLATE-HYDRAULIC HOSE CLAMP	2
8	1011600	BOLT-HEX: .38 X 1.00 NC GR5 ZP	2
9	1014608	WASHER-FLAT: SAE .38 ZP	16
10	1016999	NUT-TOPLOCK: .38 NC GR5 ZP	8
11	319344	PLATE-HOSE HOLDER BASE	1
12	319342	PLATE-HOSE HOLDER HANDLE	1
13	319343	PLATE-HOSE HOLDER JUNCTION	1
14	318711	PLATE-HOSE CLAMP BLK	1
15	1011601	BOLT-HEX: .38 X 1.25 NC GR5 ZP	6
16	319186	PLATE-BULKHEAD FRAME MOUNT	1
17	319187	PLATE-FRAME BULKHEAD FRONT	1
18	319188	PLATE-FRAME BULKHEAD REAR	1
19	319205	ASSY-HYD HOSE TRAY	1

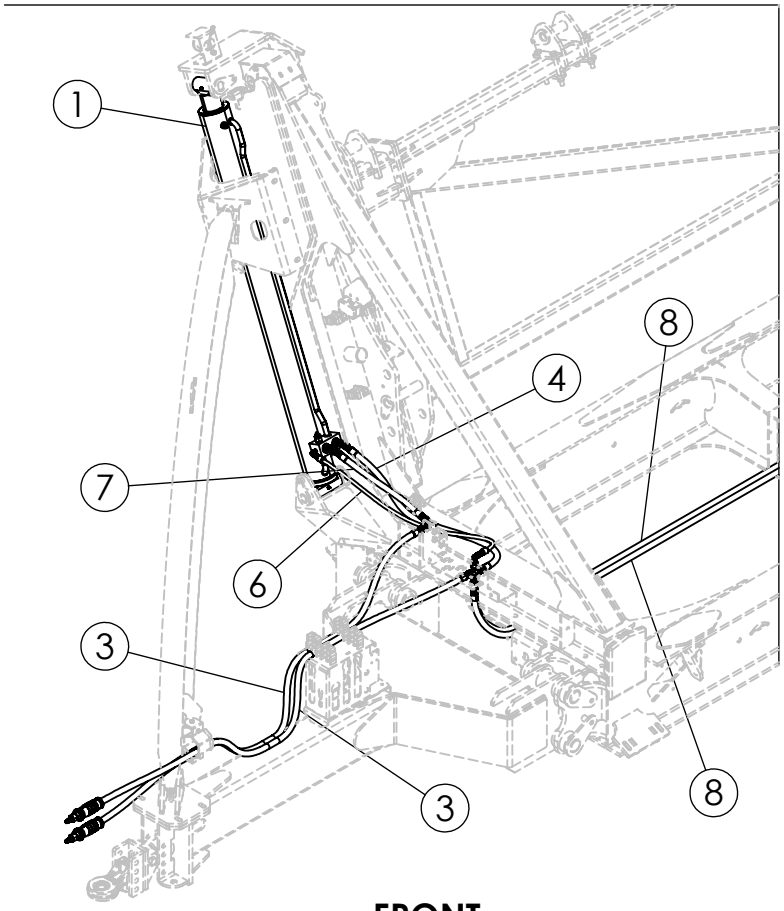

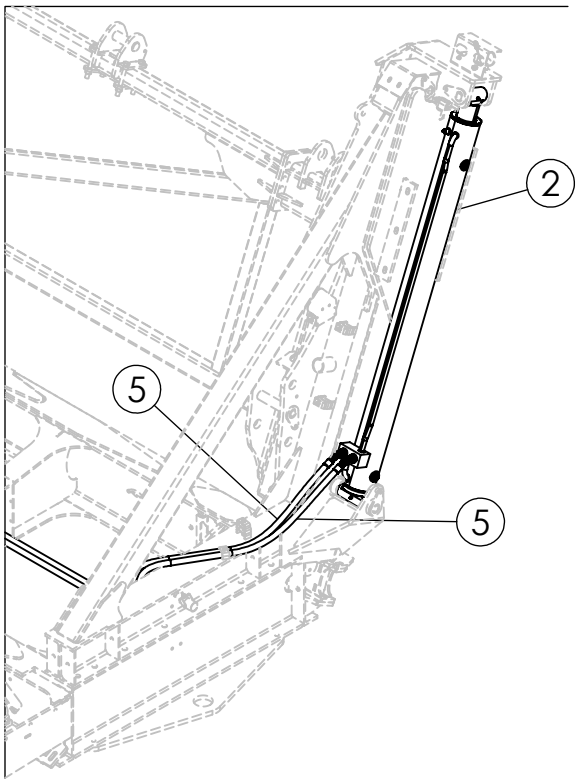

FRONT

REAR

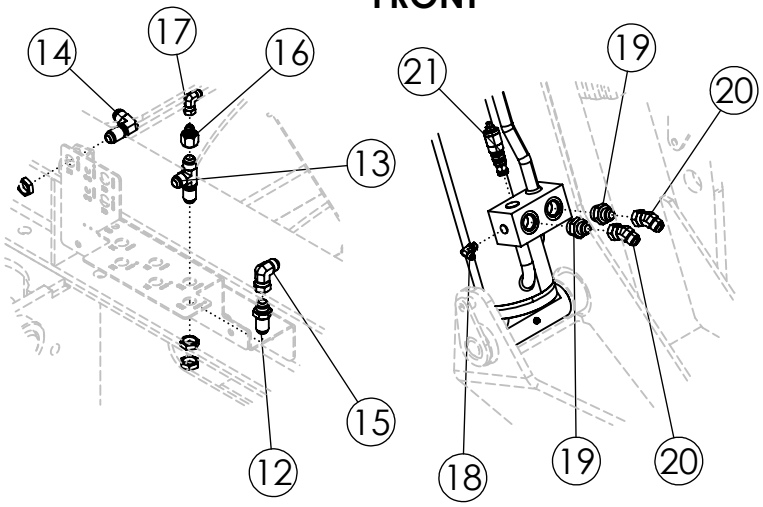

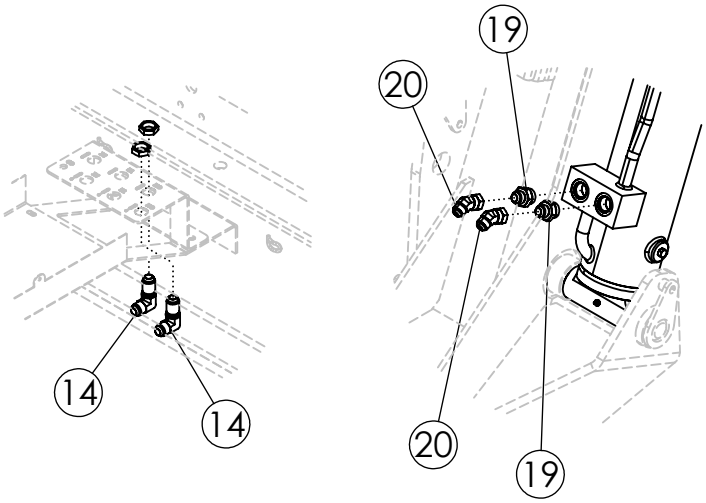

TO TRACTOR

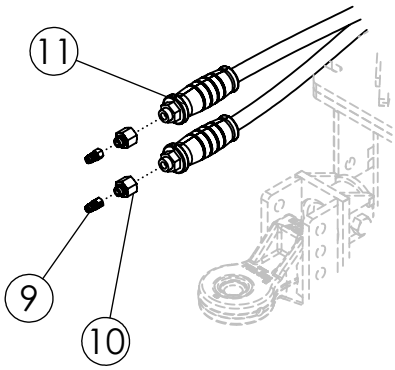

LIFT CYLINDER HYDRAULICS

ITEM	PART NO.	DESCRIPTION	QTY
1	318001	CYL-HYDRAULIC 7.00 X 72 REPHASE	1
2	318002	CYL-HYDRAULIC 5.75 X 72 REPHASE	1
3	318815	HOSE: .75 X 180 12MB-12FJX	2
4	318816	HOSE: .75 X 060 12FJX-12FJX	1
5	318817	HOSE: .75 X 061 12FJX-12FJX	2
6	318818	HOSE: .38 X 056 6FJX-8FJX	1
7	318836	HOSE: .75 X 026 12FJX-12FJX	1
8	318834	HOSE: .75 X 296 12FJX-12FJX	2
9	36290	PIONEER TIP 8010-15P (#8 ORB)	2
10	319333	FTG-ADAPTER: 8MB-12FB	2
11	301923	HYD LABEL: .75 GREEN/GRAY SET	1
12	332918	FTG-BULKHEAD: 12MJ-12MJ	1
13	319336	FTG-BULKHEAD: 12MJ-12MJ-12MJ	1
14	319337	FTG-BULKHEAD: 12MJ-12MJ-90	3
15	59041	FTG-ELBOW: 12MJ-12FJX-90	1
16	66943	FTG-ADAPTER: 12FJ-8MJ	1
17	57668	FTG-ELBOW: 8MJ-8FJX-90	1
18	57754	FTG-ELBOW: 6MB-6MJ-90	1
19	58982	FTG-ADAPTER: 16MB-12MJ	4
20	62014	FTG-ELBOW: 12MJ-12FJX-45	4
21	316031	COUNTERBALANCE VALVE CARTRIDGE-4:1 3045PSI	1

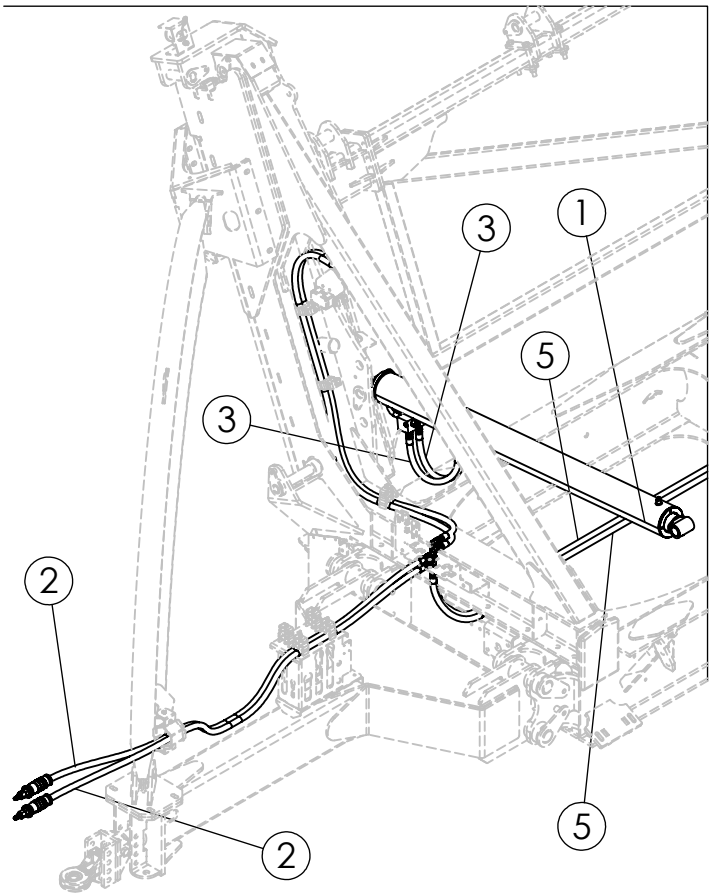

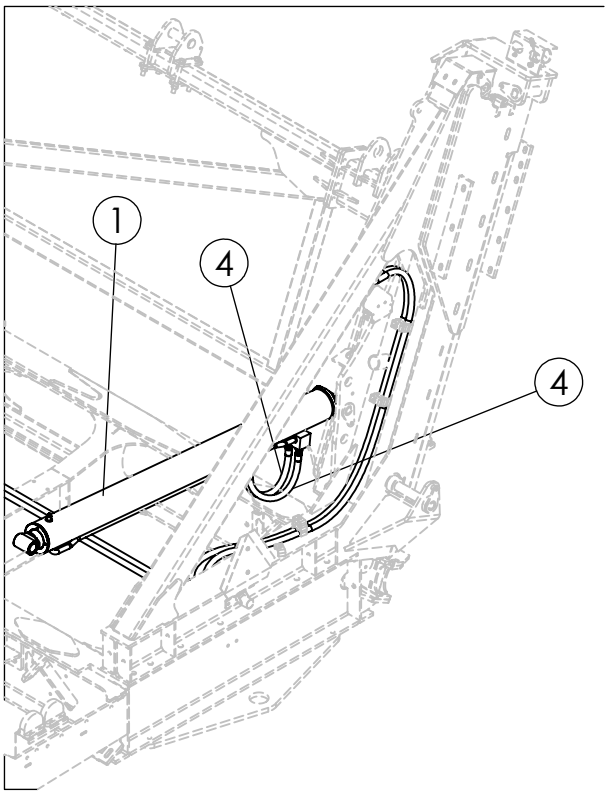

FRONT

REAR

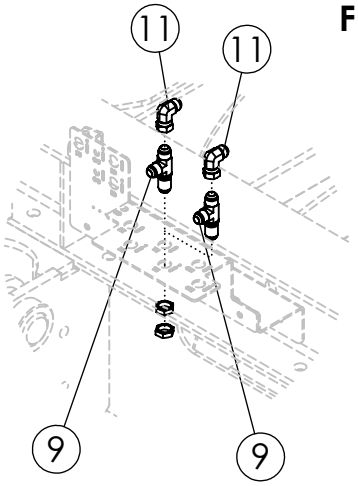

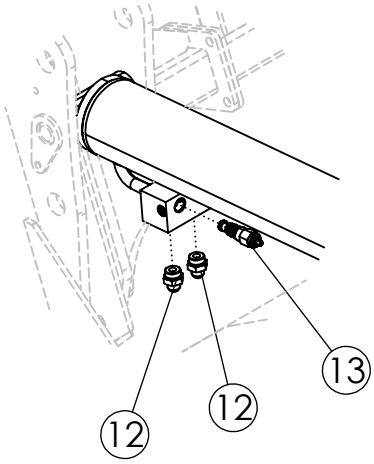

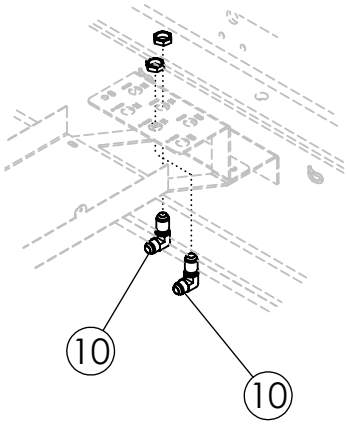

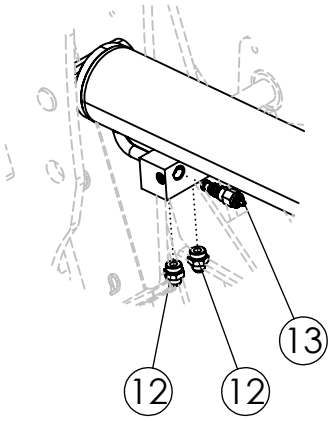

TO TRACTOR

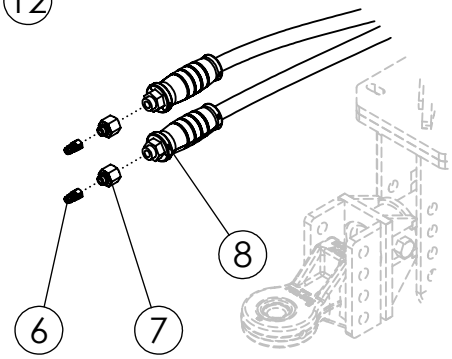

TILT CYLINDER HYDRAULICS			
ITEM	PART NO.	DESCRIPTION	QTY
1	318003	CYL-HYDRAULIC 6.00 X 72	2
2	318815	HOSE: .75 X 180 12MB-12FJX	2
3	318819	HOSE: .75 X 180 12FJX-12FJX	2
4	318820	HOSE: .75 X 204 12FJX-12FJX	2
5	318834	HOSE: .75 X 296 12FJX-12FJX	2
6	36290	PIONEER TIP 8010-15P (#8 ORB)	2
7	319333	FTG-ADAPTER: 8MB-12FB	2
8	301928	HYD LABEL: .75 YELLOW/GRAY SET	1
9	319336	FTG-BULKHEAD: 12MJ-12MJ-12MJ	2
10	319337	FTG-BULKHEAD: 12MJ-12MJ-90	2
11	59041	FTG-ELBOW: 12MJ-12FJX-90	2
12	58982	FTG-ADAPTER: 16MB-12MJ	4
13	316031	COUNTERBALANCE VALVE CARTRIDGE-4:1 3045PSI	2

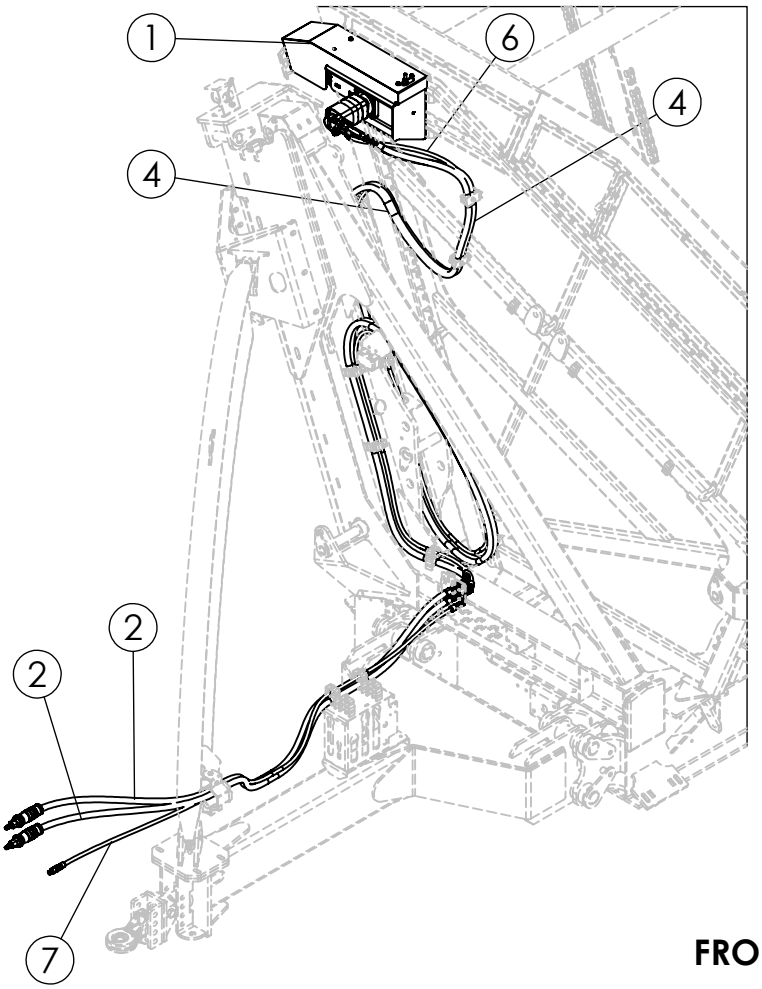

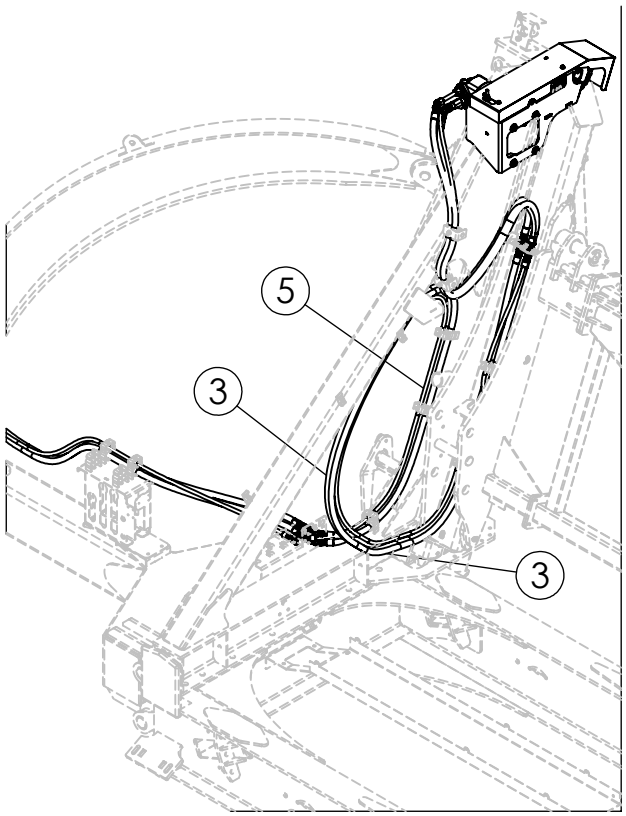

FRONT

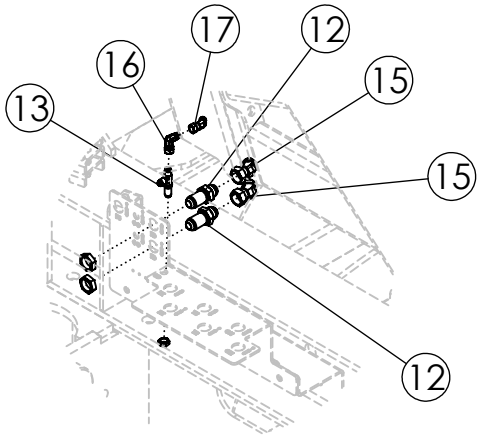

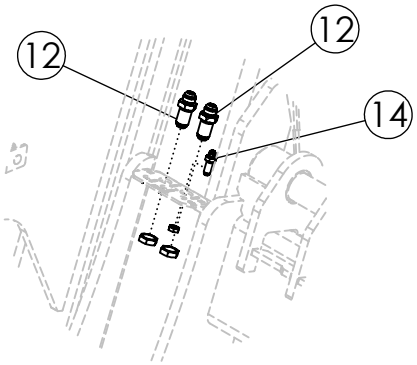

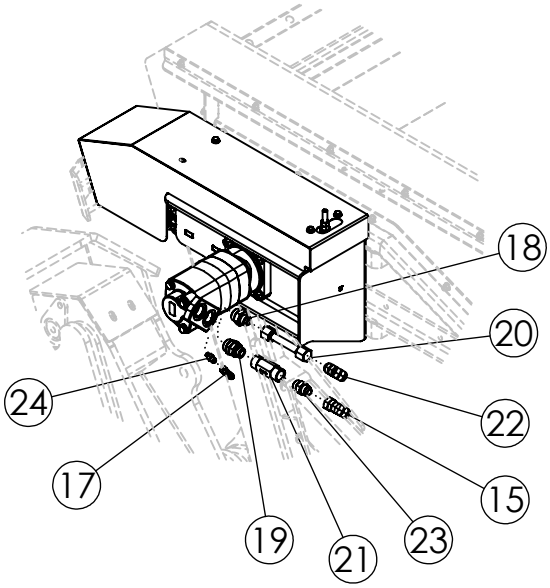

TO TRACTOR

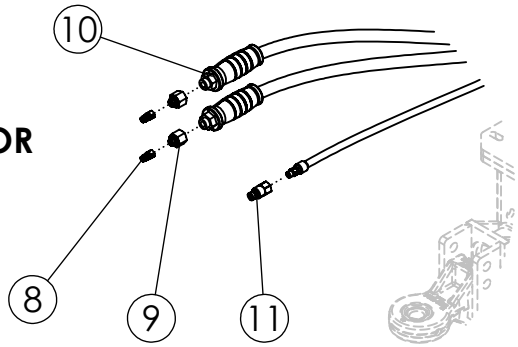

FRONT MOTOR HYDRAULICS

ITEM	PART NO.	DESCRIPTION	QTY
1	319054	ASSY-FLOOR CHAIN MOTORS	1
2	318815	HOSE: .75 X 180 12MB-12FJX	2
3	318821	HOSE: .75 X 224 12FJX-12FJX	2
4	318822	HOSE: .75 X 106 12FJX-12FJX	2
5	318823	HOSE: .38 X 220 6FJX-6FJX	1
6	318824	HOSE: .38 X 112 6FJX-6FJX	1
7	318837	HOSE: .38 X 190 8MB-6FJX	1
8	36290	PIONEER TIP 8010-15P (#8 ORB)	2
9	319333	FTG-ADAPTER: 8MB-12FB	2
10	302303	HYD LABEL: .75 RED/GRAY SET	1
11	69119	FTG-CASE DRAIN 3/8 FLAT FACE (NON-SPILL)	1
12	332918	FTG-BULKHEAD: 12MJ-12MJ	4
13	319335	FTG-BULKHEAD: 6MJ-6MJ-6MJ	1
14	319339	FTG-BULKHEAD: 6MJ-6MJ	1
15	62014	FTG-ELBOW: 12MJ-12FJX-45	3
16	57897	FTG-ELBOW: 6MJ-6FJX-90	1
17	301538	FTG-ELBOW: 6MJ-6FJX-45	2
18	58982	FTG-ADAPTER: 16MB-12MJ	1
19	319089	FTG-ADAPTER: 16MB-12MB	1
20	63471	ASSY-TUBE LINE .75 X 5.25 0-0	1
21	319088	VALVE-CHECK: 12FB-12FB	1
22	319334	FTG-ELBOW: 12MJ-12MJ-45	1
23	65918	FTG-ADAPTER: 12MB-12MJ	1
24	300245	FTG-ADAPTER: 4MB-6MJ	1

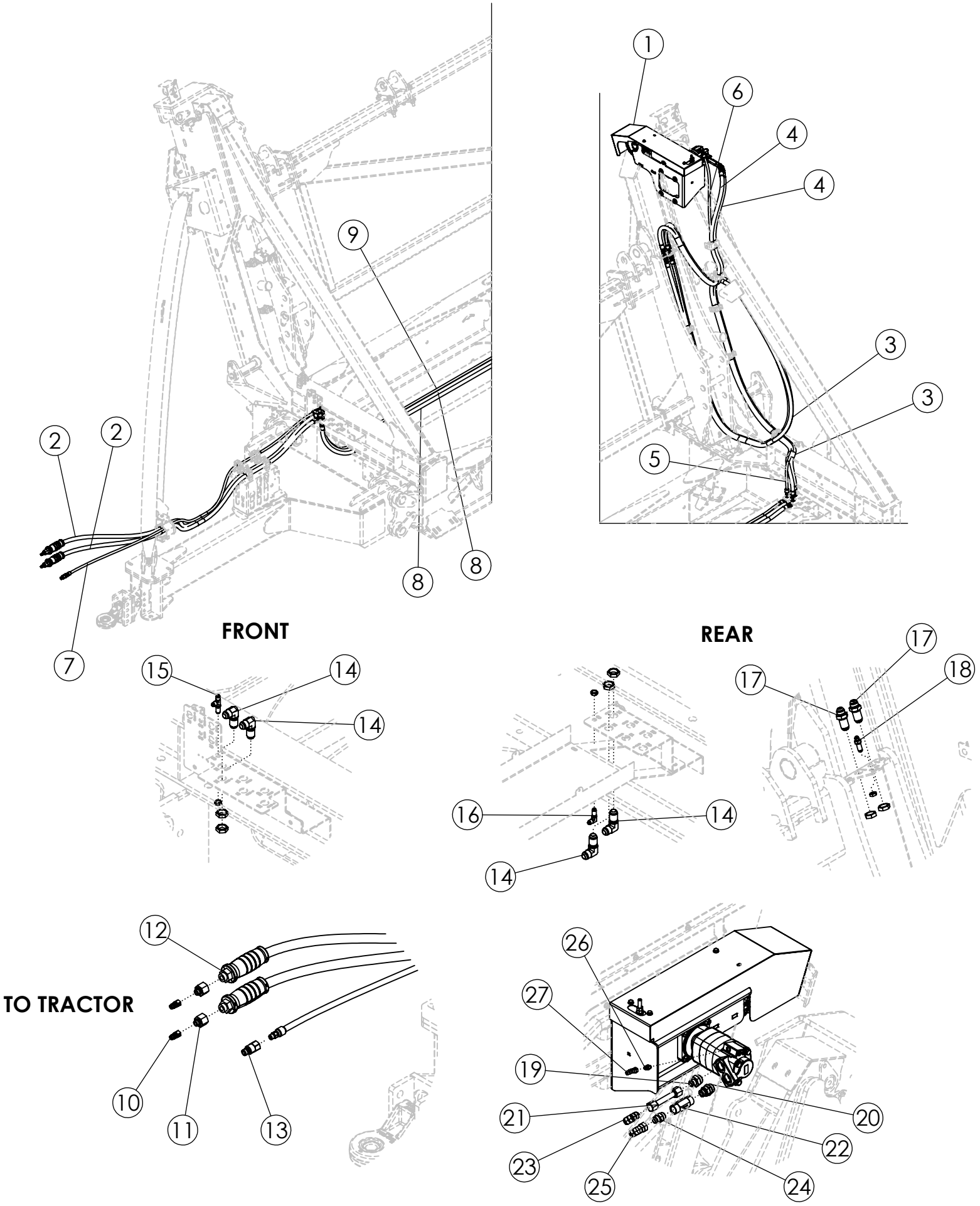
1
6
4
4
9
3
3
2
2
5
8
8
7
FRONT
REAR
15
14
14
17
17
18
16
14
14
12
TO TRACTOR
26
27
19
10
11
13
21
20
22
23
25
24

REAR MOTOR HYDRAULICS

ITEM	PART NO.	DESCRIPTION	QTY
1	319054	ASSY-FLOOR CHAIN MOTORS	1
2	318815	HOSE: .75 X 180 12MB-12FJX	2
3	318825	HOSE: .75 X 242 12FJX-12FJX	2
4	318822	HOSE: .75 X 106 12FJX-12FJX	2
5	318826	HOSE: .38 X 234 6FJX-6FJX	1
6	318824	HOSE: .38 X 112 6FJX-6FJX	1
7	318837	HOSE: .38 X 190 8MB-6FJX	1
8	318834	HOSE: .75 X 296 12FJX-12FJX	2
9	318835	HOSE: .38 X 296 6FJX-6FJX	1
10	36290	PIONEER TIP 8010-15P (#8 ORB)	2
11	319333	FTG-ADAPTER: 8MB-12FB	2
12	303764	HYD LABEL: .75 BLACK/GRAY SET	1
13	69119	FTG-CASE DRAIN 3/8 FLAT FACE (NON-SPILL)	1
14	319337	FTG-BULKHEAD: 12MJ-12MJ-90	4
15	319335	FTG-BULKHEAD: 6MJ-6MJ-6MJ	1
16	319338	FTG-BULKHEAD: 6MJ-6MJ-90	1
17	332918	FTG-BULKHEAD: 12MJ-12MJ	2
18	319339	FTG-BULKHEAD: 6MJ-6MJ	1
19	58982	FTG-ADAPTER: 16MB-12MJ	1
20	319089	FTG-ADAPTER: 16MB-12MB	1
21	63471	ASSY-TUBE LINE .75 X 5.25 0-0	1
22	319088	VALVE-CHECK: 12FB-12FB	1
23	319334	FTG-ELBOW: 12MJ-12MJ-45	1
24	65918	FTG-ADAPTER: 12MB-12MJ	1
25	62014	FTG-ELBOW: 12MJ-12FJX-45	1
26	300245	FTG-ADAPTER: 4MB-6MJ	1
27	301538	FTG-ELBOW: 6MJ-6FJX-45	1

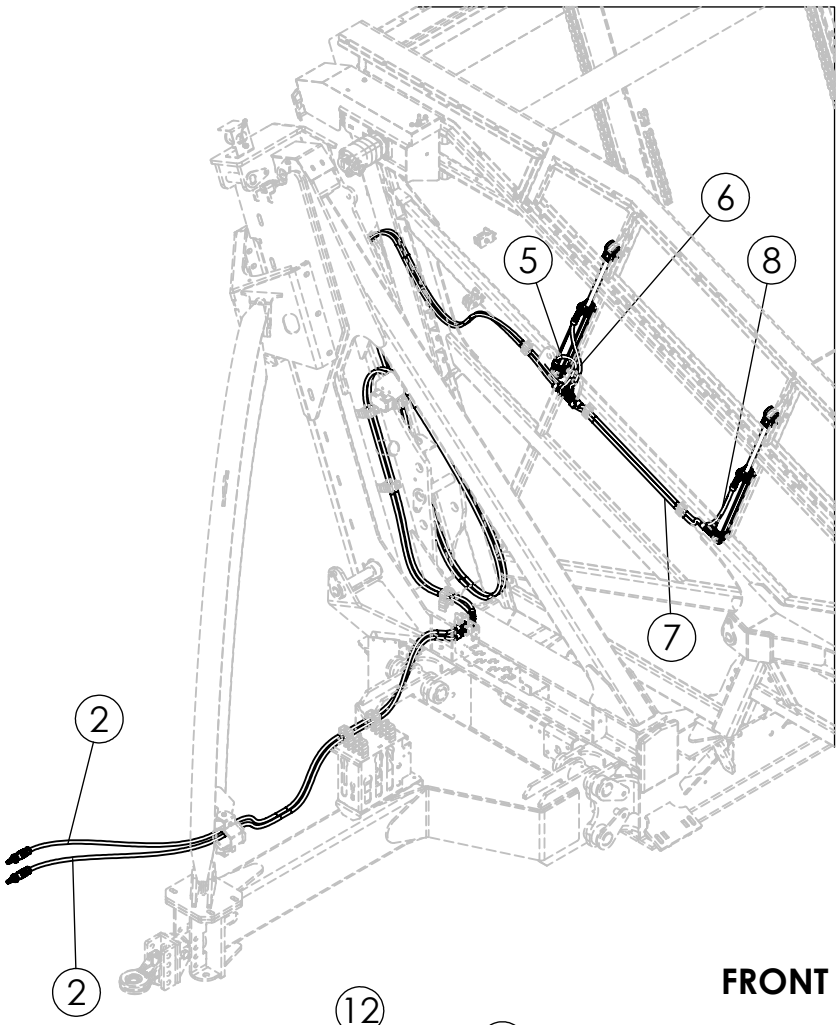

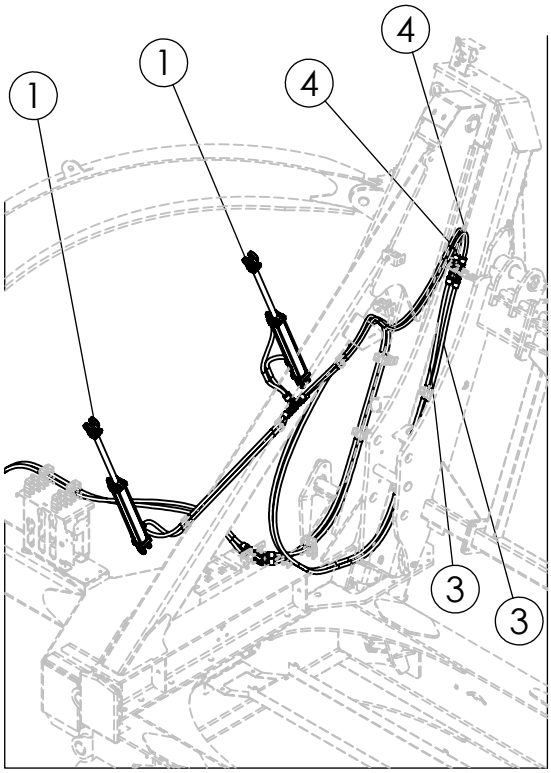

FRONT

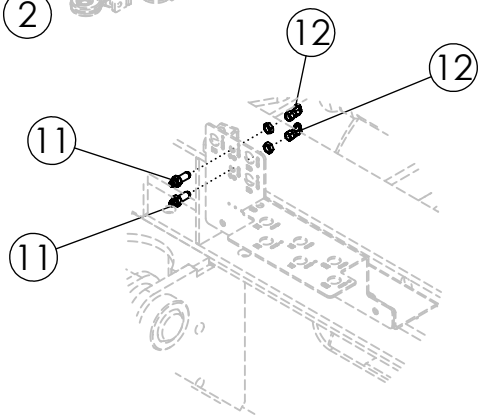

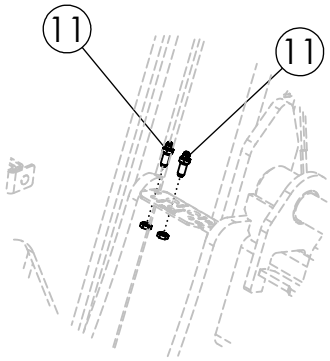

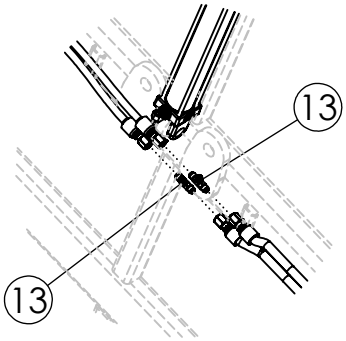

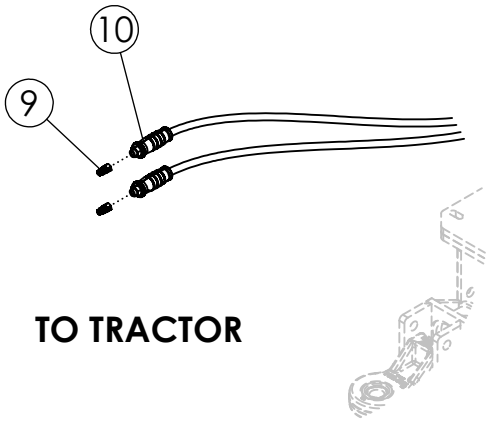

TO TRACTOR

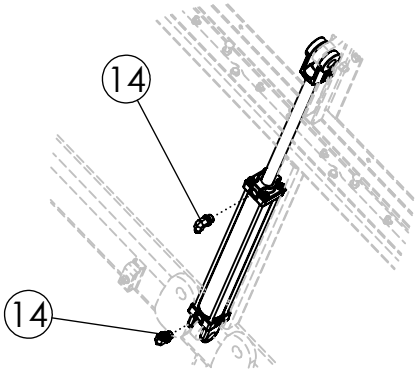

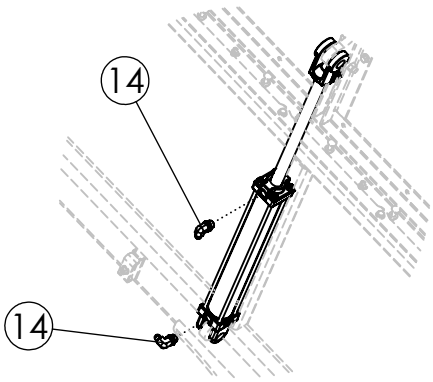

TANK DOOR HYDRAULICS			
ITEM	PART NO.	DESCRIPTION	QTY
1	318892	CYLINDER-HYD 2 X 16 (TIE-ROD)	2
2	318827	HOSE: .38 X 180 8MB-6FJX	2
3	318828	HOSE: .38 X 217 6FJX-6FJX	2
4	318829	HOSE: .38 X 080 6FJX-6FJX	2
5	318830	HOSE: .38 X 020 6FJX-6FJX	1
6	318831	HOSE: .38 X 028 6FJX-6FJX	1
7	318832	HOSE: .38 X 056 6FJX-6FJX	1
8	318833	HOSE: .38 X 071 6FJX-6FJX	1
9	36290	PIONEER TIP 8010-15P (#8 ORB)	2
10	301920	HYD LABEL: .50 ORANGE/GRAY SET	1
11	319339	FTG-BULKHEAD: 6MJ-6MJ	4
12	301538	FTG-ELBOW: 6MJ-6FJX-45	2
13	63890	FTG-TEE: 6MJ-6MJ-6MJ	2
14	58557	FTG-ELBOW: 8MB-6MJ-90	4

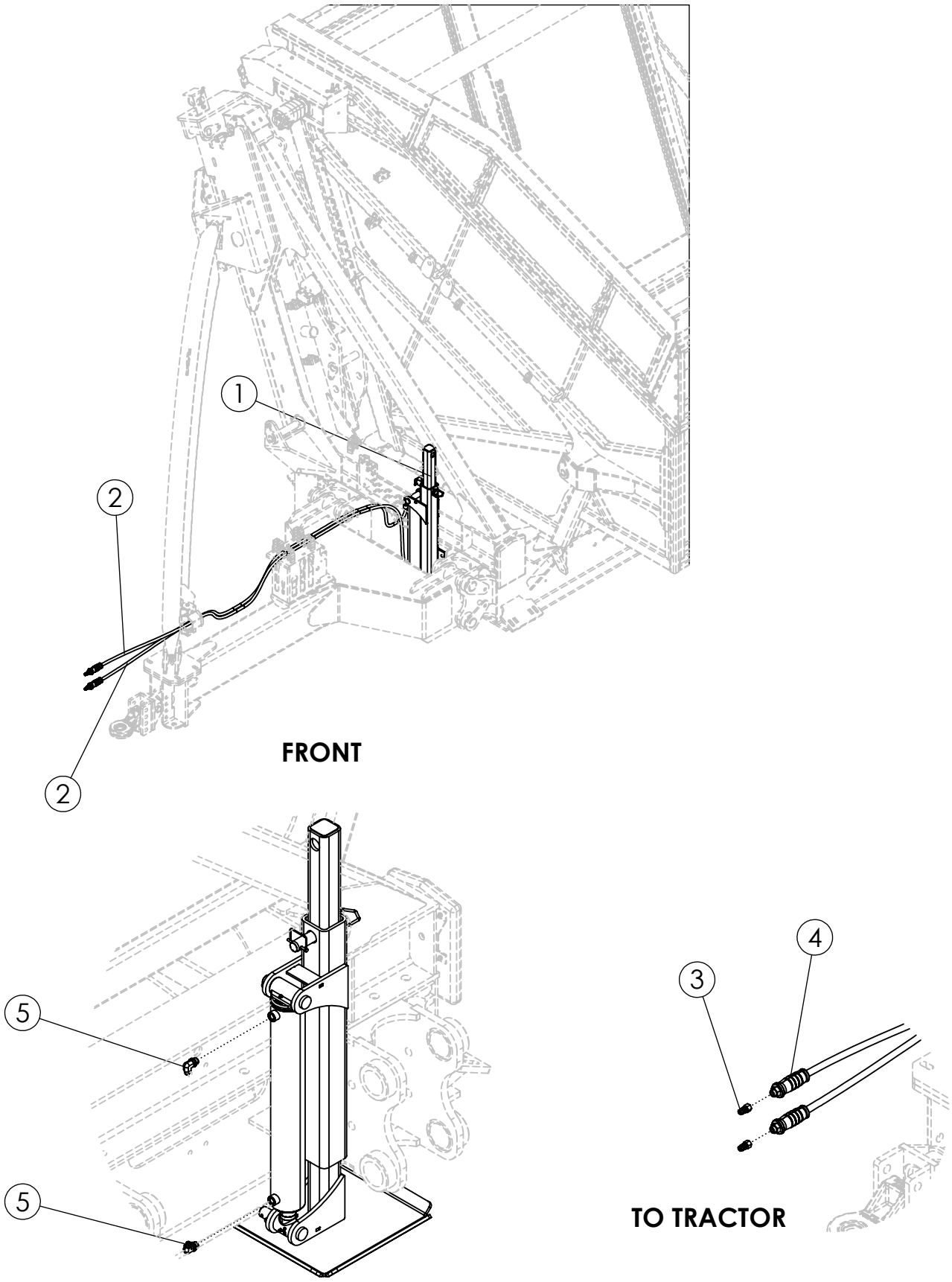
1
2
2
FRONT
5
5
4
3
TO TRACTOR

JACK HYDRAULICS			
ITEM	PART NO.	DESCRIPTION	QTY
1	318086	ASSY-HYDRAULIC JACK	1
2	318827	HOSE: .38 X 180 8MB-6FJX	2
3	36290	PIONEER TIP 8010-15P (#8 ORB)	2
4	301902	HYD LABEL: .50 BLUE/GRAY SET	1
5	58557	FTG-ELBOW: 8MB-6MJ-90	2

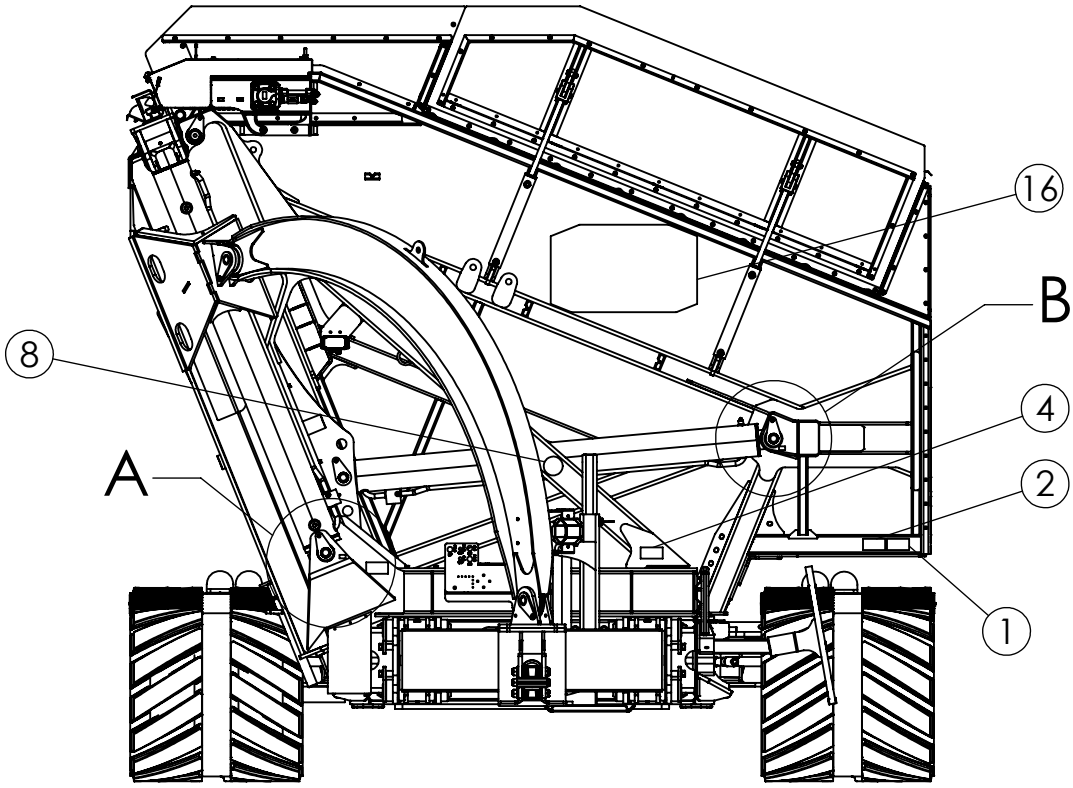

FRONT

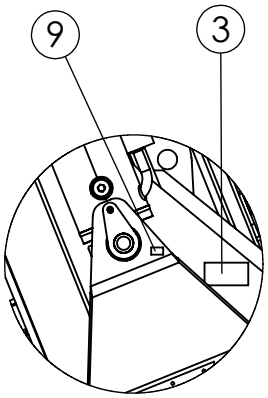

DETAIL A
SCALE 1 : 20

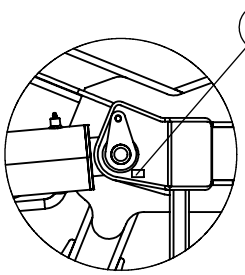

DETAIL B
SCALE 1 : 20

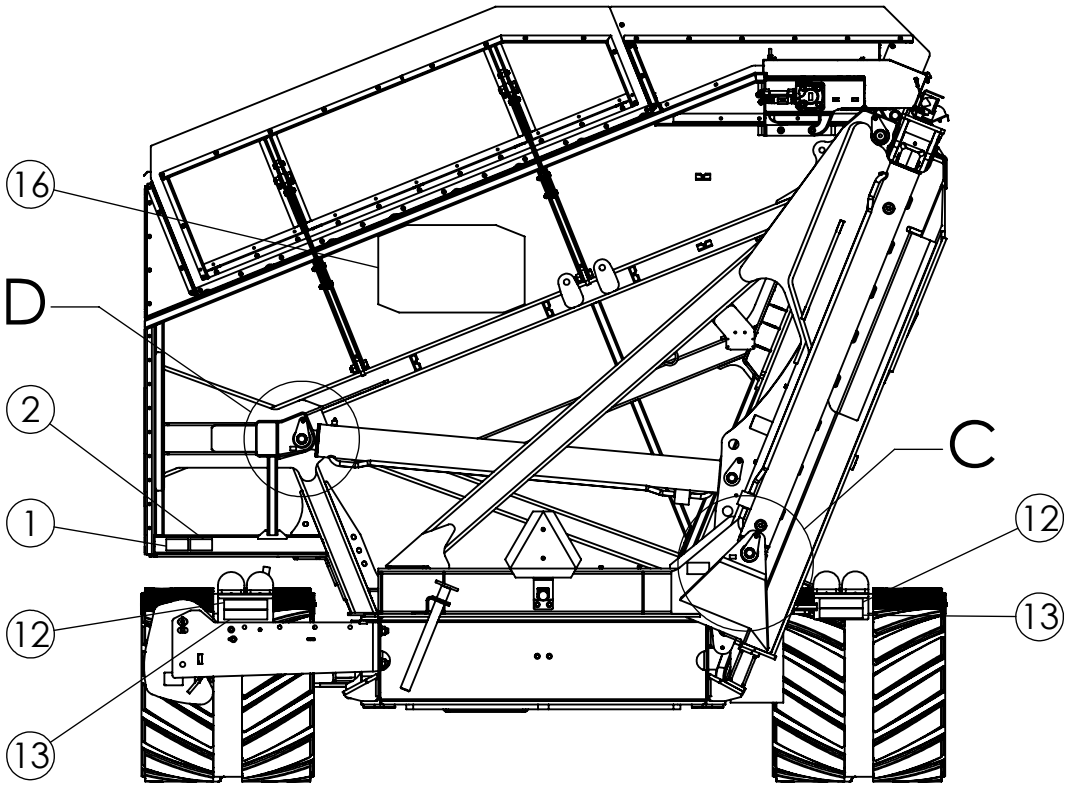

REAR

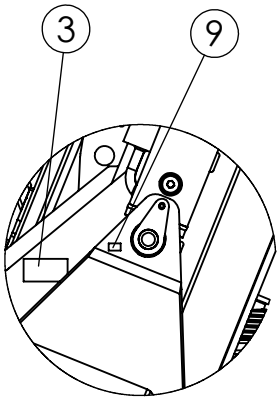

DETAIL C
SCALE 1 : 20

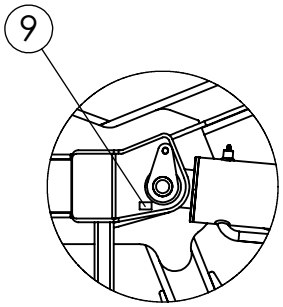

DETAIL D
SCALE 1 : 20

DECALS

1 997841 QTY 2

2 303265 QTY 2

3 997867 QTY 4

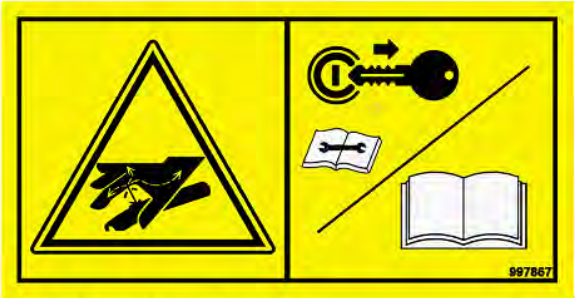

4 9971015 QTY 1

5 997859 QTY 1

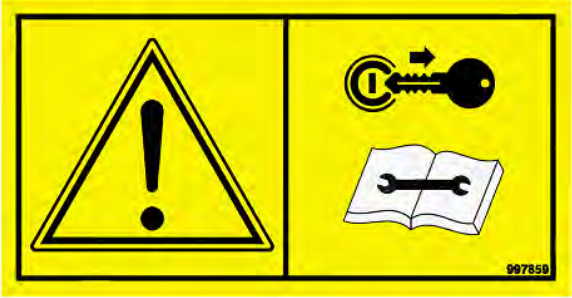

6 997861 QTY 1

7 63465 QTY 1

Amity
TECHNOLOGY

8 9971018 QTY 1

9 319014 QTY 13

12 HR
1 - 2 PUMPS

319014

10 319015 QTY 5

50 HR
1 PUMP

319015

CONTINUED

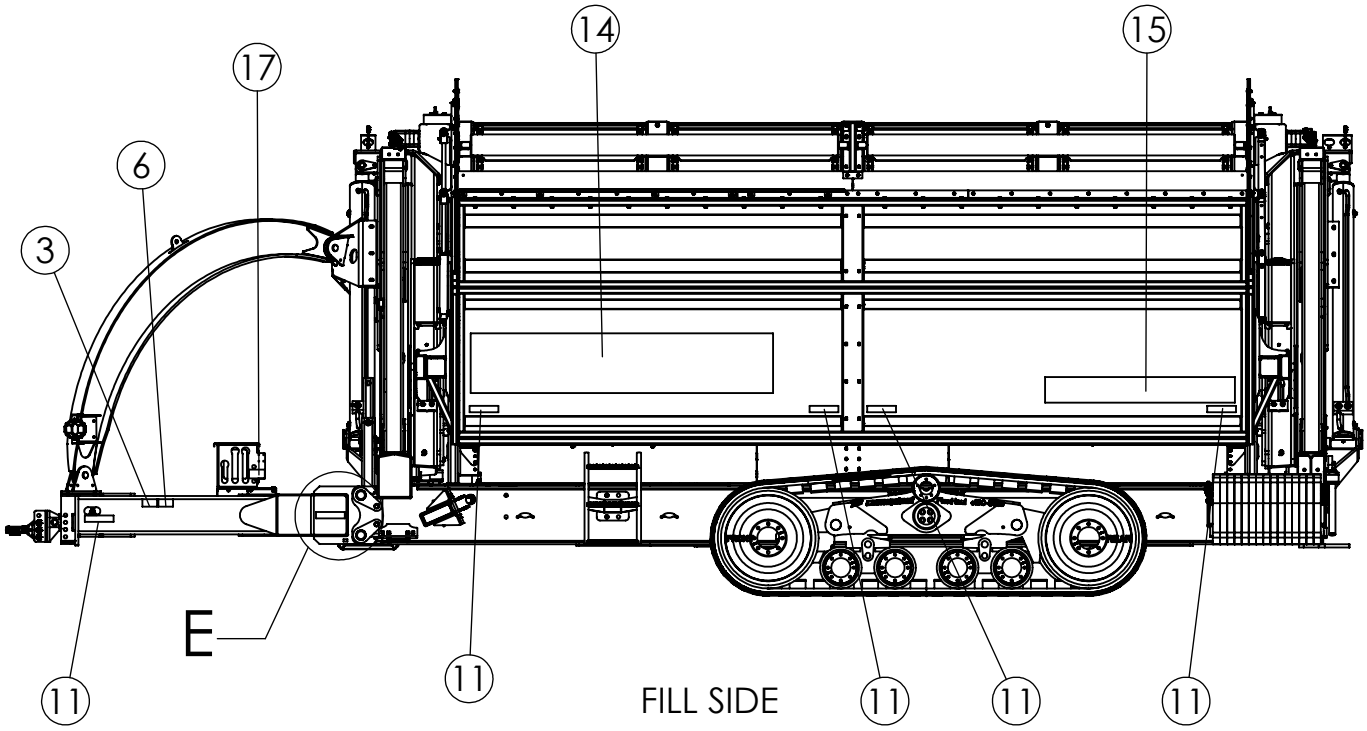

FILL SIDE

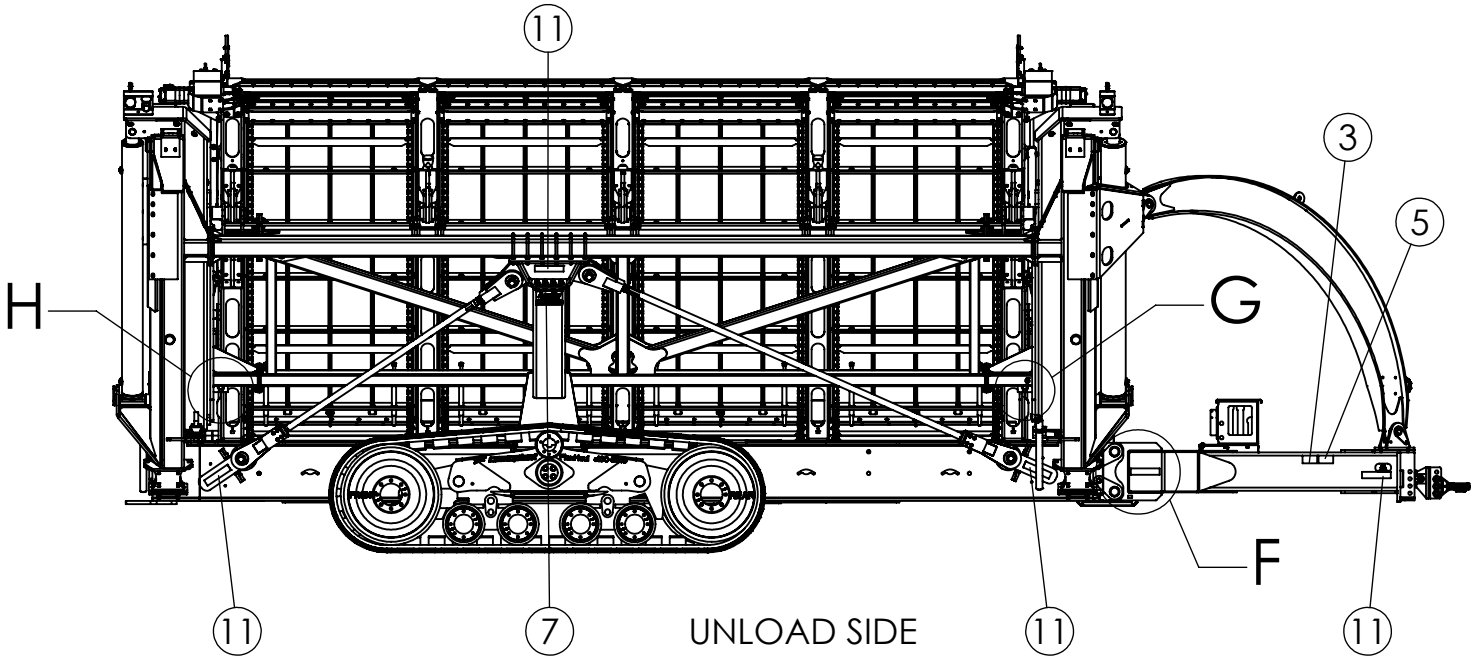

UNLOAD SIDE

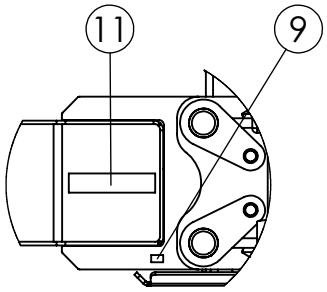

DETAIL E
SCALE 1 : 20

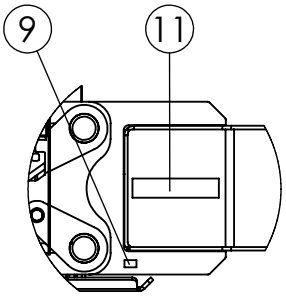

DETAIL F
SCALE 1 : 20

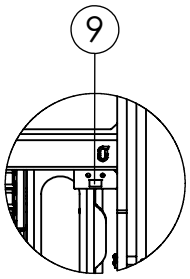

DETAIL G
SCALE 1 : 20

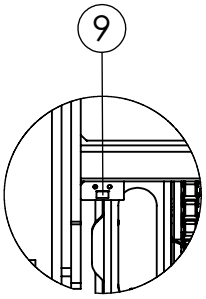

DETAIL H
SCALE 1 : 20

DECALS (CONTINUED)

11 65331 QTY 11

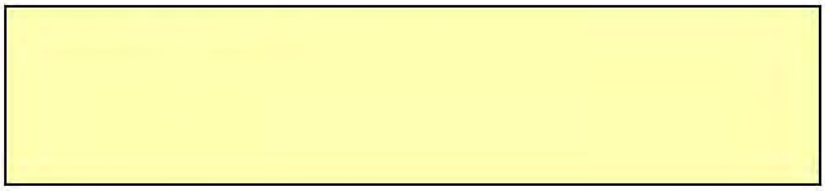

12 65332 QTY 2

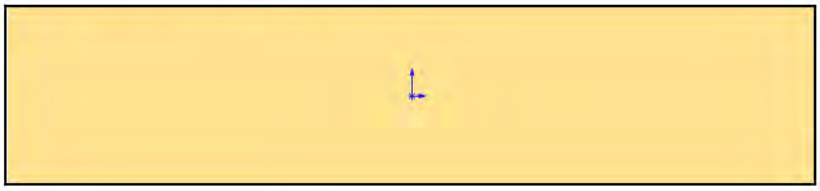

13 65330 QTY 2

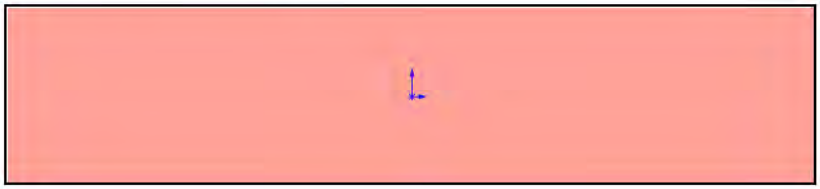

14 318694 QTY 1

15 318695 QTY 1

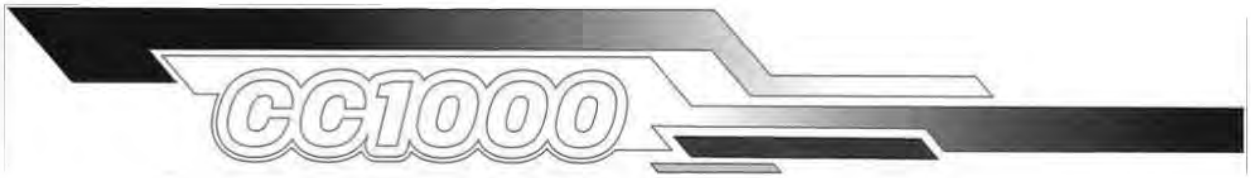

CONTINUED

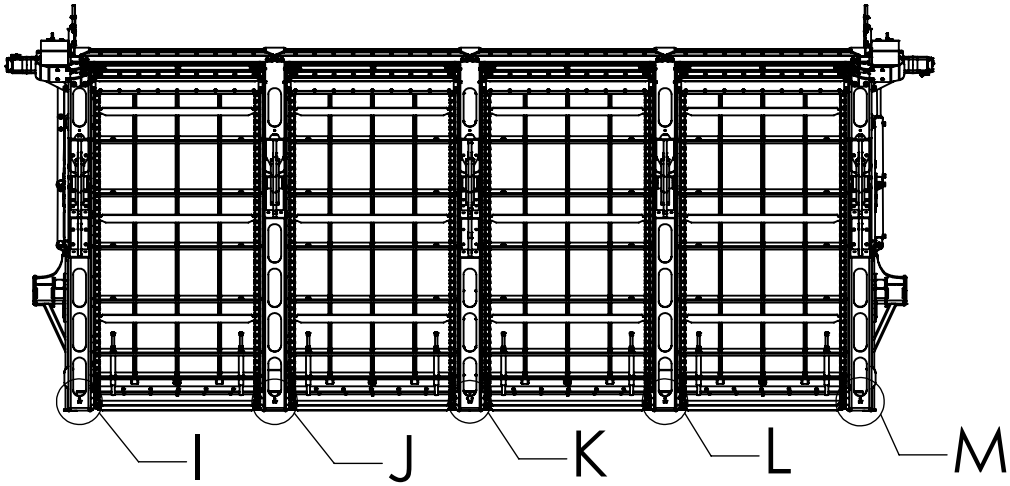

TANK

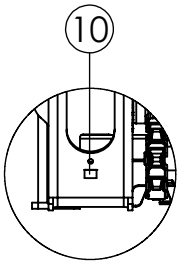

DETAIL I
SCALE 1 : 16

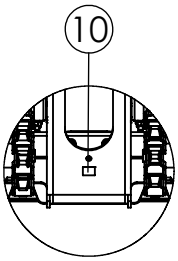

DETAIL J
SCALE 1 : 16

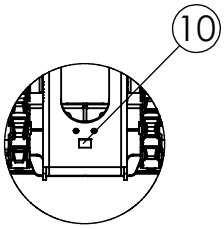

DETAIL K
SCALE 1 : 16

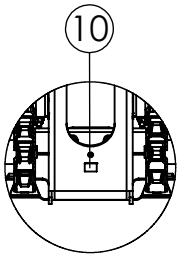

DETAIL L
SCALE 1 : 16

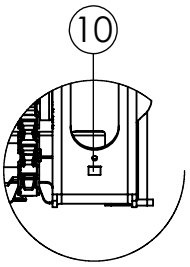

DETAIL M
SCALE 1 : 16

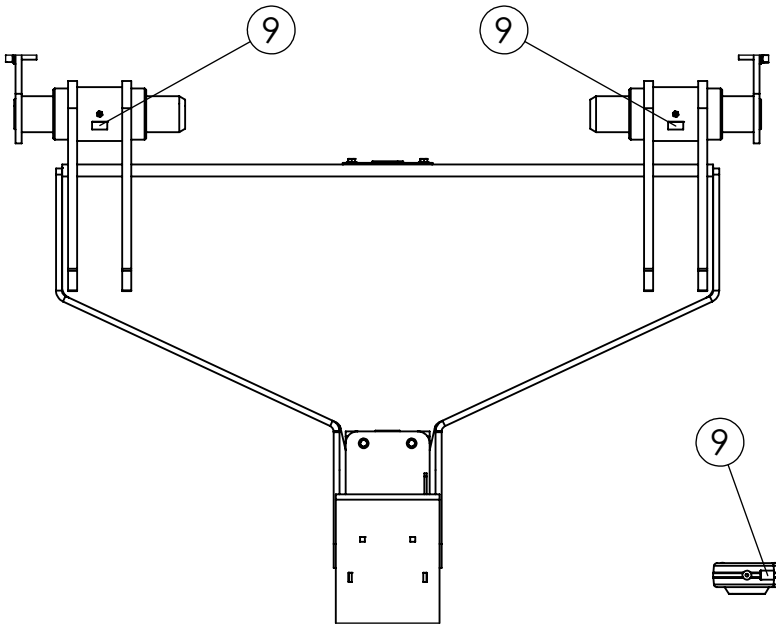

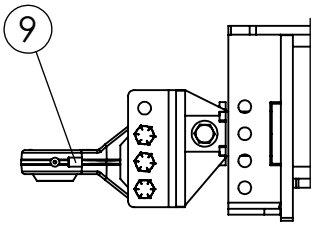

HITCH

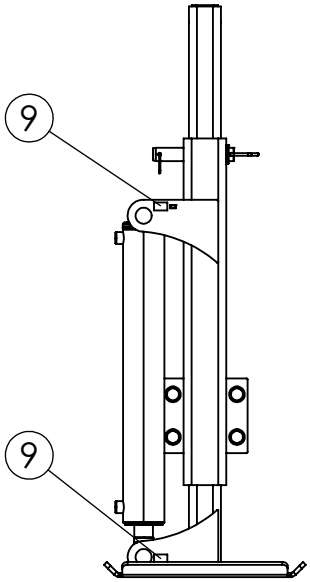

HYDRAULIC
JACK

DECALS (CONTINUED)

16 318696 QTY 2

17 319013 QTY 1

CC1000 HOSE CHART

Green	Lift Cylinders
Yellow	Tilt Cylinders
Red	Front Floor Chain
Black	Rear Floor Chain
Blue	Hydraulic Jack
Orange	Flip Down Tank Door
None	Case Drain

PN: 319013