PARTS MANUAL

2021

3500 DEFOLIATOR

8 ROW 22

6 ROW 30

2800 7th Avenue North
Fargo, ND 58102

Phone: (701) 232-4199
Fax: (701) 234-1716
www.amitytech.com

MANUAL PART NO: MPDE58

RELEASE DATE: 02/2023
DESIGNED AND MANUFACTURED IN USA

TABLE OF CONTENTS

HITCH ASSEMBLY..... 1-2
MAIN FRAME ASSEMBLY..... 3-4
DRIVE TRAIN..... 5-6
#1 FLAILS..... 7-16
#2 FLAILS..... 17-20
#3 FLAILS..... 21-28
FLAIL TUBE ASSEMBLY..... 29-30
STEEL FLAIL ASSEMBLY..... 31-32
FLAIL TUBE MOUNTING..... 33-34
FLAIL TUBE MOUNTING - STEEL FRONT DRUM OPTION..... 35-36
DOORS AND SHIELDS..... 37-40
STANDARD REAR STRUTS - 11.2 X 24 TIRES..... 41-42
STANDARD REAR STRUTS - 7.6 X 15 TIRES..... 43-44
STEERABLE REAR STRUTS - 11.2 X 24 TIRES..... 45-48
STEERABLE REAR STRUTS - 7.6 X 15 TIRES..... 49-52
STEERABLE REAR STRUTS UPPER DLS..... 53-54
STEERABLE REAR STRUTS - 11.2 X 24 22" CENTERING..... 55-56
SCALPER BAR ASSEMBLY..... 57-58
SCALPER BASKET..... 59-60
VALVE BLOCK AND MOUNT..... 61-64
SCALPER HYDRAULICS..... 65-66
ASSEMBLY - ROW FINDER MOUNT..... 67-68
SCALPER MOUNTED RF HYDRAULICS..... 69-70
FRAME MOUNTED RF..... 71-72
FRAME MOUNTED RF HYDRAULICS..... 73-74
ROW FINDER..... 75-78
HITCH HYDRAULICS..... 79-80
LIGHT KIT..... 81-82
DECALS..... 83-86
TOP DOOR LIFT..... 87-88
FLOATING HITCH KIT..... 89-90
GEARBOX-L TYPE (1.35:1) #68065..... 91-92
GEARBOX-L TYPE W/OVERRUN (1.35:1) #68066..... 93-94
GEARBOX-T TYPE (1.35:1) #68067..... 95-96
GEARBOX-T TYPE (1:1.93) #68068..... 97-98
STANDARD PTO (1-3/8" & 1-3/4") #69679 & #69680..... 99-100
1-3/8" CONSTANT VELOCITY PTO #69681..... 101-102
1-3/4" CONSTANT VELOCITY PTO #69682..... 101-102
CLUTCH-TORQUE LIMITER #305196 (CV) & #305198 (STD)..... 103-104
FRONT SIDE DRIVELINE #52399 & #68604..... 105-106
SIDE DRIVELINE #52397..... 105-106
COUPLER-UNIVERSAL JOINT #68443..... 107-108
HYDRAULIC LABEL ASSEMBLY..... 109-110
SNAP RING PLIERS..... 111

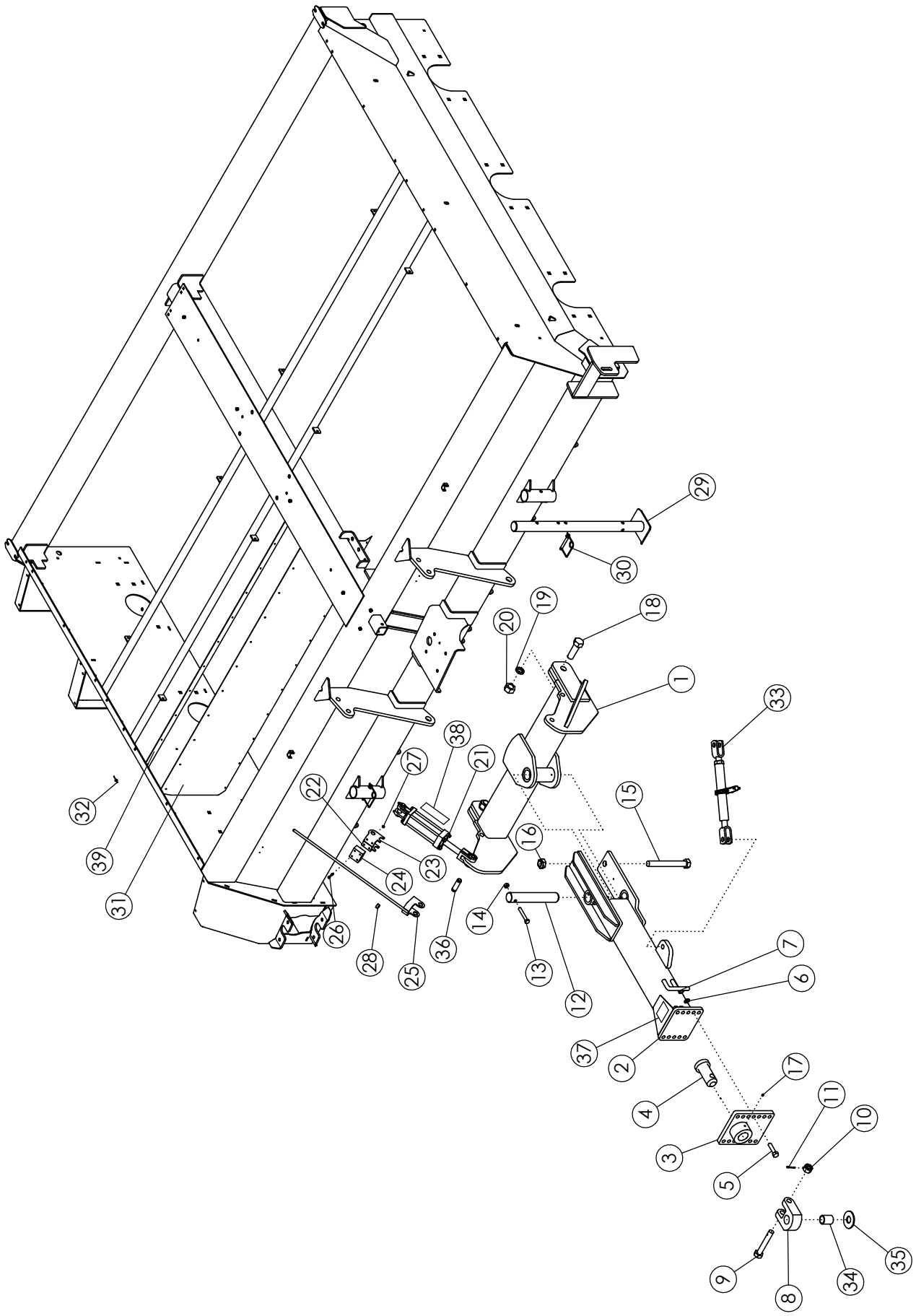
29
30
18
19
20
1
33
38
21
27
22
15
32
16
23
24
39
31
14
36
26
28
25
13
12
7
6
37
2
17
4
11
10
3
5
35
34
8
9

HITCH ASSEMBLY

ITEM	PART NO.	DESCRIPTION	QTY
1	50341	WLDMT - STD HITCH PIVOT	1
2	68277	WLDMT - DRAWPOLE DEF	1
3	57930	WLDMT-HITCH PLATE	1
4	62101	WLDMT-PIN	1
5	1012059	BOLT-HEX: .75 X 3.00 NC GR5 ZP	6
6	1012061	WASHER-LOCK: .75 ZP	6
7	1011620	NUT-HEX: .75 NC GR2 ZP	6
8	64476	PLATE-PULL HITCH	1
9	62477	BOLT-HITCH DRILLED	1
10	62088	NUT-SLOTTED: 1.13 NC GR5 ZP	1
11	1013473	PIN-COTTER: .19 X 2.00 NP	1
12	50678	PIN	1
13	1015117	BOLT-HEX: .63 X 4.00 NC GR8 ZP	1
14	1016595	NUT-TOPLOCK: .63 NC GR5 ZP	1
15	1030756	BOLT-HEX: 1.25 X 10.50 NC GR5 ZP	1
16	1030759	NUT-TOPLOCK: 1.25 NC ZP	1
17	1011748	ZERK - GREASE	5
18	1030757	BOLT-HEX: 1.38 X 4.25 NC GR5 ZP	2
19	1030760	WASHER-LOCK: 1.38 ZP	2
20	1030758	NUT-HEX: 1.38 NC ZP	2
21	58891	CYLINDER-HYDRAULIC 4 X 8" 3000	2
	301315	SEAL KT-CYL 4 X 8, 4 X 10 3000PSI UNIVERSAL	
22	63995	TOP_BRACKET - RH	1
23	63996	TOP_BRACKET - LH	1
24	63383	POLY GUIDE BLOCK	1
25	63999	WLDMT - BOTTOM_BRACKET	1
26	1016211	BOLT-HEX: .25 X 2.00 NC GR5	4
27	1030946	NUT-TOPLOCK: .25 NC GR5 ZP	4
28	63359	COLLAR-SET: .56 ZP	1
29	52073	WLDMT-STAND	2
30	52408	SPRING PIN: .50 X 3.50	2
31	68534	LINER-FRONT	2
32	56886	RIVET-POP: .19 X .675 ZP	44
33	52407	RATCHET JACK-PAINTED	1
34	64615	TUBE-SPACER 2.00 X 1.25	1
	64614	TUBE-SPACER 2.00 X 1.63	
35	58925	WASHER-HARDENED: 4.00 X 1.63	1
36	63406	PIN-CLEVIS: 1.00 X 4.00 ZP	1
37	52248	DECAL-CAUTION	1
38	63405	DECAL-DEPTH GAUGE	1
39	69107	STRIP-LINER BACK 8R	2

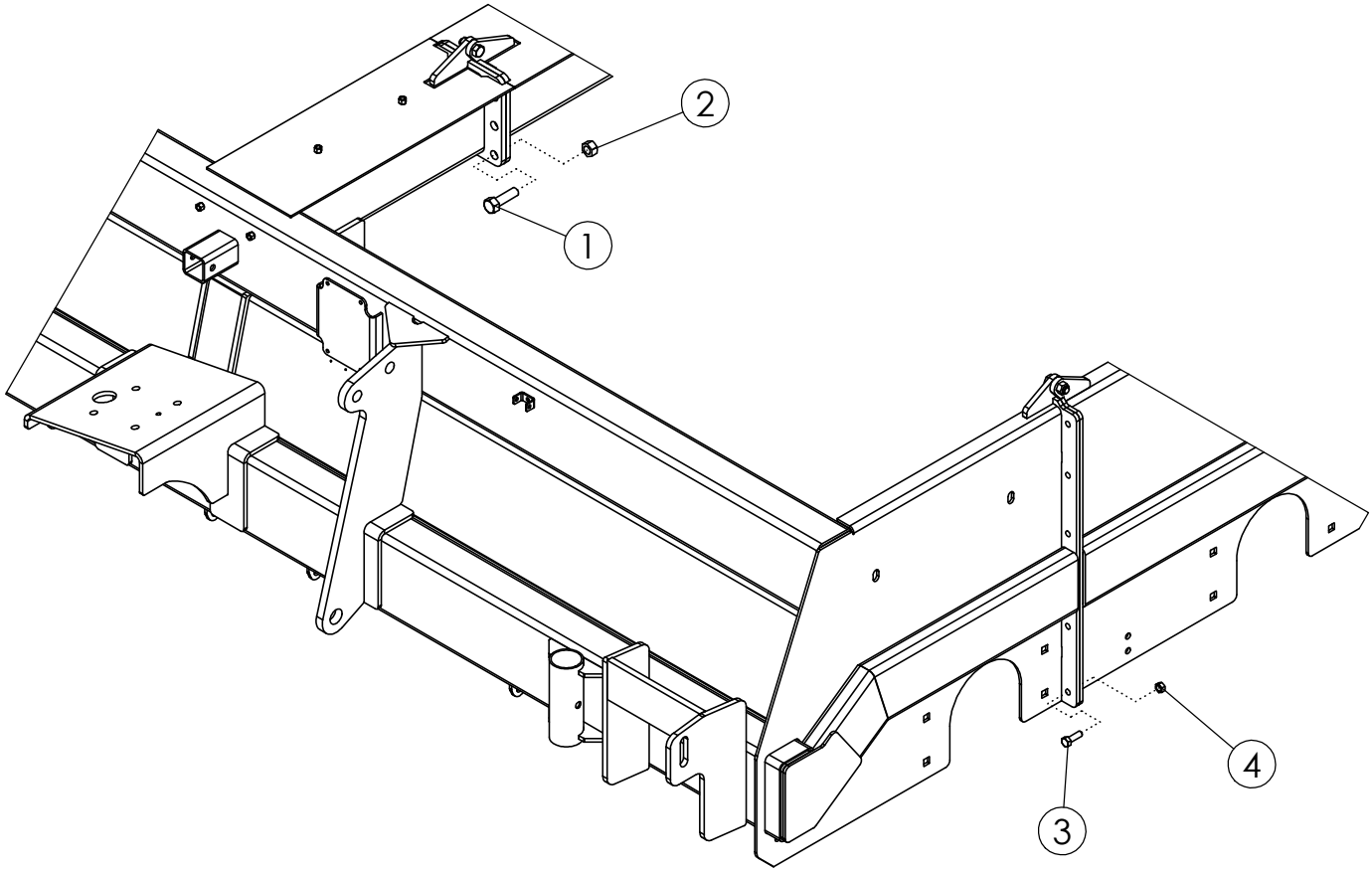
2
1
4
3

FRAME HARDWARE			
ITEM	**PART NO.**	**DESCRIPTION**	**QTY**
1	1016598	BOLT- HEX: .75 X 2.50 NC GR5 ZP	6
2	1017000	NUT-TOPLOCK: .75 NC GR5 ZP	6
3	1011607	BOLT-HEX: .50 X 1.50 NC GR5 ZP	22
4	1027461	NUT-TOPLOCK: .50 NC GR5 ZP	22

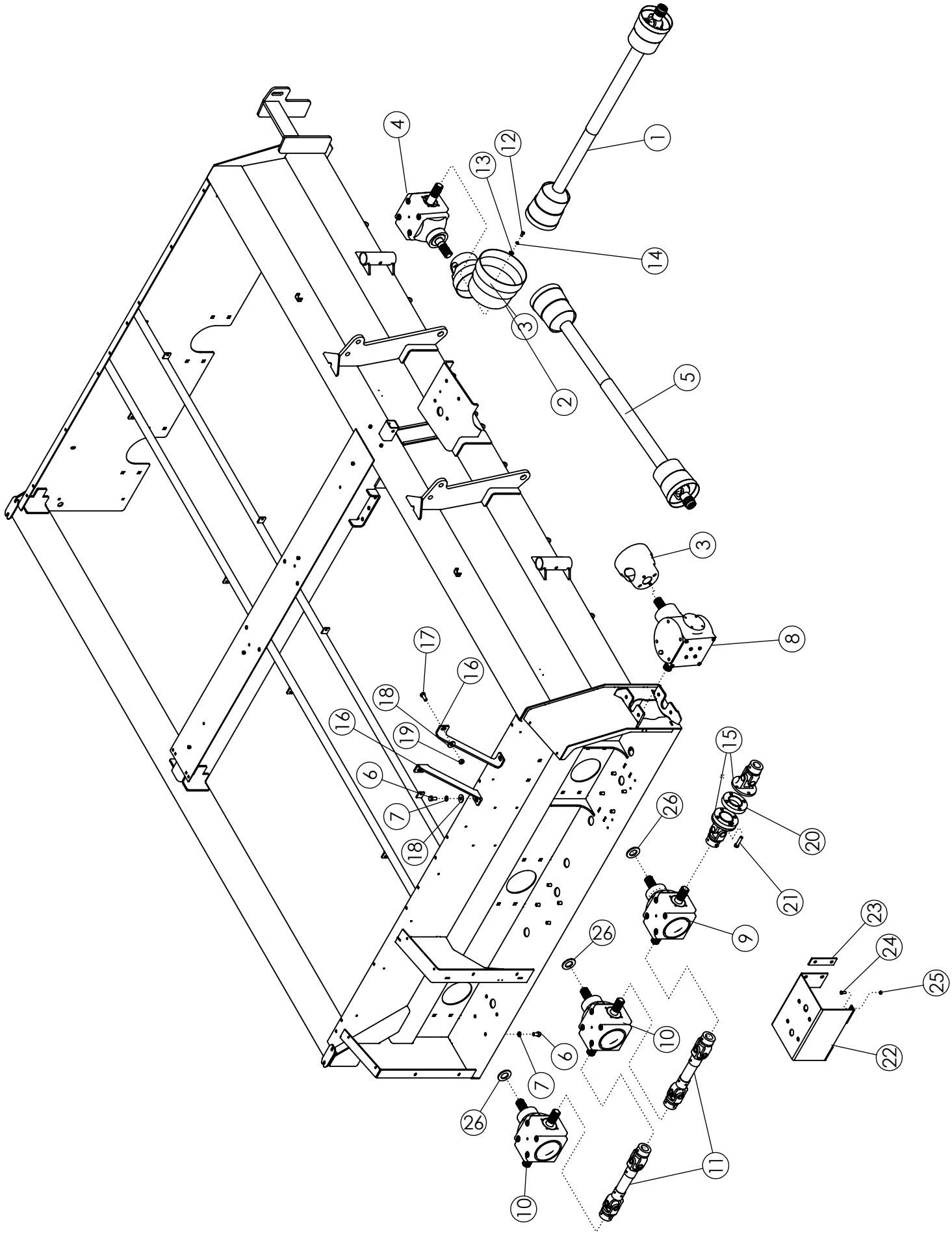
1
2
3
4
5
6
7
8
9
10
11
12
13
14
15
16
17
18
19
20
21
22
23
24
25
26

DRIVE TRAIN

ITEM	PART NO.	DESCRIPTION	QTY
1	69681	CONSTANT VELOCITY PTO 1.38"	1
	69682	CONSTANT VELOCITY PTO 1.75"	
	69679	STANDARD PTO 1.38"	
	69680	STANDARD PTO 1.75"	
2	52389	SHIELD CONE-LARGE	1
3	63972	SHIELD-CONE SMALL DRILLED	2
4	68065	GEARBPX-S2125 1..35:1 L	1
5	68604	CROSS-SHAFT - 8/R	1
6	306104	BOLT-FLG: M16 X 2.0 X L30 CL 10.9	24
7	1011813	WASHER LOCK: .63 ZP	22
8	68066	GEARBOX-S2125 1.35:1 LW/OVERRUN CLUTCH	1
9	68067	GEARBOX-S2125 1.35:1 T (NON STEEL FLAIL)	1
	68068	GEARBOX-S2125 1:1.93 T (STEEL FLAIL)	
10	68067	GEARBOX-S2125 1.35:1 T	1
11	52397	DRIVELINE-SIDE	2
12	68450	BOLT-HEX: M10 X 1.5 X L20	12
13	1011828	WASHER-FLAT: .38 ZP	12
14	1011586	WSHER-LOCK: .38 ZP	12
15	68443	COUPLER-U-JOINT	1
16	68970*	PLATE-GEARBOX SUPPORT	2
17	72063*	BOLT-CRG: .63 X 1.50 NC GR5 ZP	2
18	1013024*	WASHER FLAT: .63 ZP	4
19	1016595*	NUT-TOPLOCK: .63 NC GR5 ZP	2
20	305154	PLATE-SPACER COUPLER 90 DEG	1
21	305192	BOLT-HEX: .56 X 3.00 NC GR5 ZP	4
22	306095*	WLDMT-GEARBOX BRACE	1
23	306096*	PLATE-GEARBOX BRACE BACKING	2
24	1011600*	BOLT-HEX: .38 X 1.00 NC GR5 ZP	4
25	1016999*	NUT-TOPLOCK: .38 NC GR5 ZP	4
26	306388	RUBBER-FLAIL TUBE SPACER	6

* USE WITH STEEL FRONT DRUM ONLY

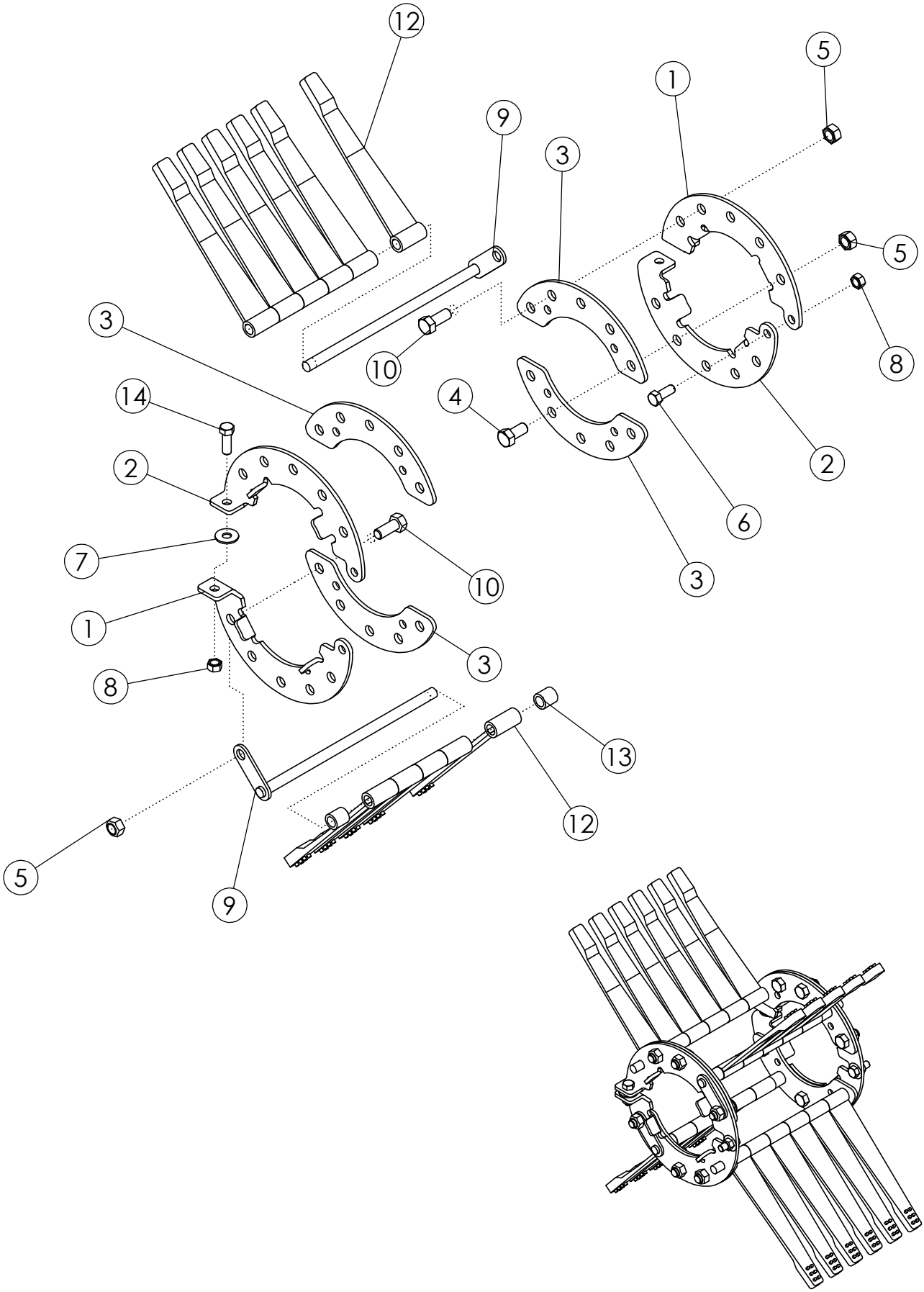
12
5
1
9
3
5
3
8
10
14
4
2
2
6
7
10
3
1
3
8
13
12
5
9

RUBBER FLAILS ON #1 DRUM FORWARD 22" SPACING (#52123)

ITEM	PART NO.	DESCRIPTION	QTY
1	52062	FLAIL RING-LH	2
2	52061	FLAIL RING-RH	2
3	58084	PLATE-REINFORCEMENT ZP	4
4	1032509	BOLT-HEX: .63 X 1.25 NC GR5 ZP	8
5	1016595	NUT-TOPLOCK: .63 NC GR5 ZP	12
6	1011606	BOLT-HEX: .50 X 1.25 NC GR5 ZP	2
7	1014443	WASHER-FLAT: .50 ZP	2
8	1027461	NUT-TOPLOCK: .50 NC GR5 ZP	4
9	305557	FLAIL ROD	4
10	1014349	BOLT-HEX: .63 X 1.50 NC GR5 ZP	4
11	1013024	WASHER-FLAT: .63 ZP	4
12	52356	FLAIL-STUDDED 1 X 12	22
13	51549	SPACER 1	4
14	1011607	BOLT-HEX: .50 X 1.50 NC GR5 ZP	2

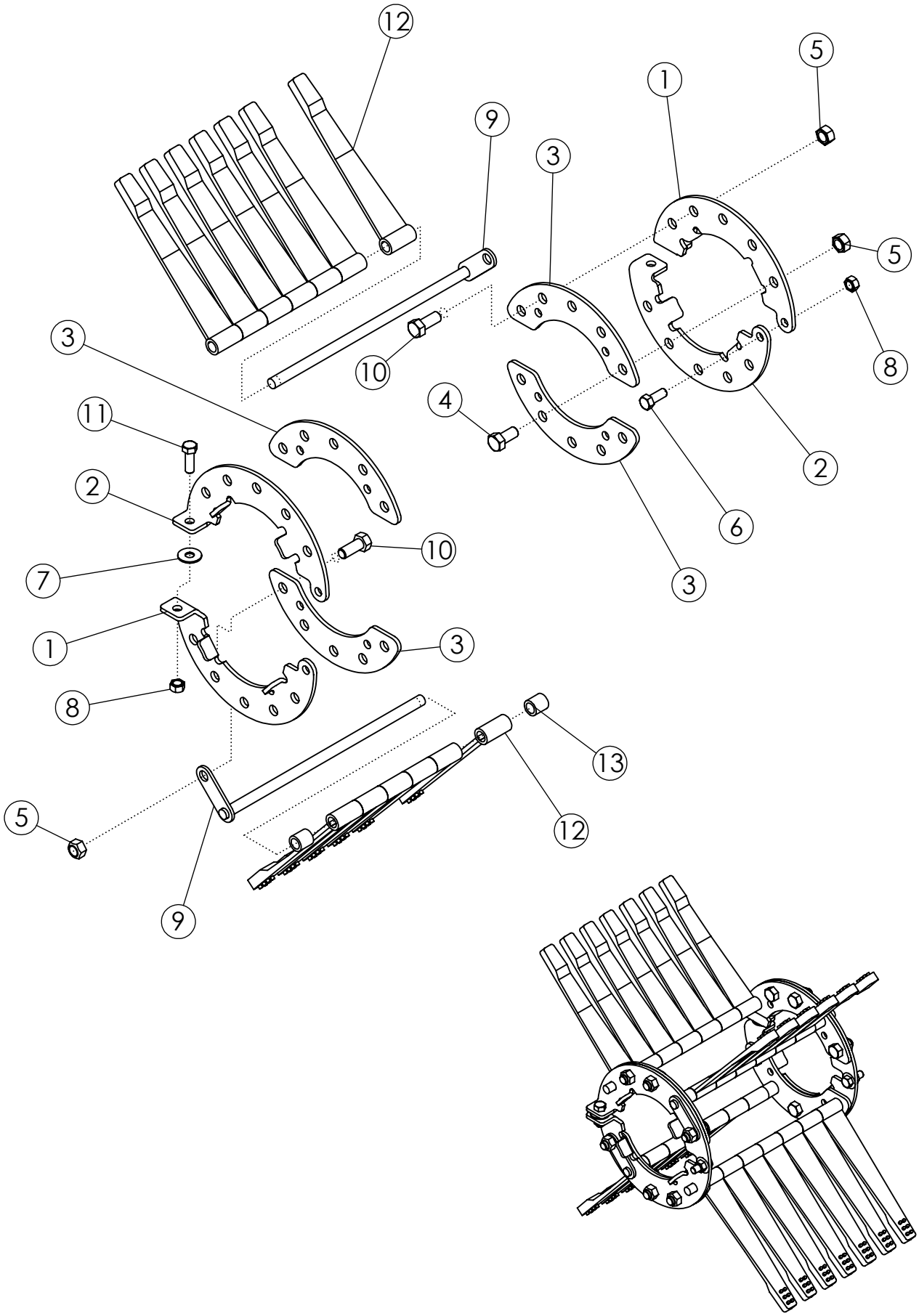
12
5
1
9
3
5
3
10
8
4
11
2
6
2
10
7
3
1
3
8
13
5
12
9

RUBBER FLAILS ON #1 DRUM FORWARD 30" SPACING			
ITEM	**PART NO.**	**DESCRIPTION**	**QTY**
1	52062	FLAIL RING-LH	2
2	52061	FLAIL RING-RH	2
3	58084	PLATE-REINFORCEMENT ZP	4
4	1032509	BOLT-HEX: .63 X 1.25 NC GR5 ZP	8
5	1016595	NUT-TOPLOCK: .63 NC GR5 ZP	12
6	1011606	BOLT-HEX: .50 X 1.25 NC GR5 ZP	2
7	1014443	WASHER-FLAT: .50 ZP	2
8	1027461	NUT-TOPLOCK: .50 NC GR5 ZP	4
9	305556	FLAIL ROD	4
10	1014349	BOLT-HEX: .63 X 1.50 NC GR5 ZP	4
11	1011607	BOLT-HEX: .50 X 1.50 NC GR5 ZP	2
12	52356	FLAIL-STUDDED 1 X 12	26
	52354	FLAIL-RUBBER 1 X 12 (PREMIER)	
	307261	FLAIL-RUBBER 2 X 12	
13	51549	SPACER 1	4

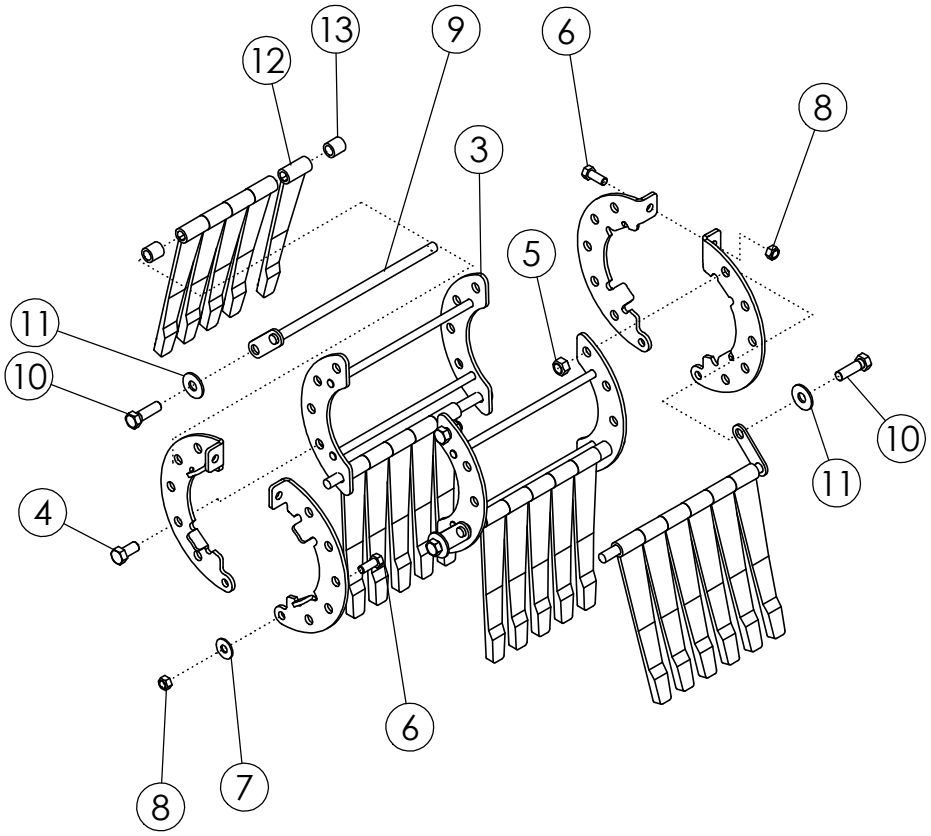
13
9
6
12
8
3
5
11
10
10
11
4
6
8
7

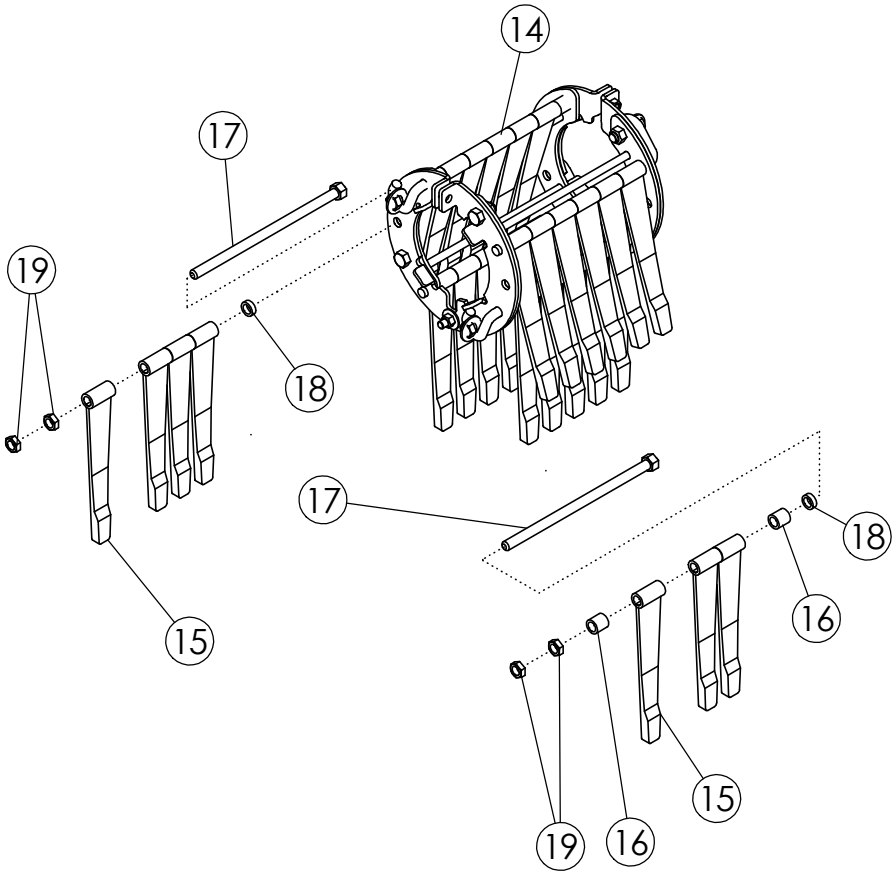
14
17
19
18
17
18
16
15
15
19
16

RUBBER FLAILS ON #1 DRUM REVERSE 22" SPACING			
ITEM	**PART NO.**	**DESCRIPTION**	**QTY**
1	52062	FLAIL RING-LH	2
2	52061	FLAIL RING-RH	2
3	58167	WLDMT-FRONT BAIL	2
4	1032509	BOLT-HEX: .63 X 1.25 NC GR5 ZP	4
5	1016595	NUT-TOPLOCK: .63 NC GR5 ZP	8
6	1011606	BOLT-HEX: .50 X 1.25 NC GR5 ZP	4
7	1014443	WASHER-FLAT: .50 ZP	2
8	1027461	NUT-TOPLOCK: .50 NC GR5 ZP	4
9	305557	FLAIL ROD	4
10	1011623	BOLT-HEX: .63 X 2.00 NC GR5 ZP	4
11	1013024	WASHER-FLAT: .63 ZP	4
12	52356	FLAIL-STUDDED 1 X 12	22
13	51549	SPACER 1	4
IN BETWEEN ROWS: 22" SPACING			
14	58542*	ASSY-FLAIL #1 22" REVERSE	1
15	52356	FLAIL-STUDDED 1 X 12	7
16	51549	SPACER 1	2
17	64600	WLDMT-FLAIL ROD REVERSE 22"	2
18	51547	SPACER 5/16	2
19	1026259	NUT-JAM: .63 NC GR2 ZP	4

*ITEMS ARE 1-13 ARE INCLUDED IN ITEM 14

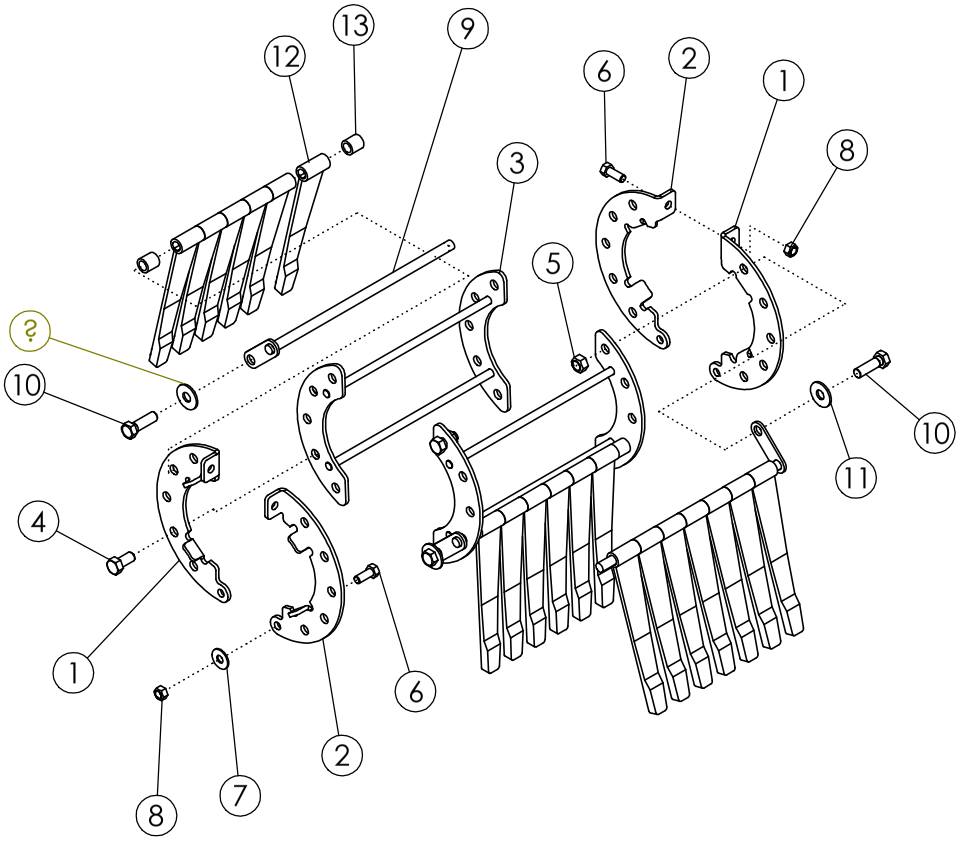
8
7
2
6
1
4
10
?
5
3
9
13
12
11
10
1
2
8

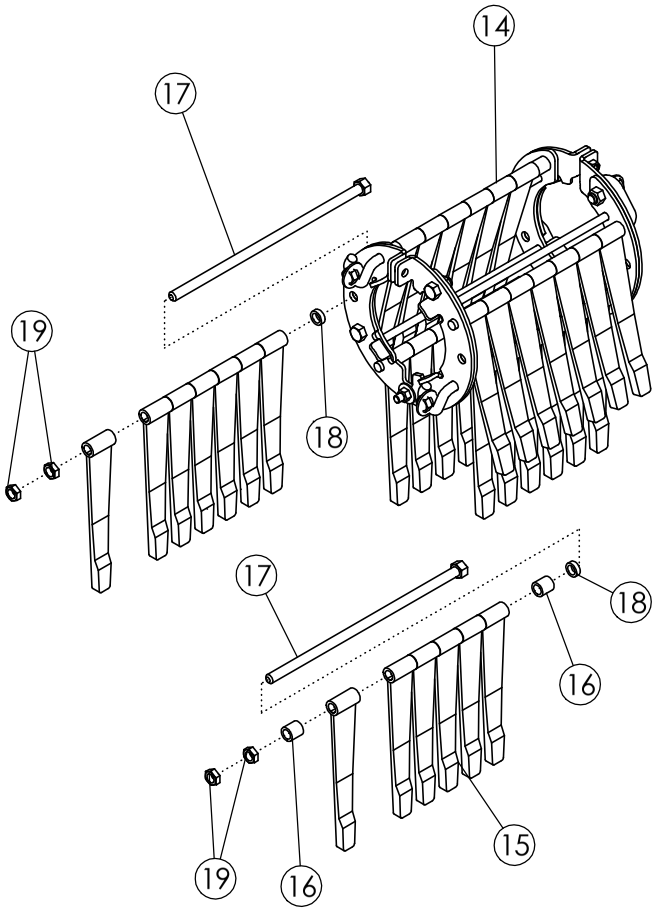
14
17
19
18
17
18
16
19
16
15

RUBBER FLAILS ON #1 DRUM REVERSE 30" SPACING

ITEM	PART NO.	DESCRIPTION	QTY
1	52062	FLAIL RING-LH	2
2	52061	FLAIL RING-RH	2
3	62254	WLDMT-FRONT BAIL	2
4	1032509	BOLT-HEX: .63 X 1.25 NC GR5 ZP	4
5	1016595	NUT-TOPLOCK: .63 NC GR5 ZP	8
6	1011606	BOLT-HEX: .50 X 1.25 NC GR5 ZP	4
7	1014443	WASHER-FLAT: .50 ZP	2
8	1027461	NUT-TOPLOCK: .50 NC GR5 ZP	4
9	305556	WLDMT-6 FLAIL ROD 15.75" ZP	4
10	1011623	BOLT-HEX: .63 X 2.00 NC GR5 ZP	4
11	1013024	WASHER-FLAT: .63 ZP	4
12	52356	FLAIL-STUDDED 1 X 12	26
13	51549	SPACER 1	4
	IN BETWEEN ROWS: 30" SPACING		
14	58543*	ASSY-FLAIL #1 30" REVERSE	1
15	52356	FLAIL-STUDDED 1 X 12	13
16	51549	SPACER 1	2
17	64755	WLDMT-FLAIL ROD REVERSE 30"	2
18	51547	SPACER 5/16	2
19	1026259	NUT-JAM: .63 NC GR2 ZP	4

*ITEMS ARE 1-13 ARE INCLUDED IN ITEM 14

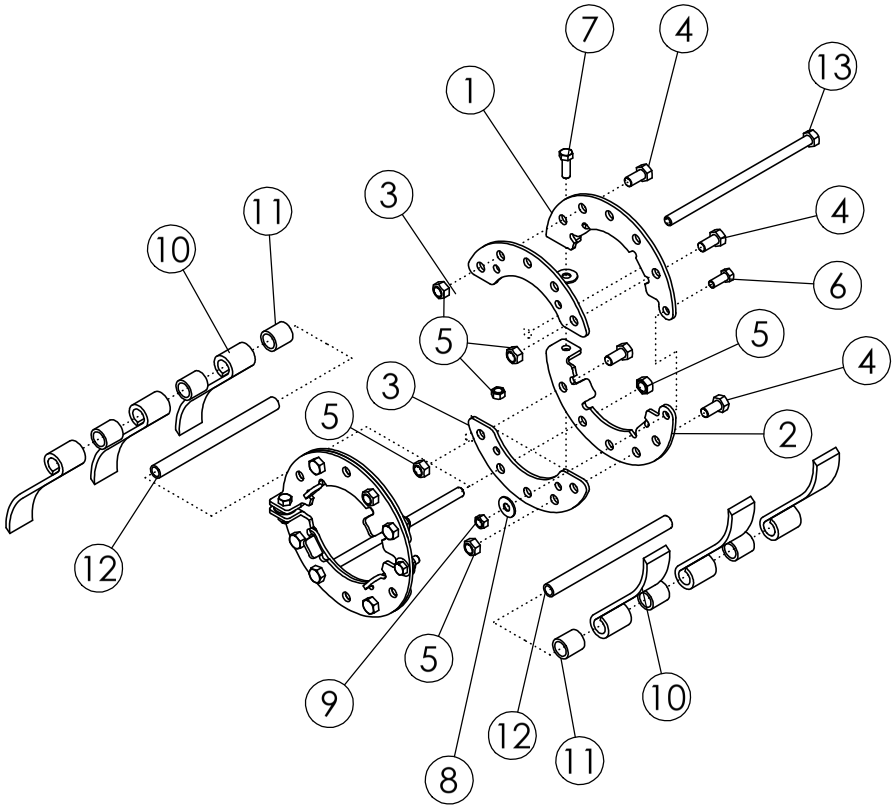
7
4
13
1
3
11
4
10
6
5
5
4
3
2
5
12
5
9
10
12
11
8

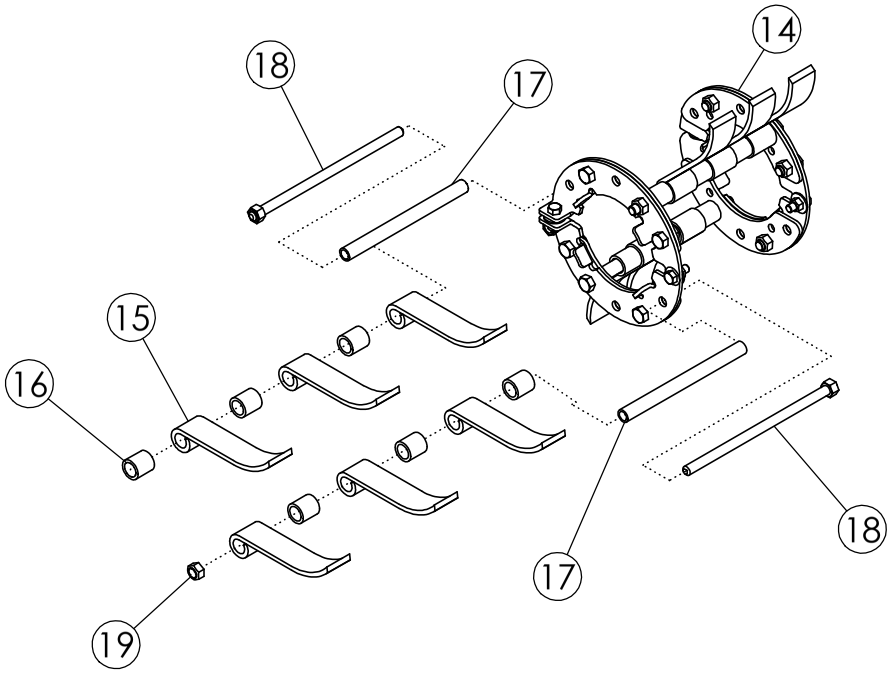
14
18
17
15
16
18
17
19

STEEL CUP FLAILS #1 DRUM REVERSE			
ITEM	**PART NO.**	**DESCRIPTION**	**QTY**
1	52062	FLAIL RING LH - ZP	2
2	52061	FLAIL RING RH - ZP	2
3	58084	PLATE	4
4	1032509	BOLT-HEX: .63 X 1.25 NC GR5 ZP	4
5	1016595	NUT-TOPLOCK: .63 NC GR5 ZP	6
6	1011606	BOLT-HEX: .50 X 1.25 NC GR5 ZP	2
7	1011607	BOLT-HEX: .50 X 1.50 NC GR5 ZP	2
8	1014443	WASHER-FLAT: .50 ZP	2
9	1027461	NUT-TOPLOCK: .50 NC GR5 ZP	4
10	68479	FLAIL-CUP 8"	6
	69985	FLAIL-CUP 9.5"	
11	68546	SPACER 1.45"	6
12	68553	BUSHING-FLAIL 10.50"	2
13	306767	BOLT-HEX: .63 X 12.50 NC GR5 ZP	2
IN BETWEEN ROWS			
14	68545*	ASSY-FLAIL CUP 6.63"	1
	69984*	ASSY-FLAIL CUP 6.63" LONG	
15	68479	FLAIL-CUP 8"	6
	69985	FLAIL-CUP 9.5"	
16	68546	SPACER 1.45"	6
17	68553	BUSHING-FLAIL 10.50"	2
18	68549	WLDMT-FLAIL ROD CUP	2
19	306767	BOLT-HEX: .63 X 12.50 NC GR5 ZP	2

*ITEMS 1-13 ARE INCLUDED IN ITEM 14

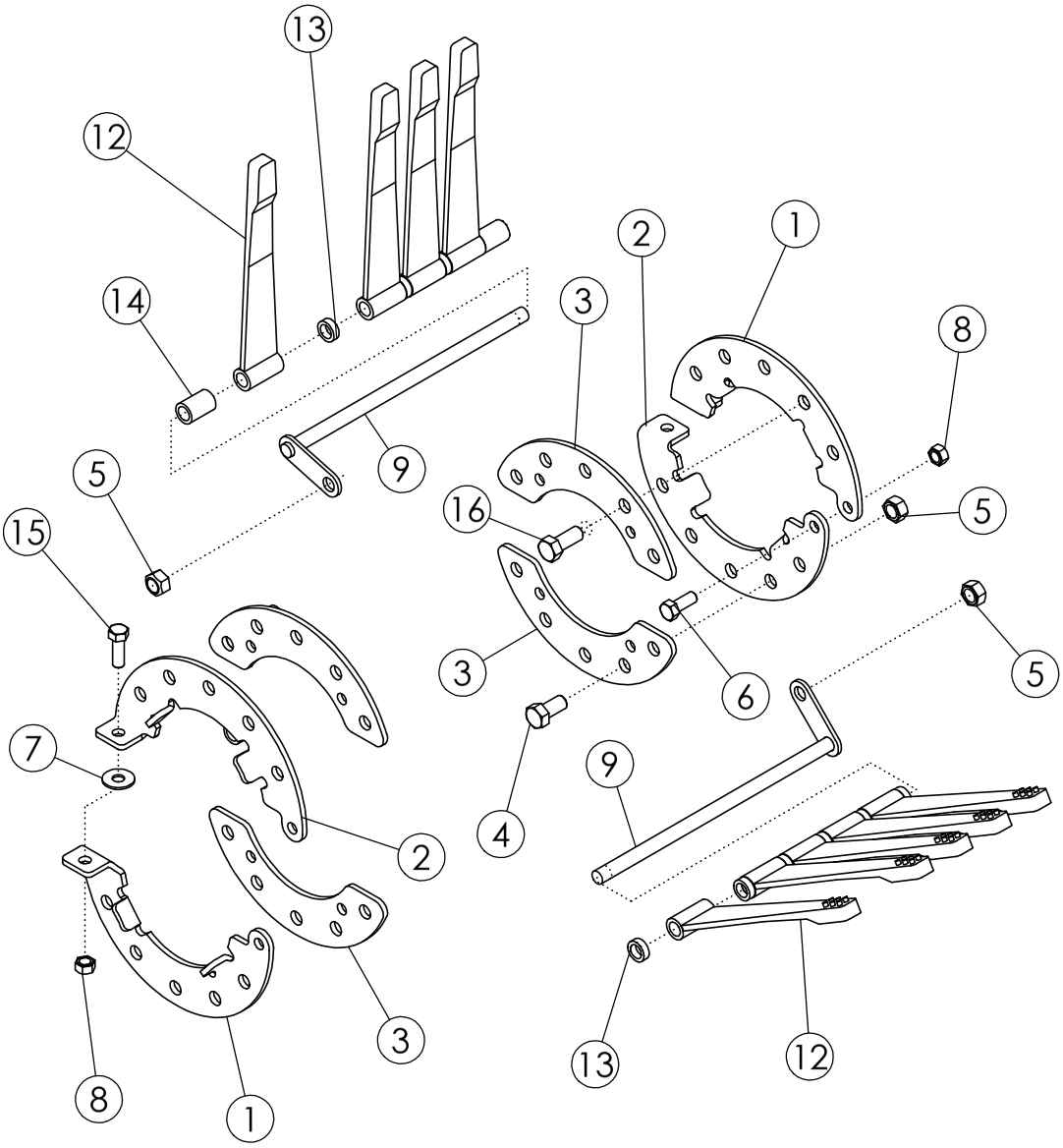
13
12
14
9
5
15
7
8
1
3
2
3
16
3
6
4
8
5
5
9
13
12

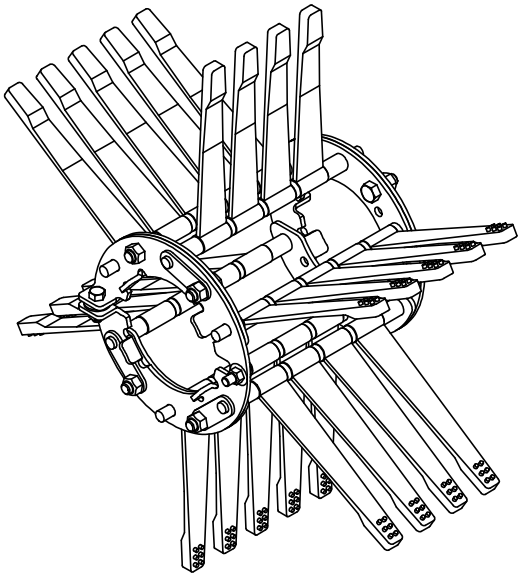

FLAILS ON #2 DRUM

ITEM	PART NO.	DESCRIPTION	QTY
1	52062	FLAIL RING-LH	2
2	52061	FLAIL RING-RH	2
3	58084	PLATE-REINFORCEMENT ZP	4
4	1032509	BOLT-HEX: .63 X 1.25 NC GR5 ZP	2
5	1016595	NUT-TOPLOCK: .63 NC GR5 ZP	8
6	1011606	BOLT-HEX: .50 X 1.25 NC GR5 ZP	2
7	1014443	WASHER-FLAT: .50 ZP	2
8	1027461	NUT-TOPLOCK: .50 NC GR5 ZP	4
9	305557	FLAIL ROD	6
10	1011623	BOLT-HEX: .63 X 2.00 NC GR5 ZP	6
11	1013024	WASHER-FLAT: .63 ZP	6
12	52356	FLAIL-STUDDED 1 X 12	27
	52354	FLAIL-RUBBER 1 X 12 (PREMIER)	27
13	51547	SPACER 5/16	27
14	51548	SPACER 1-7/16	6
15	1011607	BOLT-HEX: .50 X 1.50 NC GR5 ZP	2
16	1014349	BOLT-HEX: .63 X 1.50 NC GR5 ZP	6

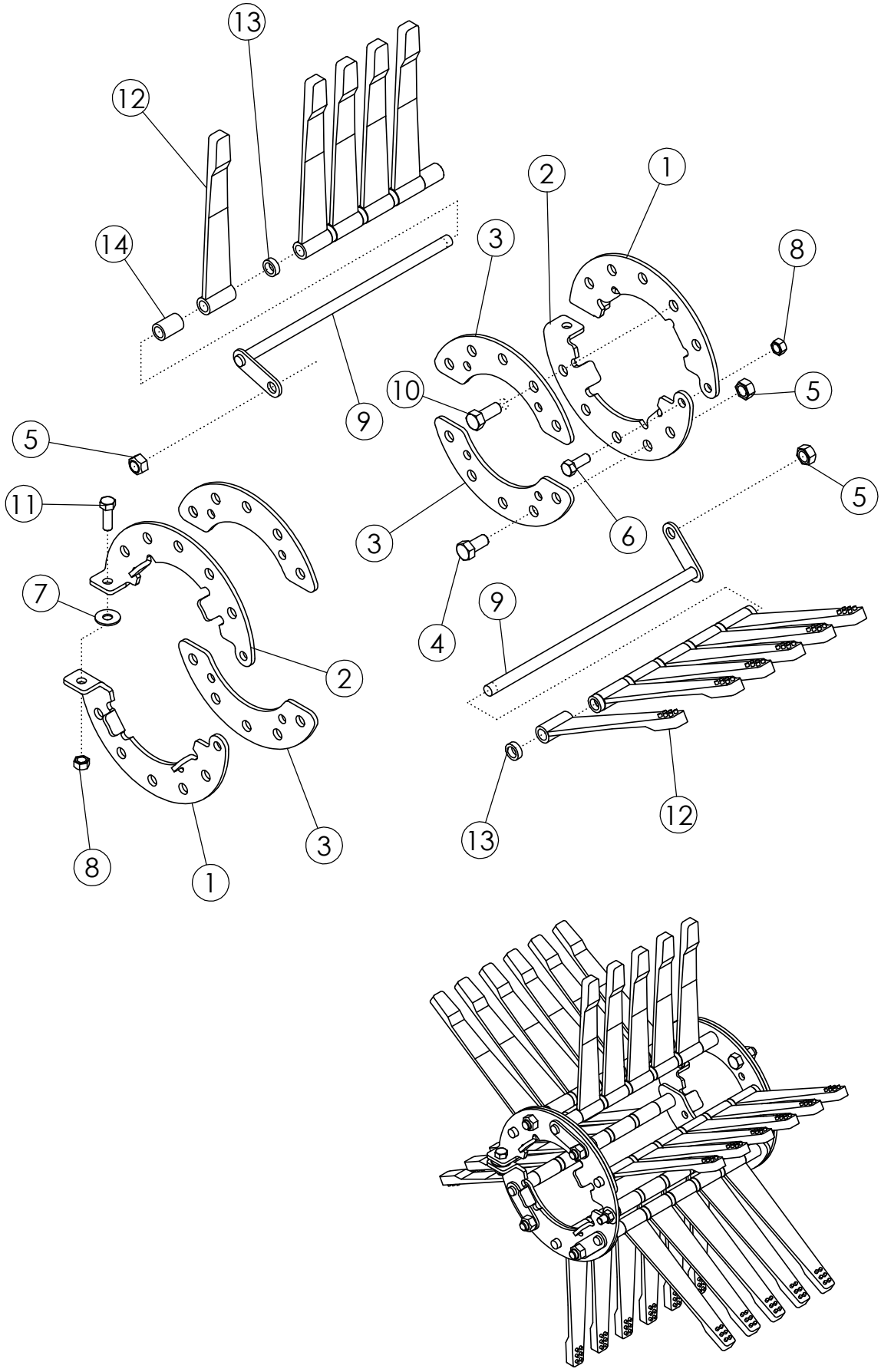
13
12
14
9
5
11
7
8
1
2
3
2
1
3
8
5
10
3
6
4
5
9
13
12

FLAILS ON #2 DRUM 30" SPACING			
ITEM	**PART NO.**	**DESCRIPTION**	**QTY**
1	52062	FLAIL RING-LH	2
2	52061	FLAIL RING-RH	2
3	58084	PLATE-REINFORCEMENT ZP	4
4	1032509	BOLT-HEX: .63 X 1.25 NC GR5 ZP	2
5	1016595	NUT-TOPLOCK: .63 NC GR5 ZP	8
6	1011606	BOLT-HEX: .50 X 1.25 NC GR5 ZP	2
7	1014443	WASHER-FLAT: .50 ZP	2
8	1027461	NUT-TOPLOCK: .50 NC GR5 ZP	4
9	305556	WLDMT-6 FLAIL ROD 15.75" ZP	6
10	1014349	BOLT-HEX: .63 X 1.50 NC GR5 ZP	6
11	1011607	BOLT-HEX: .50 X 1.50 NC GR5 ZP	2
12	52356	FLAIL-STUDDED 1 X 12	33
	52354	FLAIL-RUBBER 1 X 12 (PREMIER)	33
13	51547	SPACER 5/16	33
14	51548	SPACER 1-7/16	6

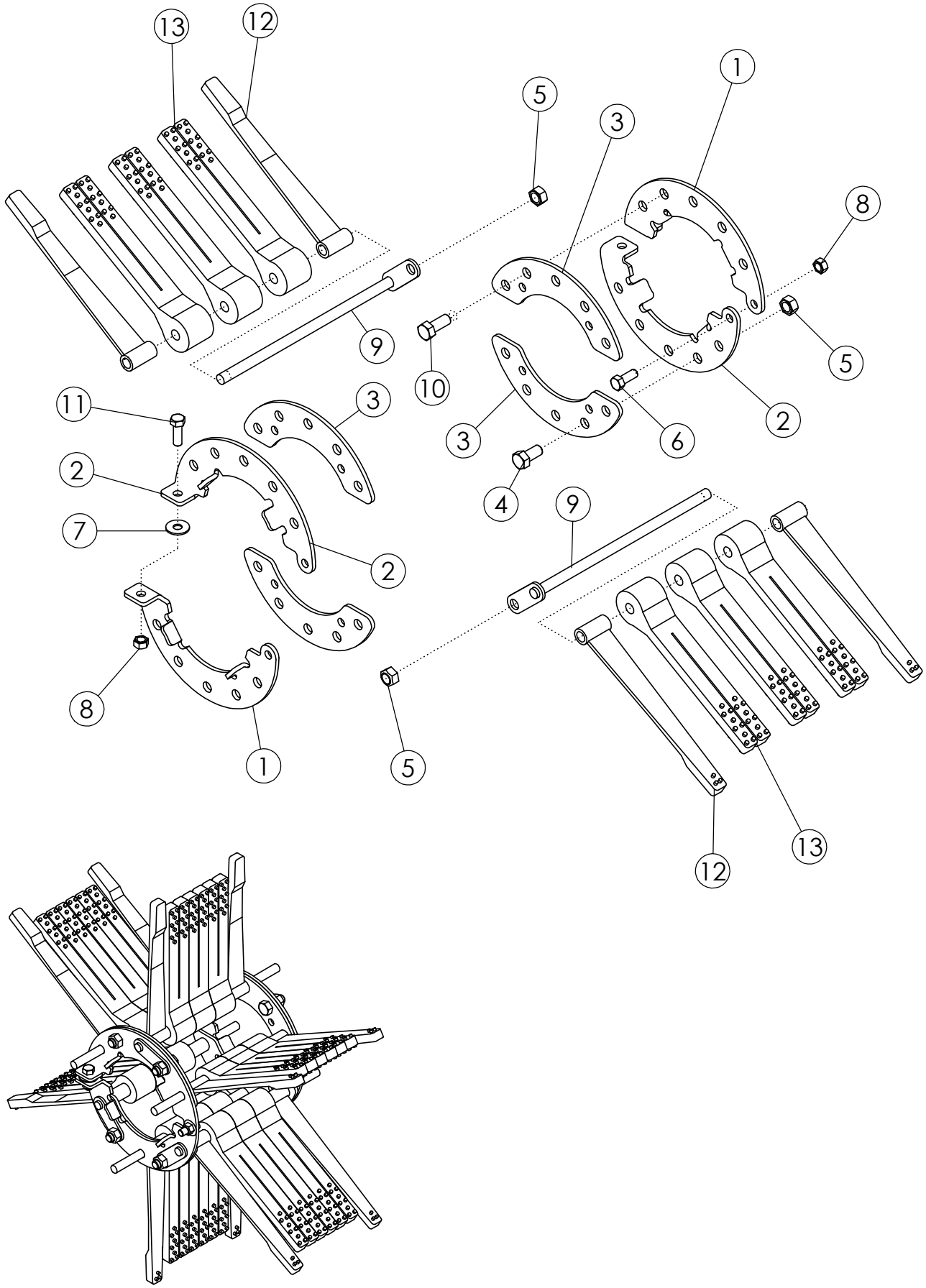
13
12
1
5
3
8
9
10
5
11
3
2
3
6
2
4
7
9
2
8
1
5
12
13

FLAILS ON #3 DRUM

ITEM	PART NO.	DESCRIPTION	QTY
1	52062	FLAIL RING-LH	2
2	52061	FLAIL RING-RH	2
3	58084	PLATE-REINFORCEMENT ZP	4
4	1032509	BOLT-HEX: .63 X 1.25 NC GR5 ZP	2
5	1016595	NUT-TOPLOCK: .63 NC GR5 ZP	8
6	1011606	BOLT-HEX: .50 X 1.25 NC GR5 ZP	2
7	1014443	WASHER-FLAT: .50 ZP	2
8	1027461	NUT-TOPLOCK: .50 NC GR5 ZP	4
9	305557	FLAIL ROD	6
10	1014349	BOLT-HEX: .63 X 1.50 NC GR5 ZP	6
11	1011607	BOLT-HEX: .50 X 1.50 NC GR5 ZP	2
12	52355	FLAIL-SWEEP 1 X 13-1/4	12
13	58255	FLAIL-SPLIT TAPER 2 X 12	18
	52356	FLAIL-STUDDED 1 X 12	18

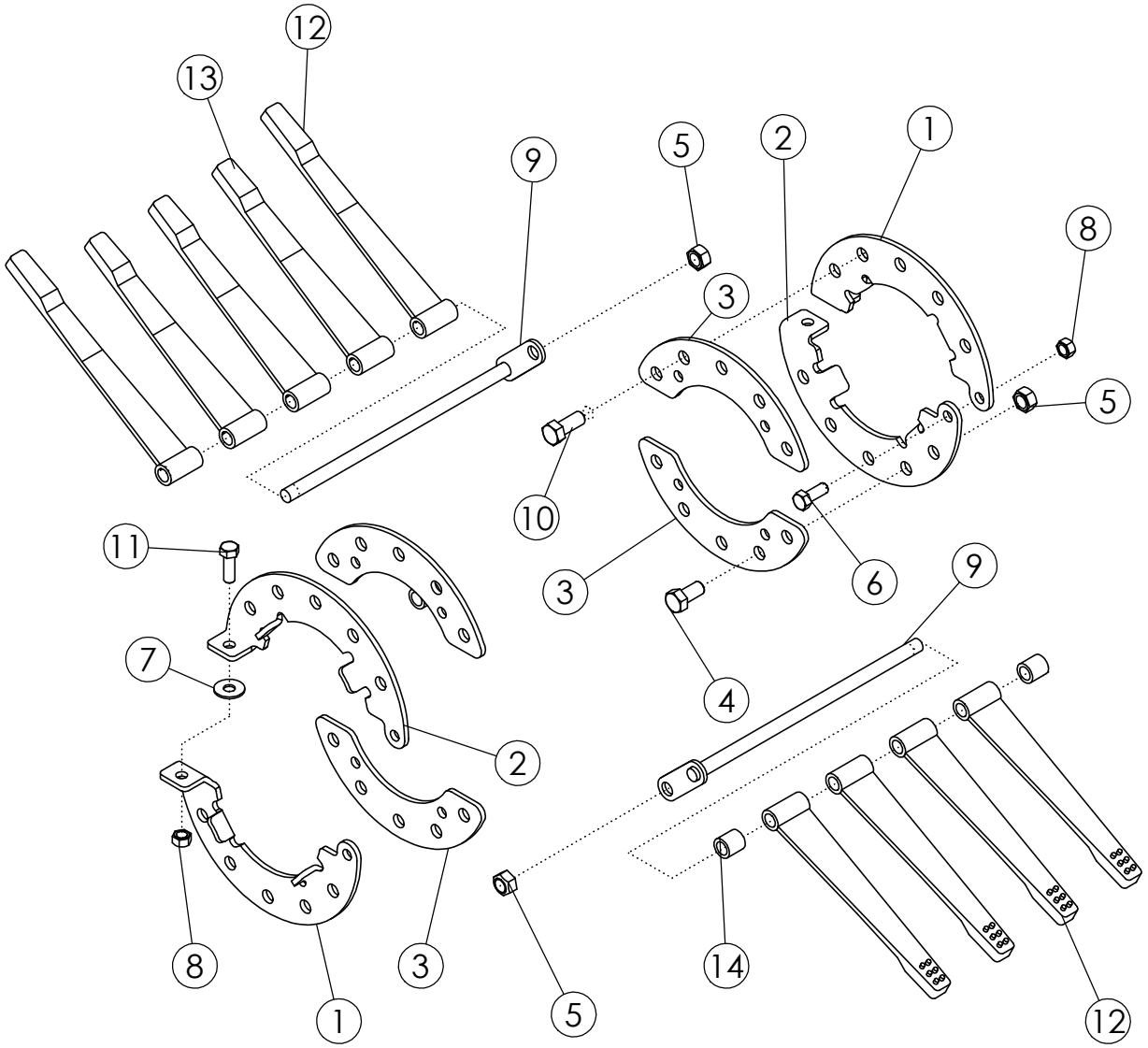
12
13
9
5
2
1
8
3
5
10
6
11
3
9
7
4
2
8
3
14
1
5
12

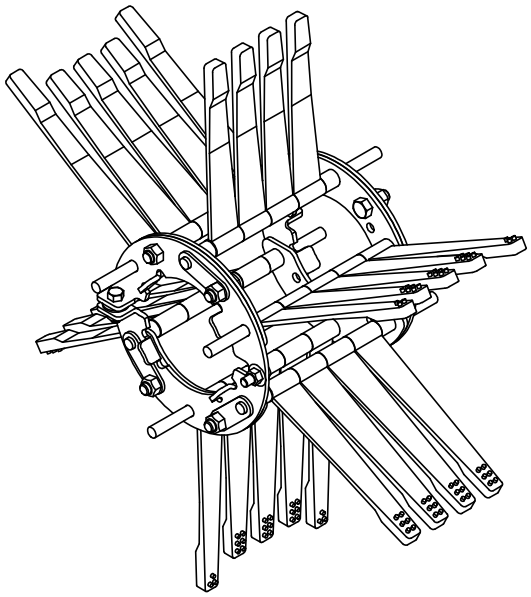

FLAILS ON #3 DRUM

ITEM	PART NO.	DESCRIPTION	QTY
1	52062	FLAIL RING-LH	2
2	52061	FLAIL RING-RH	2
3	58084	PLATE-REINFORCEMENT ZP	4
4	1032509	BOLT-HEX: .63 X 1.25 NC GR5 ZP	2
5	1016595	NUT-TOPLOCK: .63 NC GR5 ZP	8
6	1011606	BOLT-HEX: .50 X 1.25 NC GR5 ZP	2
7	1014443	WASHER-FLAT: .50 ZP	2
8	1027461	NUT-TOPLOCK: .50 NC GR5 ZP	4
9	305557	FLAIL ROD	6
10	1014349	BOLT-HEX: .63 X 1.50 NC GR5 ZP	6
11	1011607	BOLT-HEX: .50 X 1.50 NC GR5 ZP	2
12	52355	FLAIL-SWEEP 1 X 13-1/4	6
13	52354	FLAIL-RUBBER 1 X 12 (PREMIER)	21
14	51548	SPACER 1"	6

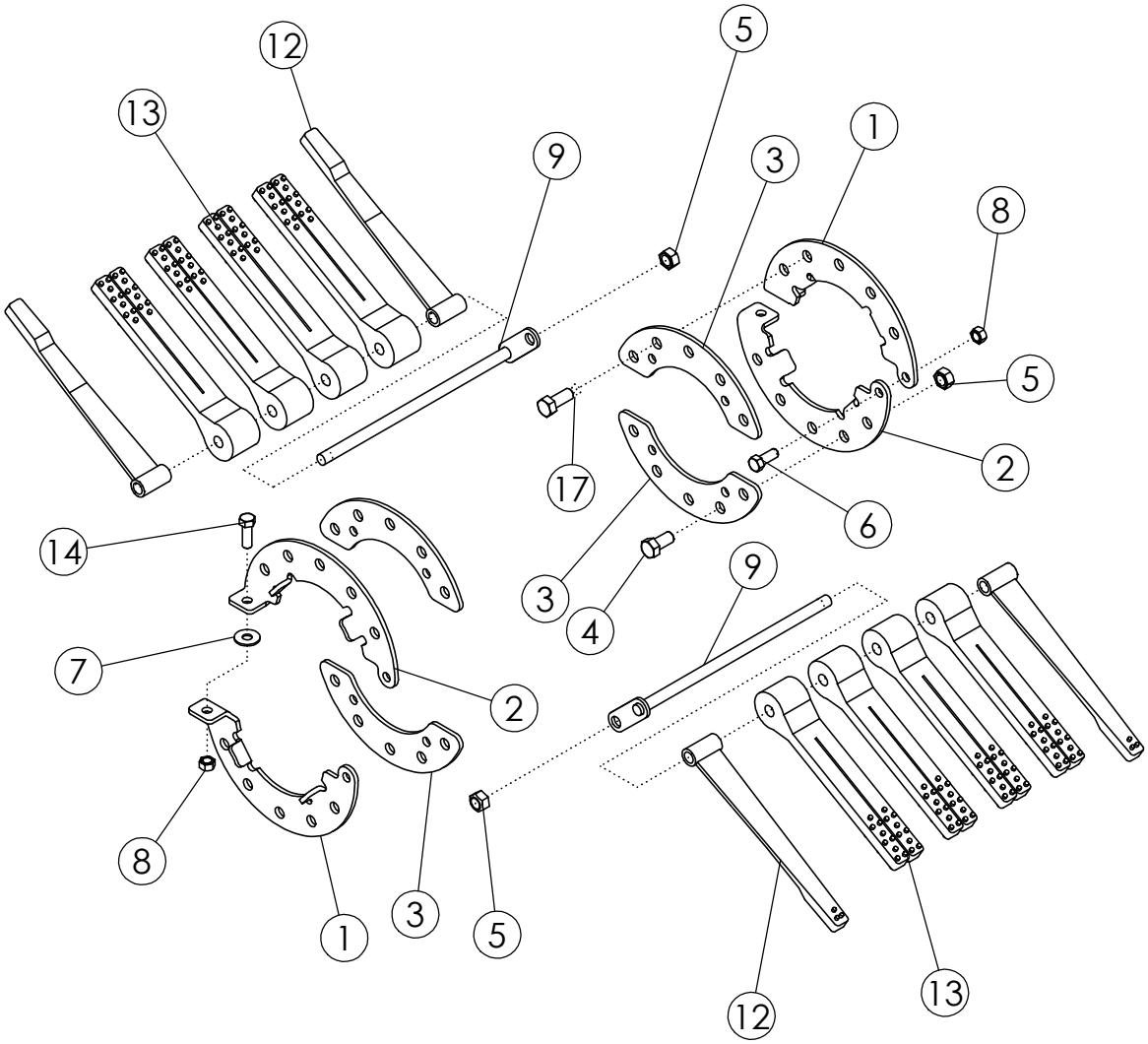
12
13
5
9
3
1
8
5
17
2
6
14
3
4
9
7
2
8
1
3
5
12
13

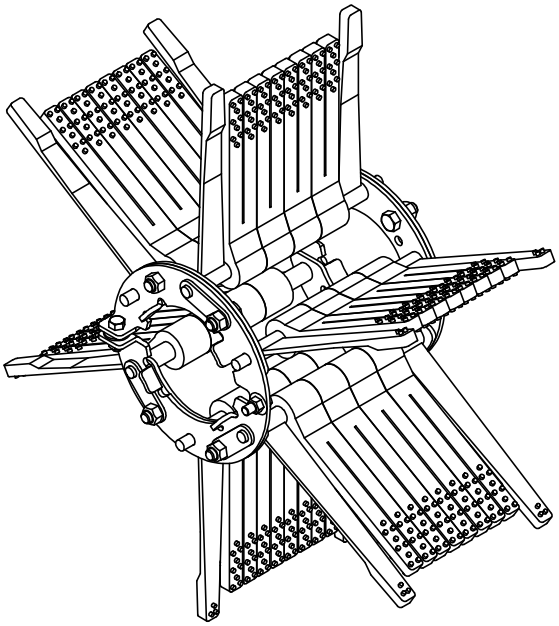

FLAILS ON #3 DRUM 30" SPACING #52128			
ITEM	**PART NO.**	**DESCRIPTION**	**QTY**
1	52062	FLAIL RING-LH	2
2	52061	FLAIL RING-RH	2
3	58084	PLATE-REINFORCEMENT ZP	4
4	1032509	BOLT-HEX: .63 X 1.25 NC GR5 ZP	2
5	1016595	NUT-TOPLOCK: .63 NC GR5 ZP	8
6	1011606	BOLT-HEX: .50 X 1.25 NC GR5 ZP	2
7	1014443	WASHER-FLAT: .50 ZP	2
8	1027461	NUT-TOPLOCK: .50 NC GR5 ZP	4
9	305557	FLAIL ROD	6
10	1011623	BOLT-HEX: .63 X 2.00 NC GR5 ZP	6
11	1013024	WASHER-FLAT: .63 ZP	6
12	52355	FLAIL-SWEEP 1 X 13-1/4	12
13	58255	FLAIL-SPLIT TAPER 2 X 12	24
	52354	FLAIL-RUBBER 1 X 12	
14	1011607	BOLT-HEX: .50 X 1.50 NC GR5 ZP	2

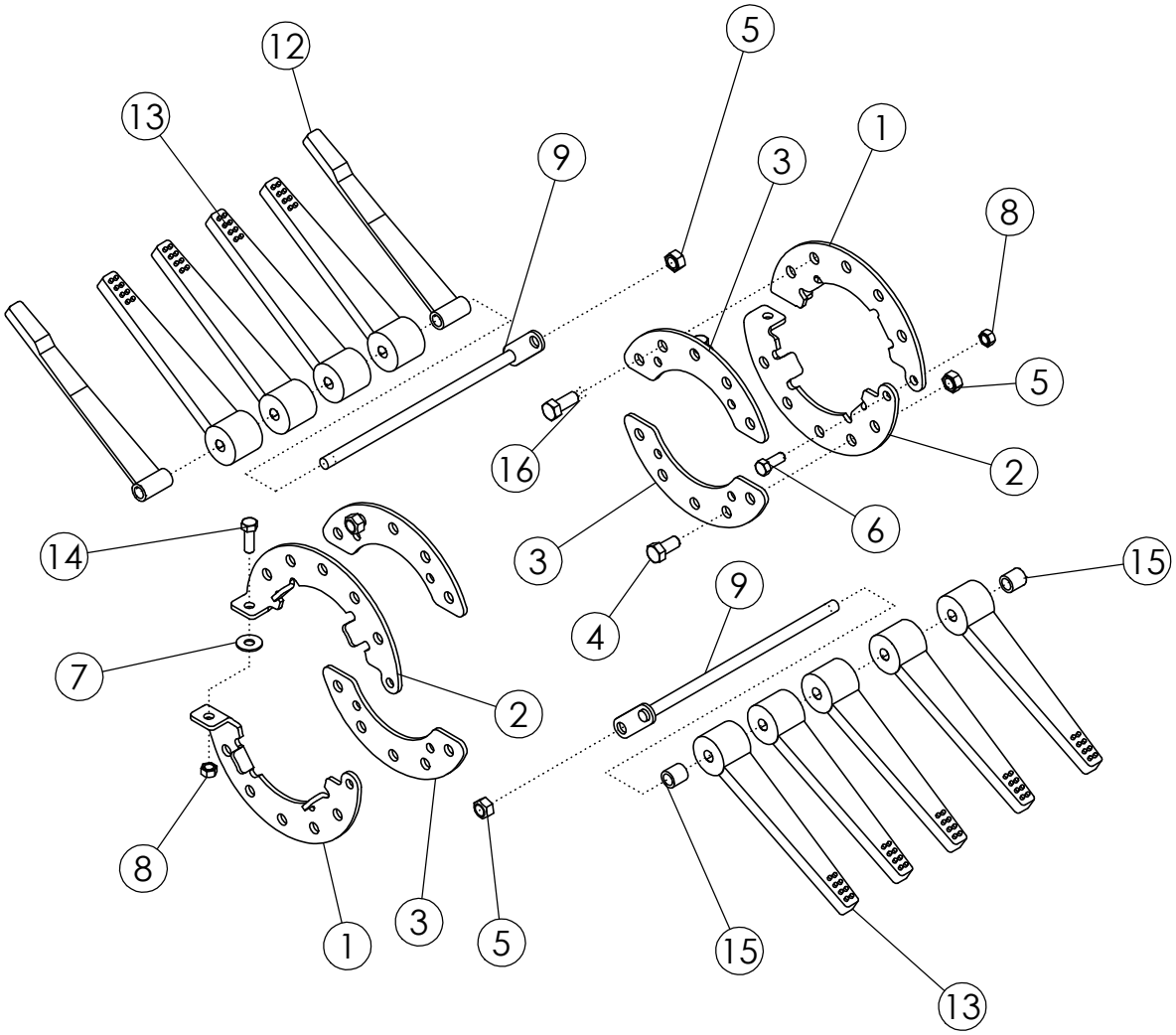
12
5
13
9
3
1
8
5
16
2
6
3
14
4
9
15
7
2
8
1
3
5
15
13

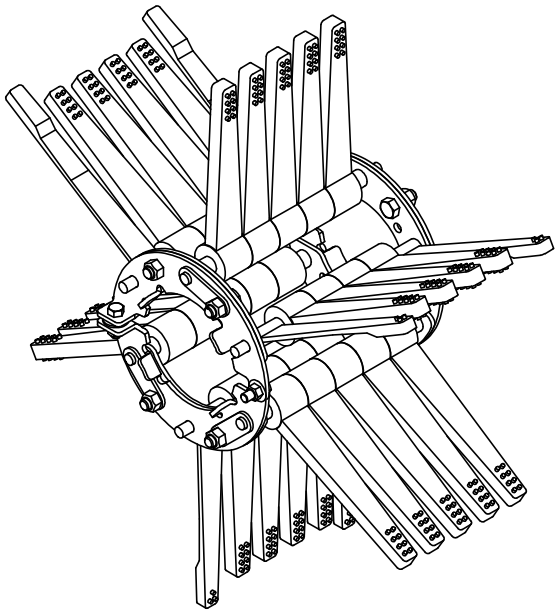

FLAILS ON #3 DRUM 30" SPACING			
ITEM	**PART NO.**	**DESCRIPTION**	**QTY**
1	52062	FLAIL RING-LH	2
2	52061	FLAIL RING-RH	2
3	58084	PLATE-REINFORCEMENT ZP	4
4	1032509	BOLT-HEX: .63 X 1.25 NC GR5 ZP	2
5	1016595	NUT-TOPLOCK: .63 NC GR5 ZP	8
6	1011606	BOLT-HEX: .50 X 1.25 NC GR5 ZP	2
7	1014443	WASHER-FLAT: .50 ZP	2
8	1027461	NUT-TOPLOCK: .50 NC GR5 ZP	4
9	305557	FLAIL ROD	6
10	1011623	BOLT-HEX: .63 X 2.00 NC GR5 ZP	6
11	1013024	WASHER-FLAT: .63 ZP	6
12	52355	FLAIL-SWEEP 1 X 13-1/4	12
13	52354	FLAIL-RUBBER 1 X 12	27
	52356	FLAIL-STUDED 1 X 12	
14	1011607	BOLT-HEX: .50 X 1.50 NC GR5 ZP	2
15	51549	SPACER 1"	6

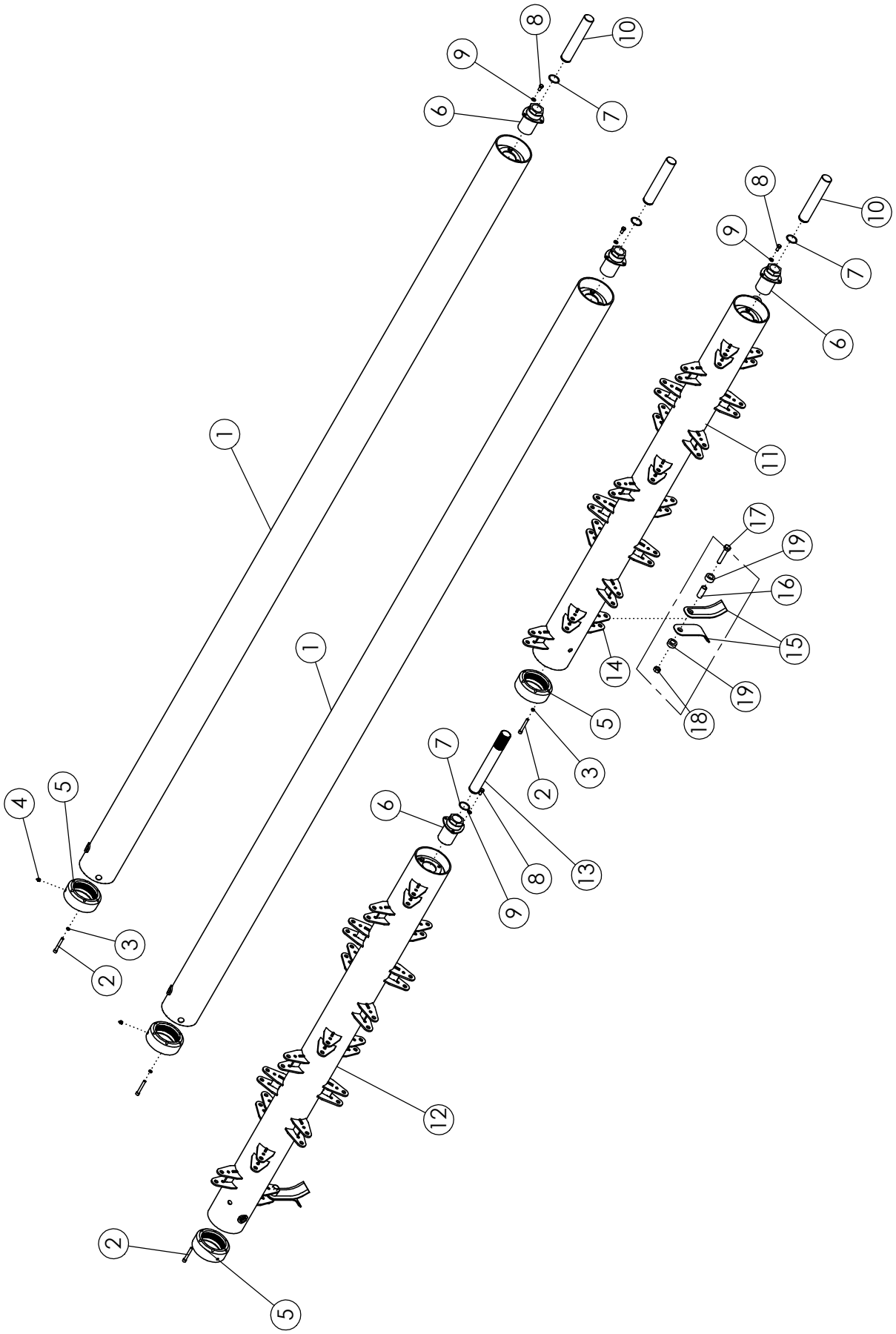
1
1
2
3
4
5
6
7
8
9
10
11
12
13
14
15
16
17
18
19

FLAIL TUBE ASSEMBLY

ITEM	PART NO.	DESCRIPTION	QTY
1	68490*	FLAIL TUBE - 0822 TT	2
2	68417	SCREW: S-H-CAP .38 X 2.75 NC	24
3	68418	WASHER-LOCK: .38 HIGH COLLAR	24
4	1030766	ZERK-GREASE: .13 NPT	4
5	68412	DRIVE SLEEVE	4
6	64163	TRANTORQUE: 1.750" X 3.375"	4
7	64184	RING-RETAINING 1.750"	4
8	1011599	BOLT-HEX: .38 X .75 NC GR5 ZP	12
9	1011586	WASHER-LOCK: .38 ZP	12
10	68445	SHAFT-IDLER	3
11	68611	ASSY-STEEL DRUM LH 0822	1
	68626	ASSY-STL CUP DRM LH 0822	
	305875	ASSY-STL DRUM LH 630 HS	
12	68618	ASSY-STEEL DRUM RH 0822	1
	68632	ASSY-STL CUP DRM RH 0822	
	305874	ASSY-STL DRUM RH 630 HS	
13	68442	SHAFT-SPLINED COUPLING	1
		OPTIONAL L-KNIFE	
14	68400	WLDMT-FLAIL HOLDER	40
15	58680	FLAIL-STEEL	80
	69199	FLAIL-STEEL LONG (NOT SHOWN)	
16	68427	BUSHING-L KNIFE	40
	305152	BUSHING-L KNIFE LONG	
17	65825	BOLT-HEX: .63 X 3.25 NC GR5 ZP	40
18	1016595	NUT-TOPLOCK: .63 NC GR5 ZP	40
19	68426	SPACER- L KNIFE	80
	305153	SPACER- L KNIFE LONG	

* QUANTITY OF 3 ON A NON-STEEL FRONT DRUM

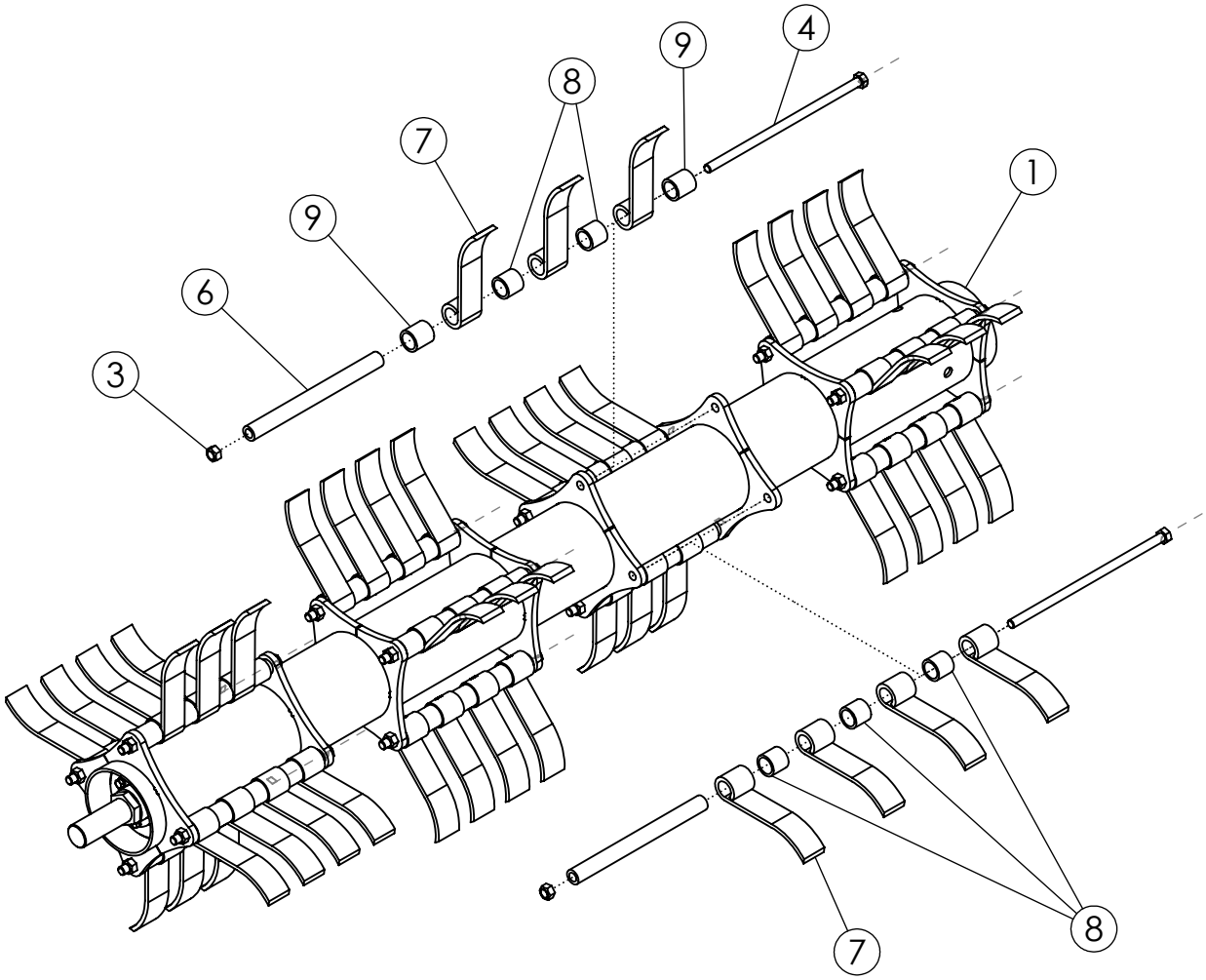
4
9
8
7
1
9
6
3
7
8

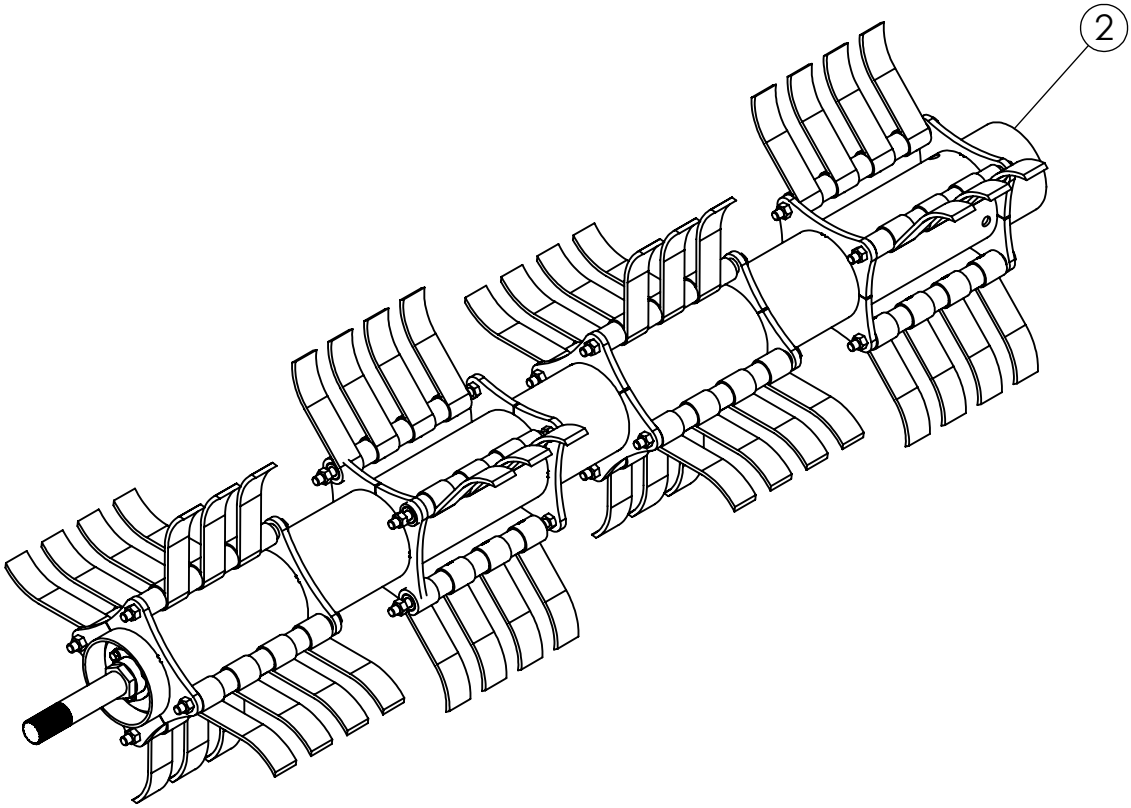
2

STEEL FLAIL ASSEMBLY (306858)			
ITEM	**PART NO.**	**DESCRIPTION**	**QTY**
1	306918	ASSY-DRUM CUP 6.63"-1.25"EYE 4-PIN 8R22 LH BAL	1
2	306925	ASSY-DRUM CUP 6.63"-1.25"EYE 4-PIN 8R22 RH BAL	1
3	1016595	NUT-TOPLOCK: .63 NC GR5 ZP	16
4	306766	BOLT-HEX: .63 X14.87 NC GR8 ZP	16
5	1013024	WASHER-FLAT: .63 ZP	16
6	307388	BUSHING-FLAIL 12.688" 1.13" OD HT	16
7	307386	FLAIL-CUP 8.0" 1.25" EYE	56
8	307390	SPACER 1.45" LARGE - 1.25" EYE	40
9	307391	SPACER 1.70" LARGE - 1.25" EYE	16

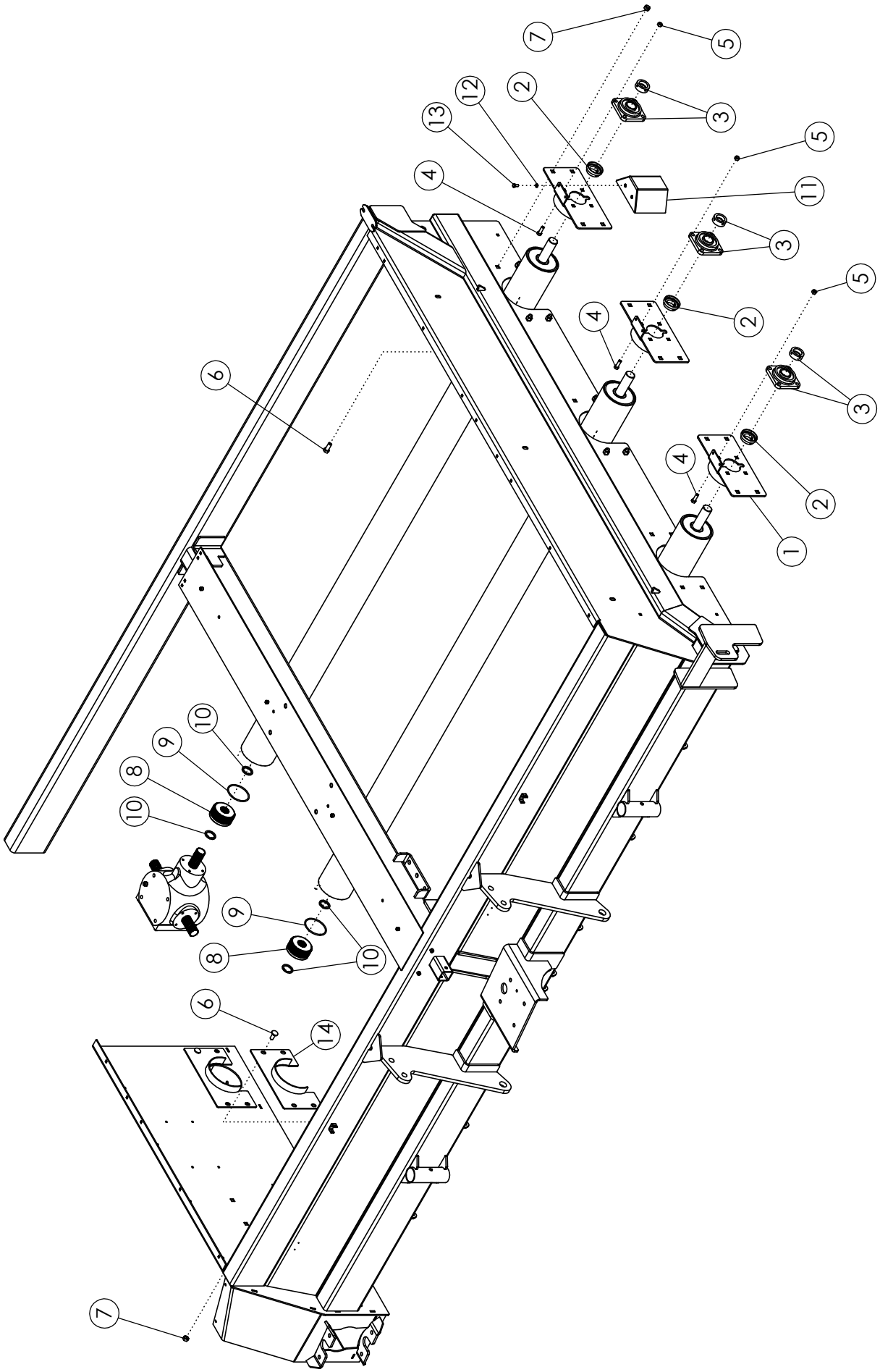
7
5
3
2
12
13
4
11
6
1
10
9
8
14

FLAIL TUBE MOUNTING

ITEM	PART NO.	DESCRIPTION	QTY
1	68244	WLDMT-BEARING PLATE	3
2	52382	SEAL PROTECTOR 1.75	3
3	52404	BEARING-FLANGE 1.75	3
4	1011660	BOLT-CRG: .50 X 1.50 NC GR5 ZP	12
5	1027461	NUT-TOPLOCK: .50 NC GR5 ZP	12
6	72063	BOLT-CRG: .63 X 1.50 NC GR5 ZP	24
7	1016595	NUT-TOPLOCK: .63 NC GR5 ZP	24
8	68413	COUPLER-DRIVE	3
9	68414	O-RING 70 BUNA	3
10	68415	SNAP RING	6
11	68462	WLDMT-IDLER SHIELD	3
12	1011586	WASHER-LOCK: .38 ZP	6
13	1011599	BOLT-HEX: .38 X .75 NC GR5 ZP	6
14	51809	WLDMT-SHIELD ANTI-WRAP	3

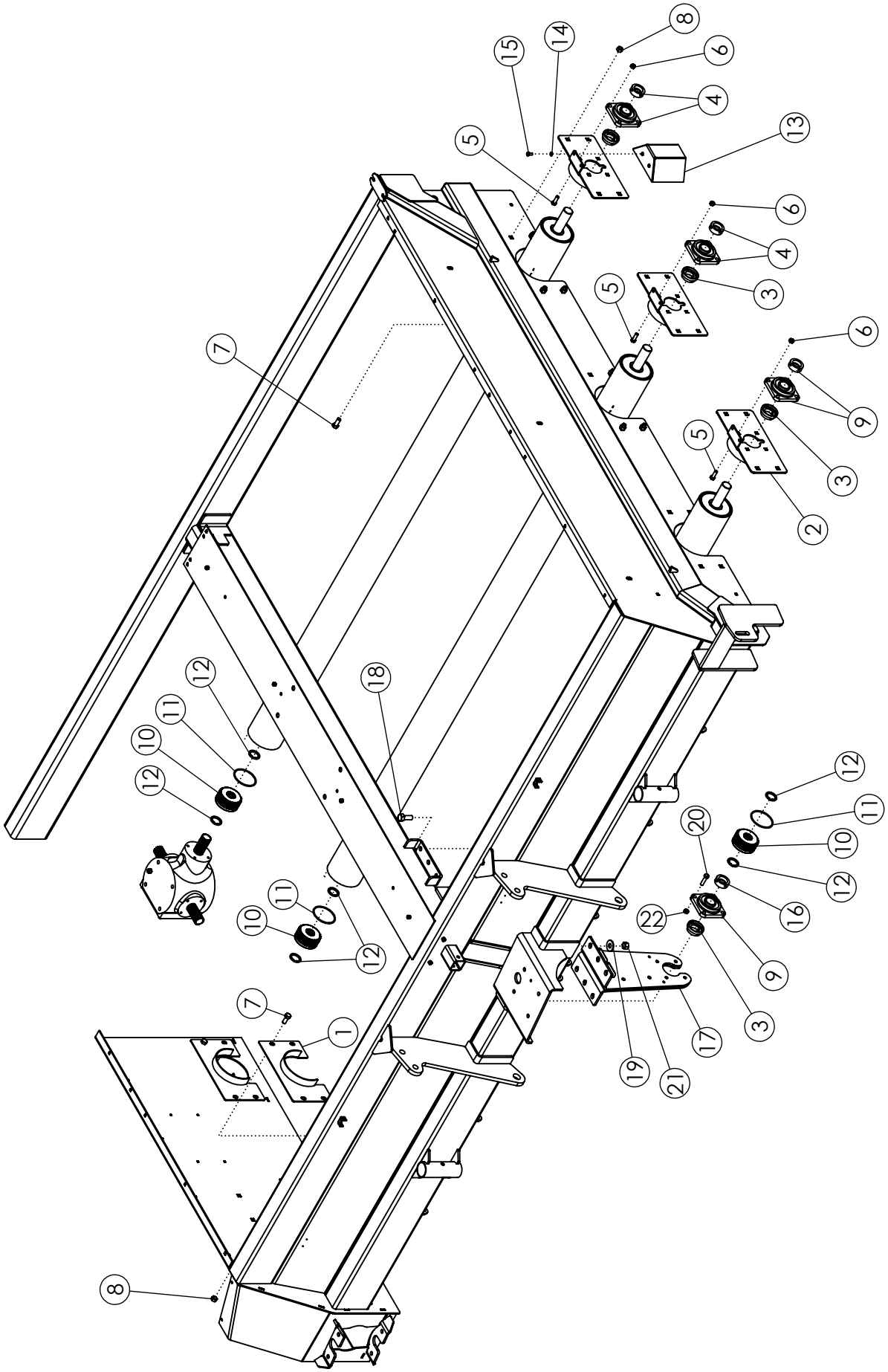
8
6
4
13
15
14
5
6
4
3
5
6
9
3
5
2
7
12
11
10
12
18
12
11
10
12
20
16
22
9
3
17
19
21
11
10
12
7
1
8

FLAIL TUBE MOUNTING - STEEL FRONT TUBE OPTION

ITEM	PART NO.	DESCRIPTION	QTY
1	51809	WLDMT - SHIELD ANTI WRAP NARROW	3
2	68244	WLDMT-BEARING PLATE	3
3	52382	SEAL PROTECTOR 1.75	4
4	52404	BEARING-FLANGE 1.75	2
5	1011660	BOLT-CRG: .50 X 1.50 NC GR5 ZP	12
6	1027461	NUT-TOPLOCK: .50 NC GR5 ZP	12
7	72063	BOLT-CRG: .63 X 1.50 NC GR5 ZP	24
8	1016595	NUT-TOPLOCK: .63 NC GR5 ZP	24
9	306999	ASSY-BEARING-FLANGE 1-3/4" N-SEAL (STEEL)	2
10	68413	COUPLER-DRIVE	4
11	68414	O-RING 70 BUNA	4
12	68415	SNAP RING	8
13	68462	WLDMT-IDLER SHIELD	3
14	1011586	WASHER-LOCK: .38 GR5 ZP	6
15	1011599	BOLT-HEX: .38 X .75 NC GR5 ZP	6
16	52383*	LOCK PROTECTOR 1.75	1
17	68634	WLDMT-HANGER BOLT-ON	1
18	1012060	BOLT-HEX: .75 X 2.00 NC GR5 ZP	6
19	1030702	WASHER-FLAT: .75 ZP	6
20	62147	BOLT-HEX: .50 X 2.00 NC GR8 ZP	4
21	1017000	NUT-TOPLOCK: .75 NC GR5 ZP	6
22	36233	NUT-TOPLOCK: .50 NC GR8 ZP	4

* Replaces lock collar provided with bearing for the center

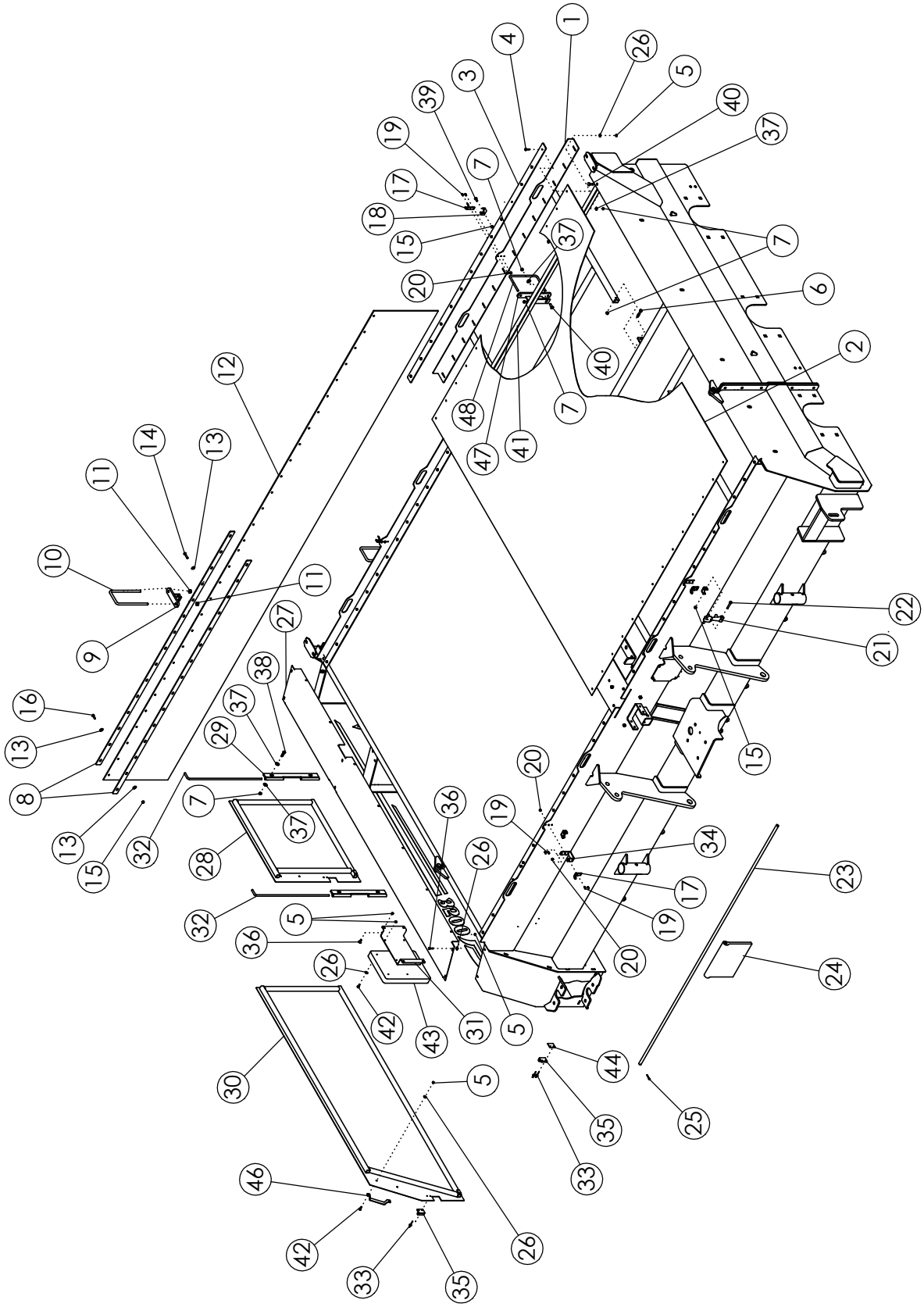
1
2
3
4
5
6
7
8
9
10
11
12
13
14
15
16
17
18
19
20
21
22
23
24
25
26
27
28
29
30
31
32
33
34
35
36
37
38
39
40
41
42
43
44
46
47
48

DOORS AND SHIELDS

ITEM	PART NO	DESCRIPTION	QTY
1	63148	WLDMT-DOOR	4
2	63147	TARP	2
3	63149	BRACKET-TOP STL DEF COVER	4
4	1011595	BOLT-HEX: .25 X .75 NC GR5 ZP	56
5	1030946	NUT-TOPLOCK: .25 NC GR5 ZP	81
6	1011725	BOLT-HEX: .38 X 2.00 NC GR5 ZP	8
7	1016999	NUT-TOPLOCK: .38 NC GR5 ZP	24
8	63447	BAR-REAR FLAP	4
9	63448	WLDMT-REAR FLAP MOUNT	4
10	63458	U-BOLT: .50 X 9.25 X 4.00 X 9.25 ZP	4
11	1027461	NUT-TOPLOCK: .50 NC GR5 ZP	8
12	52358	FLAP-REAR	1
13	1011583	WASHER-FLAT: .31 ZP	60
14	1013424	BOLT-HEX: .31 X 1.75 NC GR5 ZP	4
15	1030700	NUT-TOPLOCK: .31 NC GR5 ZP	36
16	1011598	BOLT-HEX: .31 X 1.00 NC GR5 ZP	26
17	52239	HOOD BRACKET-LARGE	4
18	52237	ANCHOR BRACKET-LARGE	2
19	1013462	SCREW-R-H-SL: .19 X .50 NC GR2	12
20	1026591	NUT-K-LOCK: .19 NC GR2 ZP	12
21	52238	RUBBER HOOK-LARGE	4
22	1011285	BOLT-HEX: .31 X 2.00 NC GR5 ZP	4
23	64701	SHAFT-RETAINING SHIELD	2
24	64648	FLAP-RUBBER WR	14
25	1012375	PIN-COTTER: .19 X 1.50 ZP	4
26	1020416	WASHER-FLAT: .25 ZP	77
27	68201	PANEL-TOP SHIELD	1
28	68386	WLDMT-REAR SIDE DOOR	1
29	72680	WLDMT-DOOR HINGE	2
30	68387	WLDMT-FRONT SIDE DOOR	1
31	68324	PLATE-DEF MANUAL CASE	1
32	51303	DOOR HINGE ROD ZP	2
33	1011974	RIVET-POP: .19 X .531 ZP	8
34	68320	TARP BRACKET	2
35	69140	WLDMT-DOOR LATCH ZP	4
36	68602	BOLT-CRG: .25 X .75 NC GR5 ZP	17
37	1011828	WASHER-FLAT: .38 ZP	16
38	1011601	BOLT-HEX: .38 X 1.25 NC GR5 ZP	4
39	1011597	BOLT-HEX: .31 X .75 NC GR5 ZP	2
40	1016362	BOLT-CRG: .38 X 1.00 NC GR5 ZP	8

CONTINUED

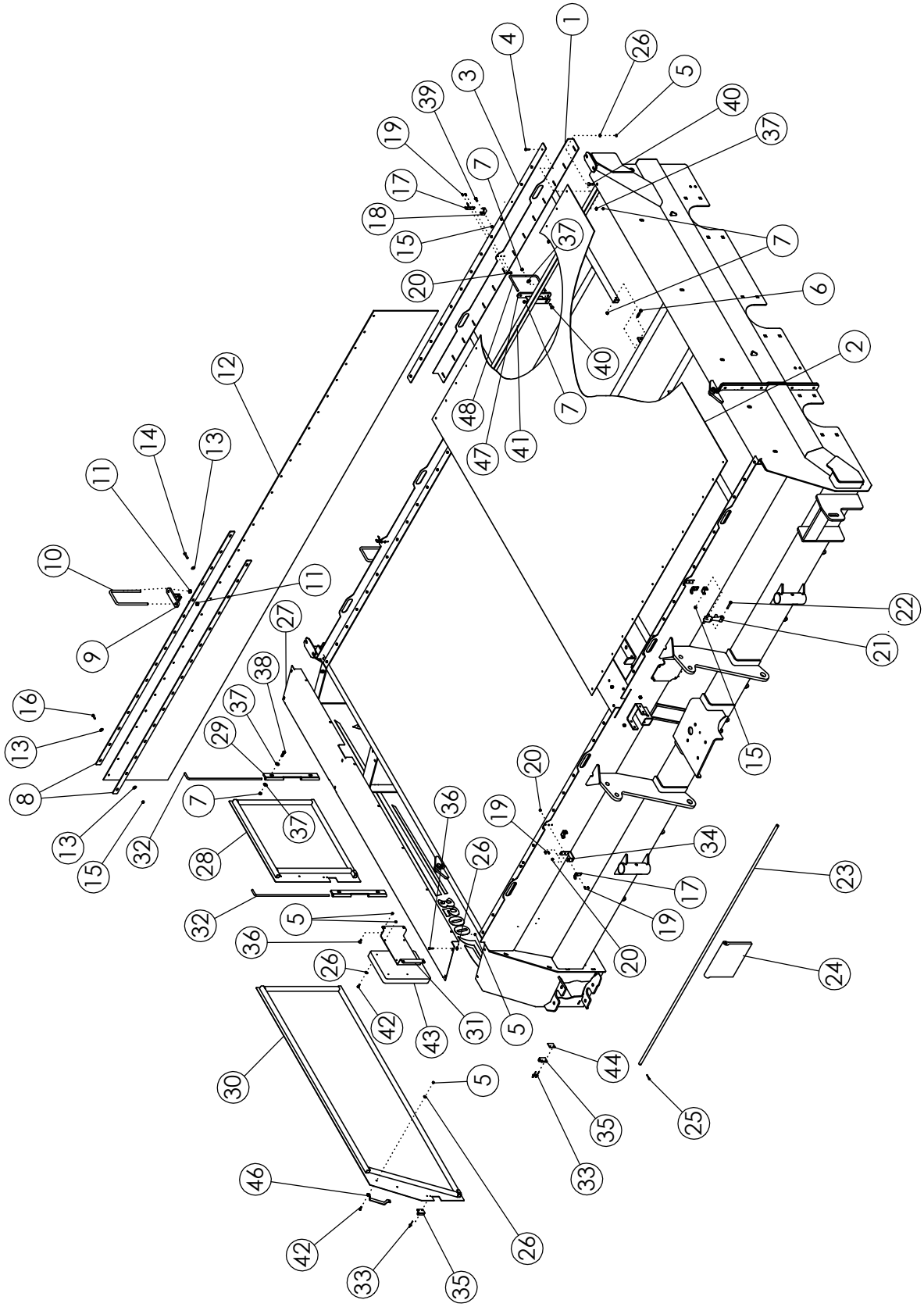
1
2
3
4
5
6
7
8
9
10
11
12
13
14
15
16
17
18
19
20
21
22
23
24
25
26
27
28
29
30
31
32
33
34
35
36
37
38
39
40
41
42
43
44
46
47
48

DOORS AND SHIELDS (CONTINUED)			
ITEM	**PART NO.**	**DESCRIPTION**	**QTY**
41	68968	PLATE-DOOR CROSS 8R LH	1
	68969	PLATE-DOOR CROSS 8R RH (NOT SHOWN)	1
42	1011595	BOLT-HEX: .25 X .75 NC GR5 ZP	8
43	64635	CASE-MANUAL STORAGE	1
44	69141	PLATE-DOOR LATCH SPACER ZP	2
45	51304	DOOR-LOCK ZP	2
46	68715	HANDLE-GRAB DOOR	2
47	69111	WLDMT-DOOR SUPPORT	2
48	64244	U-BOLT: .38 X 5.13 X 8.00 X 5.13	2

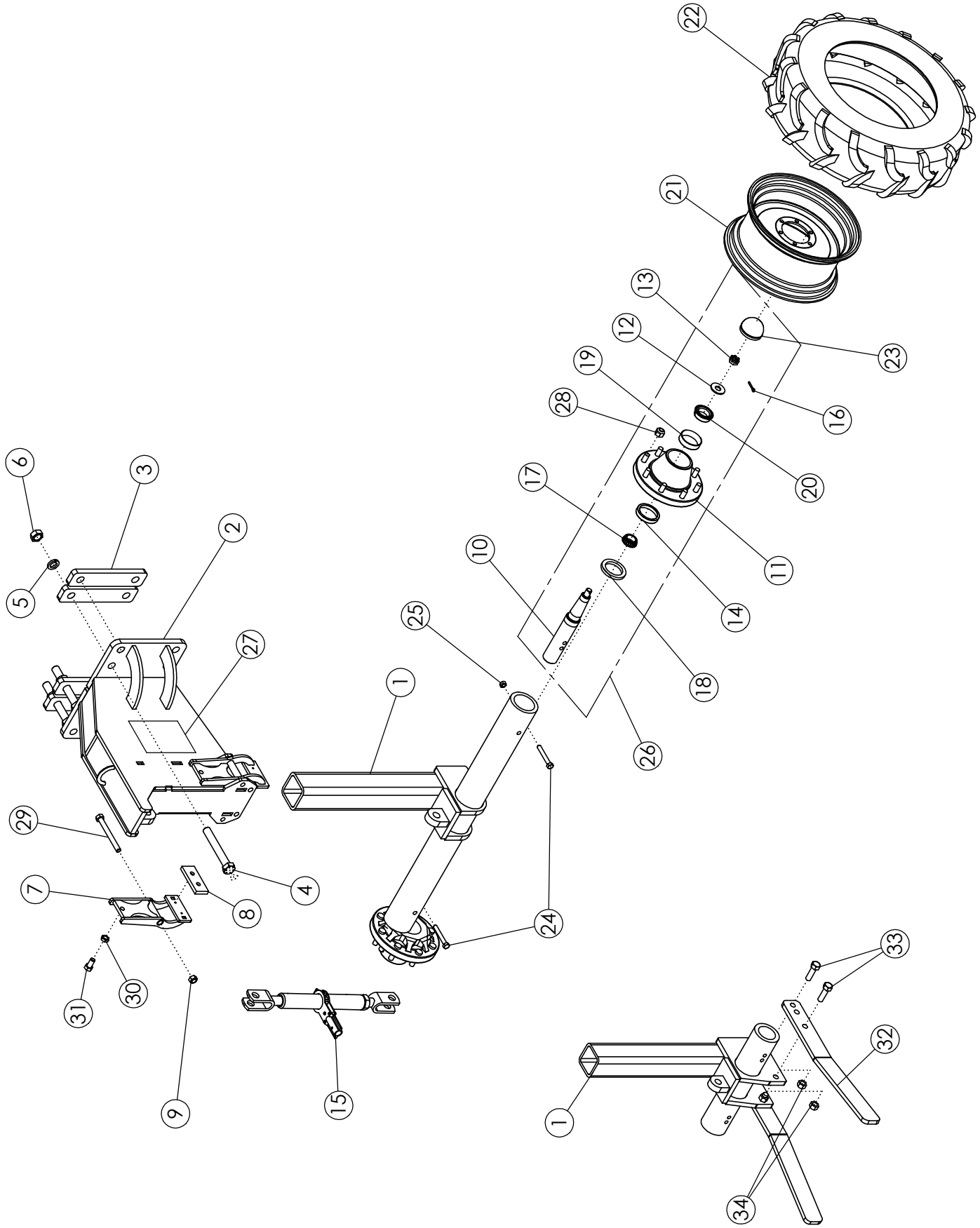
22
21
13
12
19
28
23
16
20
17
11
10
14
25
18
1
26
6
3
2
5
27
29
4
7
8
24
33
31
30
32
9
15
1
34

STANDARD REAR STRUTS - 11.2 X 24 TIRES

ITEM	PART NO.	DESCRIPTION	QTY
1	68331	WLDMT-SPINDLE HOUSING (44")	1
	68236	WLDMT-SPINDLE HOUSING (NARROW)	1
	68766	WLDMT-SPINDLE HOUSING- 6" OFFSET RH	1
	68767	WLDMT-SPINDLE HOUSING- 6" OFFSET LH	1
	69434	ASSY-OSC SPINDLE HOUSING (44")	1
2	68332	WLDMT-STD STRUT UPPER	1
3	58408	BAR - BOLTING	4
4	1018839	BOLT-HEX: 1.00 X 7.00 NC GR8 ZP	8
5	1013539	WASHER-LOCK: 1.00 ZP	8
6	1012664	NUT-HEX: 1.00 NC GR2 ZP	8
7	69956	WLDMT- DEF STRUT CLAMP	2
8	69971	PLASTIC-STRUT CLAMP	2
9	1016595	NUT-TOPLOCK: .63 NC GR5 ZP	2
10	52954*	SPINDLE	2
11	53623*	HUB-WHEEL 8-BOLT	2
12	1030728*	WASHER-FLAT: .SAE 1.000 ZP	2
13	1030726*	NUT-SPINDLE: 1.00 NF	2
14	53622*	BEARING CUP INNER	2
15	52407	RATCHET JACK-PAINTED	1
16	1030797*	PIN-COTTER: .19 X 1.75 NP	2
17	53621*	BEARING CONE INNER	2
18	53619*	SEAL	2
19	52243*	BEARING CUP OUTER	2
20	53620*	BEARING CONE OUTER	2
21	56903	WHEEL W10 X 24 8 BOLT	2
22	56976	TIRE 11.2-24 10 PLY R1	2
	68973	TUBE-REPAIR 11.2-24 (NOT SHOWN)	AR
23	53624*	CAP-HUB	2
24	1011618	BOLT-HEX: .50 X 5.00 NC GR5 ZP	2
25	1027461	NUT-TOPLOCK: .50 NC GR5 ZP	2
26	53167	ASSY HUB & SPINDLE	2
27	52248	DECAL-CAUTION	1
28	53625*	NUT-WHEEL: .63-18NF	16
29	1013068	BOLT-HEX .63 X 6.00 NC GR5 ZP	2
30	66336	NUT-JAM: .63 NF GR2 ZP	2
31	1030703	BOLT-HEX: .63 X 1.25 NF GR5 ZP	2
32	305640	PLATE-SCRAPER 11.2-24 DEF	2
33	1016598	BOLT- .75 X 2.50 NC GR5 ZP	4
34	1017000	NUT-TOPLOCK: .75 NC GR5 ZP	4

* Items are included in Item 26

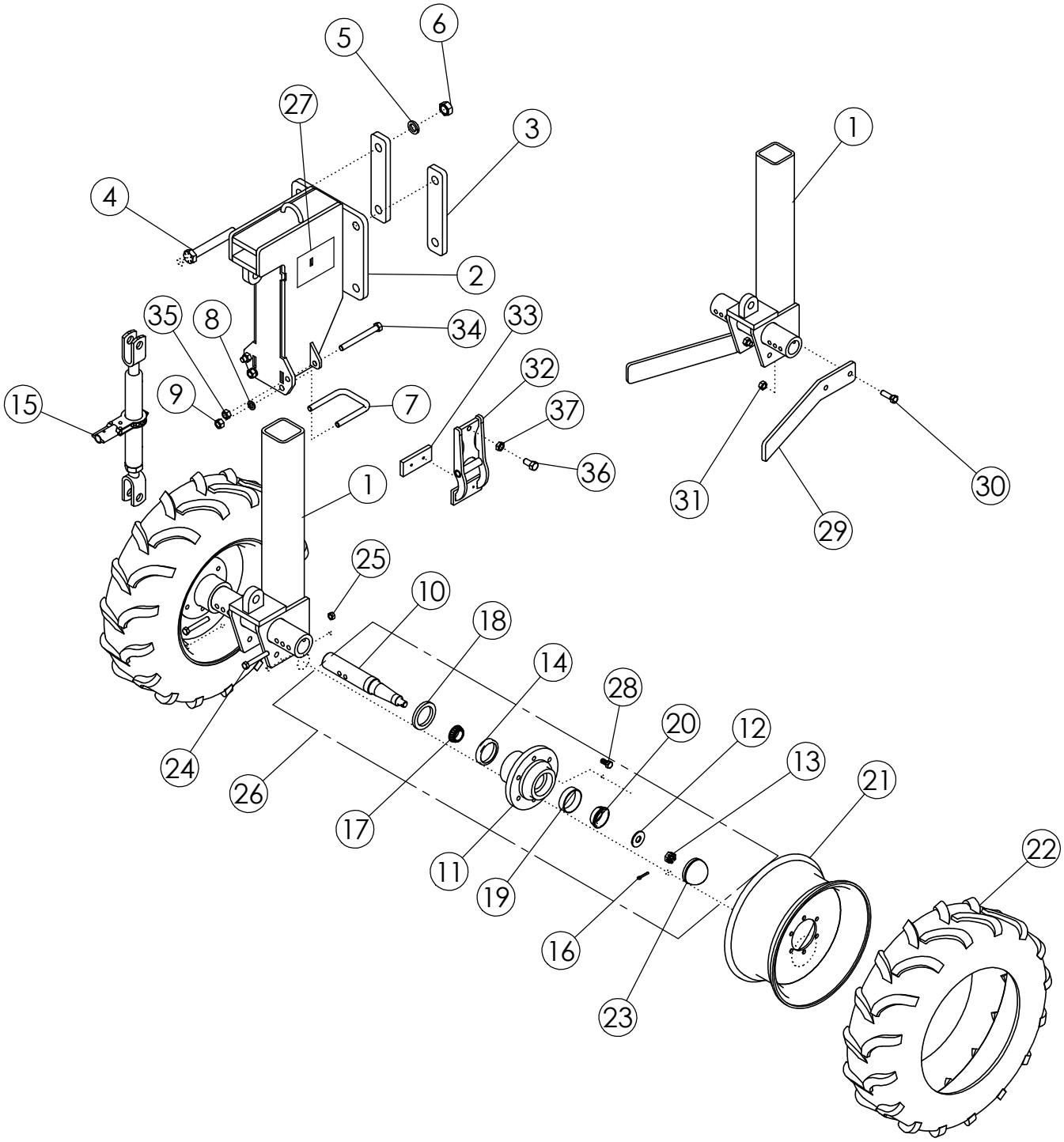
5
6
27
3
1
4
2
35
8
34
33
32
15
9
7
37
36
1
31
30
29
25
10
18
14
28
20
12
13
21
24
26
17
11
19
22
16
23

STANDARD REAR STRUTS - 7.60 X 15 TIRES

ITEM	PART NO.	DESCRIPTION	QTY
1	58281	WLDMT-SPINDLE HOUSING	1
	64402	WLDMT-SPINDLE HOUSING- 6" OFFSET RH	1
	64406	WLDMT-SPINDLE HOUSING- 6" OFFSET LH	1
2	63559	WLDMT-STD STRUT UPPER	1
3	58408	BAR - BOLTING	2
4	1018839	BOLT-HEX: 1.00 X 7.00 NC GR8 ZP	4
5	1013539	WASHER-LOCK: 1.00 ZP	4
6	1012664	NUT-HEX: 1.00 NC GR2 ZP	4
7	60547	U-BOLT: .63 X 5.25 X 4.00 X 5.25	1
8	1011813	WASHER-LOCK: .63 ZP	2
9	1011578	NUT-HEX: .63 NC GR2 ZP	2
10	52138*	SPINDLE	2
11	52247*	HUB-WHEEL 6-BOLT	2
12	1012377*	WASHER-SPINDLE: .81 X 2.00 NP	2
13	1012376*	NUT-SLOTTED: .75 NF GR5 NP	2
14	52243*	CUP-BEARING INNER	2
15	52407	RATCHET JACK-PAINTED	1
16	1012375*	PIN-COTTER: .19 X 1.50 NP	2
17	52245*	CONE-BEARING INNER	2
18	52242*	SEAL	2
19	52244*	CUP-BEARING OUTER	2
20	52246*	CONE-BEARING OUTER	2
21	52411	WHEEL 6.00-15 6 BOLT	2
22	52410	TIRE 7.60-15 I-3 6 PLY	2
	68974	TUBE-REPAIR 7.60-15 (NOT SHOWN)	AR
23	52241*	CAP-HUB	2
24	1011612	BOLT-HEX: .50 X 3.50 NC GR5 ZP	2
25	1027461	NUT-TOPLOCK: .50 NC GR5 ZP	2
26	52116	ASSY HUB & SPINDLE	2
27	52248	DECAL-CAUTION	1
28	1013426*	BOLT-LUG: .50 X 1.00 NF GR5 ZP	12
29	305642	PLATE-SCRAPER 7.6-15 DEF	2
30	1011623	BOLT-HEX: .63 X 2.00 NC GR5 ZP	4
31	1016595	NUT-TOPLOCK: .63 NC GR5 ZP	4
32	69956	WLDMT- DEF STRUT CLAMP	2
33	69971	PLASTIC-STRUT CLAMP	2
34	1013068	BOLT-HEX: .63 X 6.00 NC GR5 ZP	2
35	1016595	NUT-TOPLOCK: .63 NC GR5 ZP	2
36	1030703	BOLT-HEX: .63 X 1.25 NF GR5 ZP	2
37	66336	NUT-JAM: .63 NF GR2 ZP	2
38	69987	SCREW-MACH: FH-TORX .25-20 X 1.00 (NOT SHOWN)	4

* Items are included in Item 26

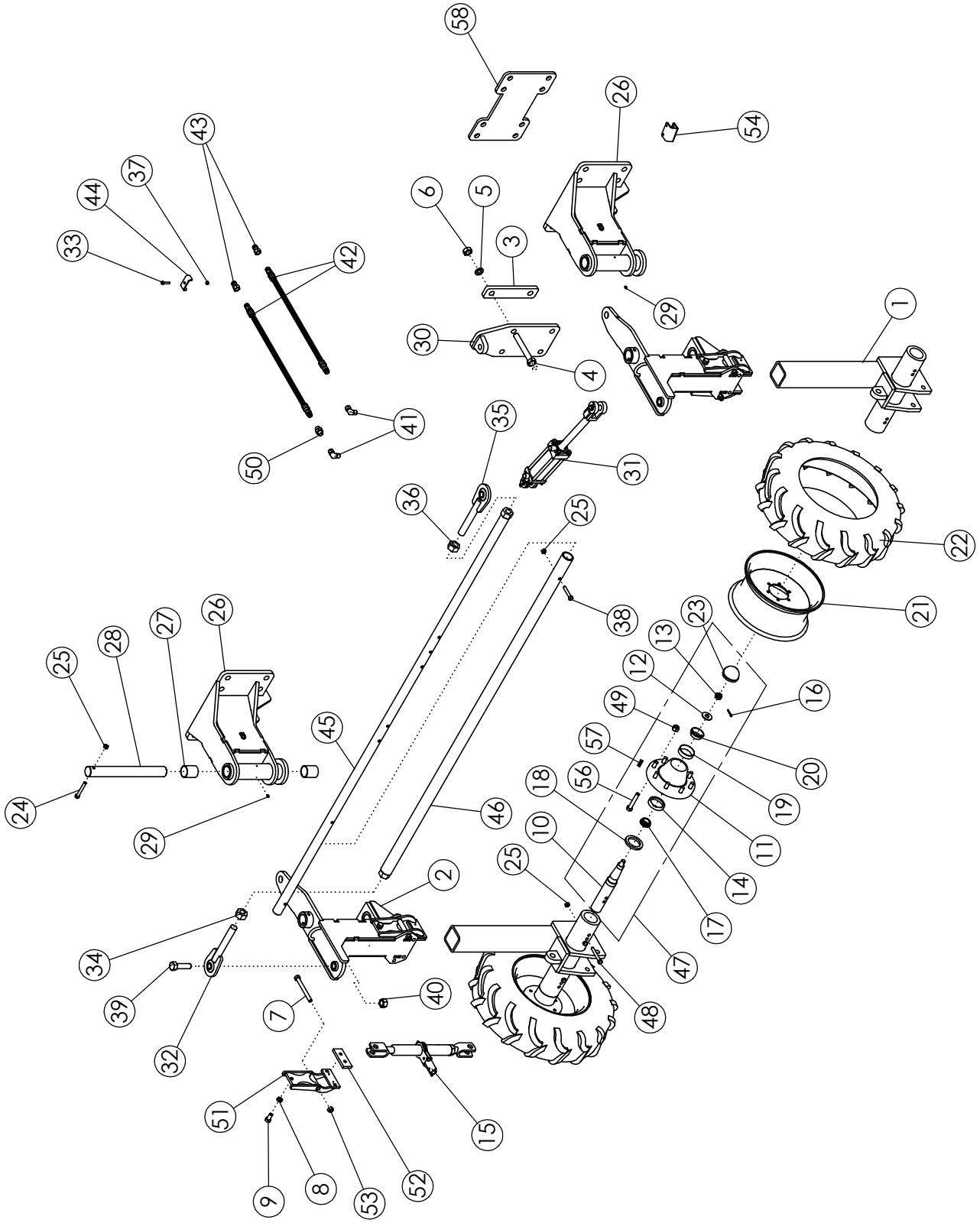
58
26
54
43
37
44
33
42
6
5
3
29
30
4
1
41
50
35
31
36
25
22
21
38
23
13
12
16
49
20
57
19
56
18
11
10
14
25
17
47
48
2
46
45
26
27
28
25
24
29
34
39
32
7
40
51
15
9
8
53
52

STEERABLE REAR STRUTS - 11.2 X 24 TIRES			
ITEM	PART NO.	DESCRIPTION	QTY
1	68236	WLDMT-SPINDLE HOUSING	2
2	68237	WLDMT-STEERABLE STRUT UPPER	2
3	58408	BAR-BOLTING	10
4	1018839	BOLT-HEX: 1.00 X 7.00 NC GR8 ZP	20
5	1013539	WASHER-LOCK: 1.00 ZP	20
6	1012664	NUT-HEX: 1.00 NC GR2 ZP	20
7	1013068	BOLT-HEX: .63 X 6.00 NC GR5 ZP	2
8	66336	PIN-CYLINDER	2
9	1030703	BOLT-HEX: .63 X 1.25 NF GR5 ZP	2
10	52954*	1022707 SPINDLE-STANDARD	4
11	53623*	HUB-WHEEL 8 BOLT	4
12	1030728*	WASHER-FLAT: SAE 1.00 ZP GR8	4
13	1030726*	NUT-SPINDLE: 1.00 NF NP	4
14	53622*	7446-42 BEARING CUP-INNER	2
15	52407	RATCHET JACK , PAINTED	2
16	1030797*	PIN-COTTER: .19 X 1.75 NP	4
17	53621*	7445-52 BEARING CONE-INNER	4
18	53619*	7044-116 SEAL	4
19	52243*	7446-28 BEARING CUP-OUTER	4
20	53620*	7445-35 BEARING CONE-OUTER	4
21	56903	WHEEL W10 X 24 8 BOLT (1.875 POS)	4
22	56976	TIRE 11.2-24 10 PLY R1	4
	68973	TUBE-REPAIR 11.2-24	AR
23	53624*	1D88691 CAP-HUB	4
24	1011612	BOLT-HEX: .50 X 3.50 NC GR5 ZP	2
25	1027461	NUT-TOPLOCK: .50 NC GR5 ZP	7
26	305925	ASSY-PIVOT MOUNT DLS	2
27	59204	BUSHING-BORED 2.500 X 2.015	4
28	58274	SHAFT	2
29	1011748	ZERK-GREASE: .25 UNF STRAIGHT	4
30	68234	WLDMT-CYLINDER BRACKET	1
31	62319	CYLINDER-HYDRAULIC 2 X 4" 3000	1
	69654	SEAL KT-CYL 2 X 4 3000PSI #62319	
32	58203	WLDMT-TIE ROD END LH	1
33	1014124	BOLT-HEX: .31 X 1.50 NC GR5 ZP	2
34	1030729	NUT-HEX: 1.25 NC GR2 ZP LH	1
35	58186	WLDMT-TIE ROD END RH	1
36	1011621	NUT-HEX: 1.25 NC GR2 ZP RH	1
37	1030700	NUT-TOPLOCK: .31 NC GR5 ZP	2
38	1016858	BOLT-HEX: .50 X 2.75 NC GR5 ZP	1
39	1011626	BOLT-HEX: 1.00 X 3.50 NC GR5 ZP	2

CONTINUED

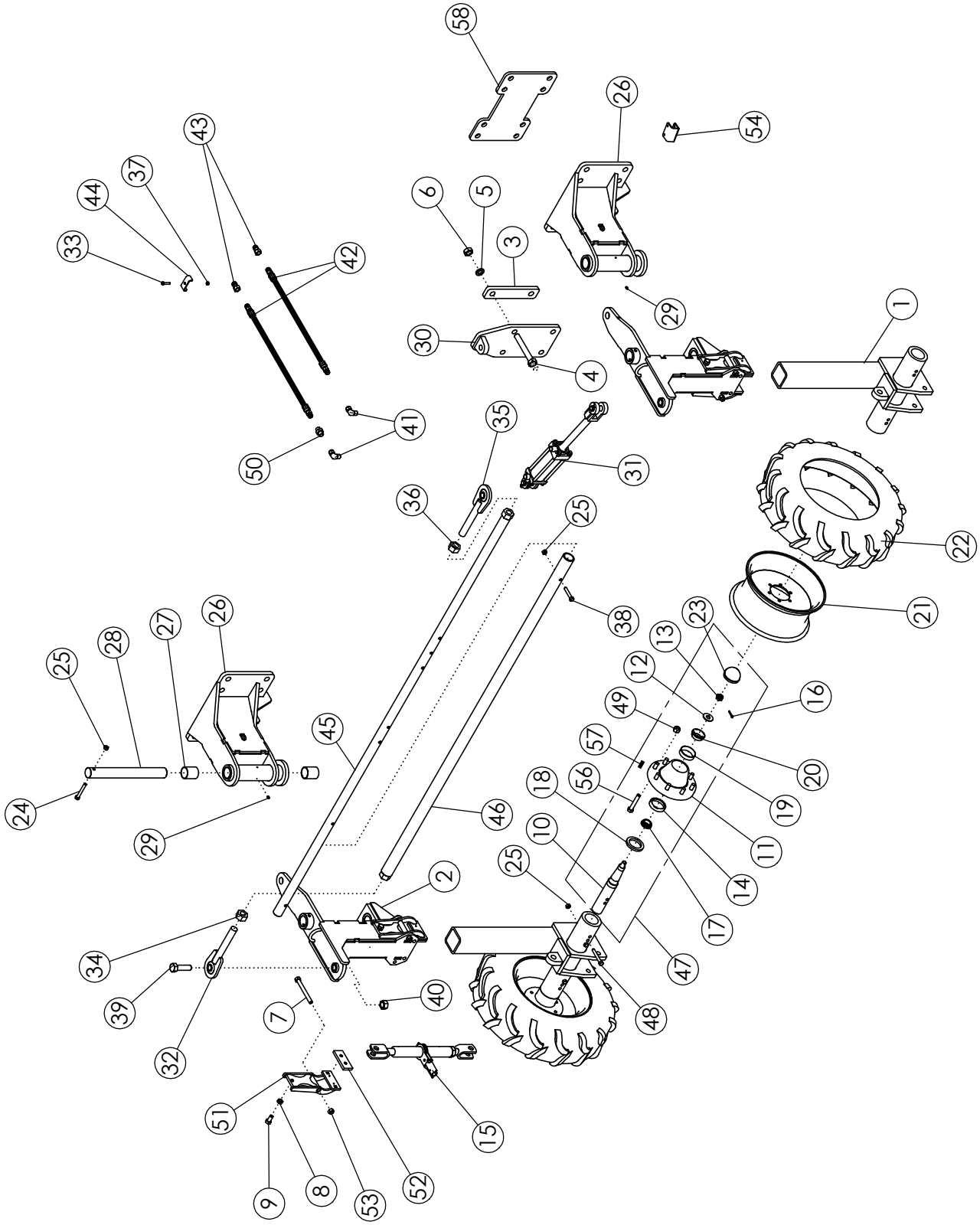
58
26
54
43
37
44
33
42
6
5
3
29
30
4
1
41
50
35
31
36
25
22
21
38
23
13
12
16
49
20
57
56
19
18
11
10
14
25
17
47
48
2
45
46
26
27
28
25
24
29
34
39
32
7
40
51
15
9
8
53
52

STEERABLE REAR STRUTS - 11.2 X 24 TIRES
(CONTINUED)

ITEM	PART NO.	DESCRIPTION	QTY
40	1016969	NUT-TOPLOCK: 1.00 NC GR5 ZP	2
41	1026247	FTG-ELBOW: 6MP-8MJ 90	2
42	300032	HOSE: .50 X 276 8MB-8FJX	2
43	36290	PIONEER TIP 8010-15P (#8 ORB)	2
44	50714	CLAMP 1/2" ZP	2
45	306581	WLDMT-TIE ROD MALE 107"	1
46	306577	WLDMT-TIE ROD FEMALE 85"	1
47	53167	ASSY-HUB & SPINDLE	4
48	1011618	BOLT-HEX: .50 X 5.00 NCGR5 ZP	4
49	53625*	NUT-WHEEL: .63-18NF	32
50	300030	FTG-RESTRICTOR 8MJ-8FJX .062	1
51	69956	WLDMT- DEF STRUT CLAMP	2
52	69971	PLASTIC-STRUT CLAMP	2
53	1016595	NUT-TOPLOCK: .63 NC GR5 ZP	2
55	69987	SCREW-MACH: FH-TORX 1/4-20 X 1.00	4
56	54393	STUD-HUB BOLT	8
57	301490	SELF TAPPING GREASE FITTING	1
		WIDE (44")	
1	68331	WLDMT-SPINDLE HOUSING (44")	2
31	58890	CYLINDER-HYDRAULIC 3 X 8	1
54	68769	WLDMT-3" CYLINDER STOP	1
58	306100	PLATE-STRUT SPACER	2

* Items are included in Item 47

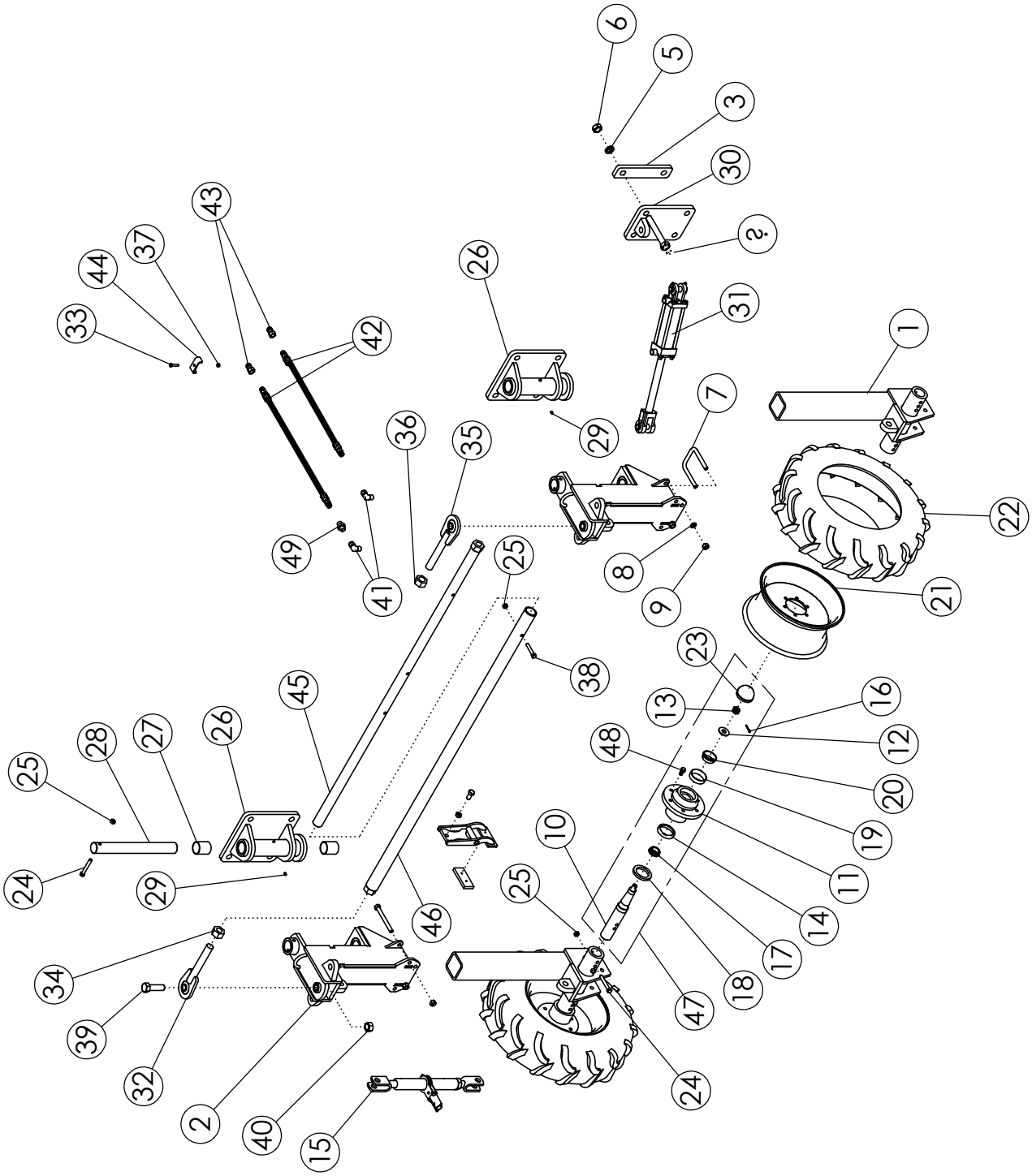
6
5
3
30
2
26
31
1
7
29
22
21
8
9
23
13
16
12
20
19
11
14
17
18
47
24
10
48
25
38
46
45
36
35
49
41
42
43
37
44
33
25
28
27
26
24
29
34
39
32
2
40
15

STEERABLE REAR STRUTS - 7.6 X 15 TIRES

ITEM	PART NO.	DESCRIPTION	QTY
1	58281	WLDMT-SPINDLE HOUSING	2
2	63558	WLDMT-STEERABLE STRUT UPPER	2
3	58408	BAR - BOLTING	6
4	1018839	BOLT-HEX: 1.00 X 7.00 NC GR8 ZP	12
5	1013539	WASHER-LOCK: 1.00 ZP	12
6	1012664	NUT-HEX: 1.00 NC GR2 ZP	12
7	60547	U-BOLT: .63 X 5.25 X 4.00 X 5.25	2
8	1011813	WASHER-LOCK: .63 ZP	4
9	1011578	NUT-HEX: .63 NC GR2 ZP	4
10	52138*	SPINDLE	4
11	52247*	HUB-WHEEL 6 BOLT	4
12	1012377*	WASHER-SPINDLE: .81 X 2.00 NP	4
13	1012376*	NUT-SLOTTED: .75 NF GR5 NP	4
14	52243*	CUP-BEARING INNER	4
15	52407	RATCHET JACK-PAINTED	2
16	1012375*	PIN-COTTER: .19 X 1.50 ZP	4
17	52245*	CONE-BEARING INNER	4
18	52242*	SEAL	4
19	52244*	CUP-BEARING OUTER	4
20	52246*	CONE-BEARING OUTER	4
21	52411	WHEEL 6.00-15 6 BOLT	4
22	52410	TIRE 7.60-15 I-3 6 PLY	4
	68974	TUBE-REPAIR 7.60-15 (NOT SHOWN)	AR
23	52241*	CAP-HUB	4
24	1011612	BOLT-HEX: .50 X 3.50 GR5 ZP	6
25	1027461	NUT-TOPLOCK: .50 NC GR5 ZP	7
26	58283	WLDMT-PIVOT MOUNT	2
27	59204	BUSHING - BORED	4
28	58274	SHAFT	2
29	1011748	ZERK - GREASE	4
30	58410	WLDMT-CYLINDER BRACKET	1
31	58888	CYLINDER HYDRAULIC 2 X 6	1
	59241	SEAL KIT FOR 58888	
32	58203	WLDMT-TIE ROD END LH	1
33	1014124	BOLT-HEX: .31 X 1.50 NC GR5 ZP	2
34	1030729	NUT-HEX: 1.25 NC GR2 LH ZP	1
35	58186	WLDMT-TIE ROD END RH	1
36	1011621	NUT-HEX: 1.25 NC GR2 ZP	1
37	1030700	NUT-HEX: .31 NC GR5 ZP	2
38	1016858	BOLT-HEX: .50 X 2.75 NC GR5 ZP	1
39	1011626	BOLT-HEX: 1.00 X 3.50 NC GR5 ZP	2

CONTINUED

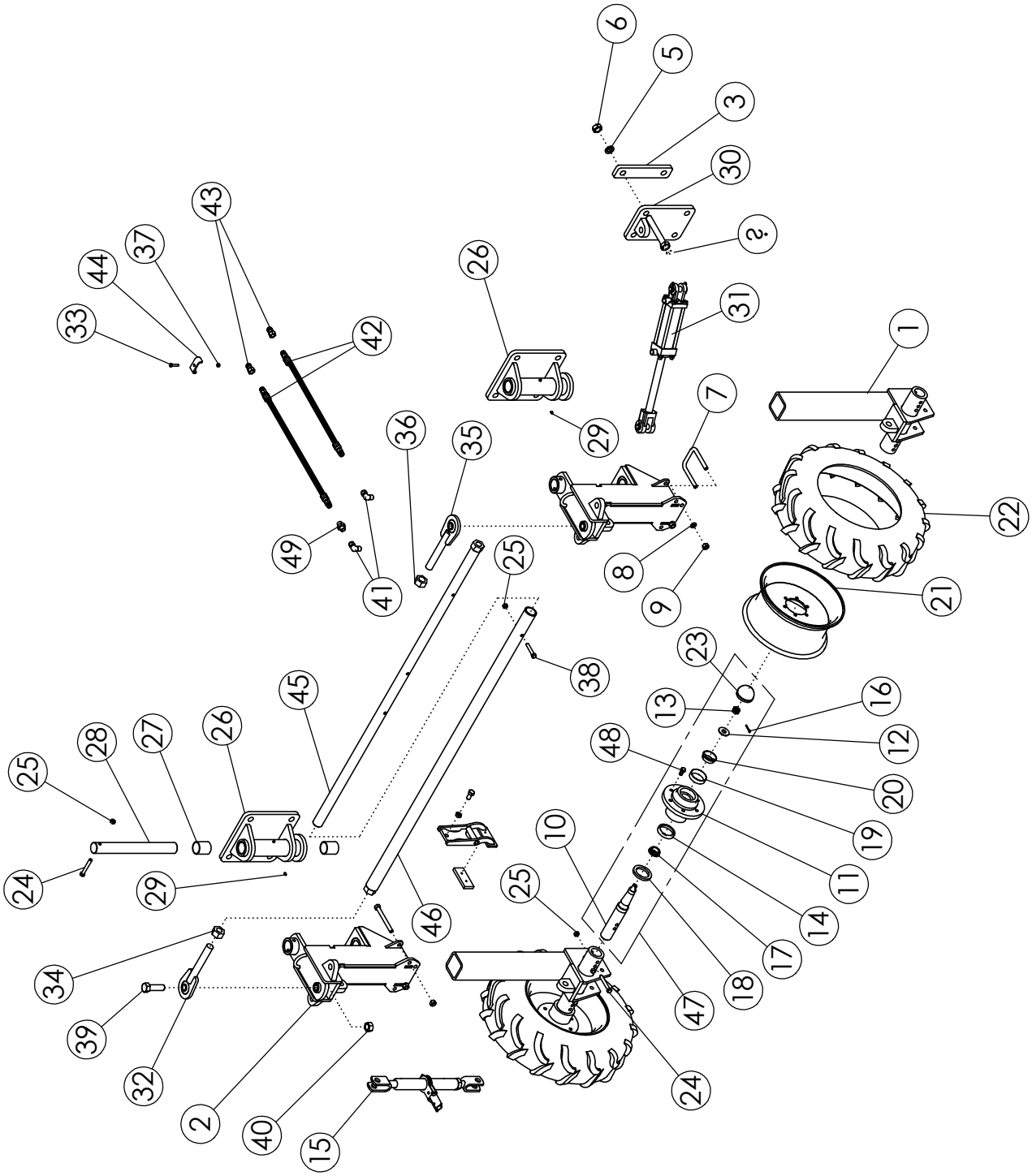
6
5
3
30
2
26
31
1
7
29
22
21
8
9
23
13
16
12
20
19
11
14
17
18
47
24
10
48
25
38
46
45
36
35
49
41
42
43
37
44
33
28
27
34
39
32
40
15

STEERABLE REAR STRUTS - 7.6 X 15 TIRES
(CONTINUED)

ITEM	PART NO.	DESCRIPTION	QTY
40	1016969	NUT-TOPLOCK: 1.00 NC GR5 ZP	2
41	1026247	FTG-ELBOW: 6MP-8MJ 90	2
42	300029	HOSE: .50 X 276 8MB-8FJX	2
43	36290	PIONEER TIP 8010-15P (#8 ORB)	2
44	50714	CLAMP 1/2" ZP	2
45	306577	WLDMT-TIE ROD FEMALE 85"	1
46	306581	WLDMT-TIE ROD MALE 107"	1
47	52116	ASSY-HUB & SPINDLE	4
48	1013426*	BOLT-LUG: .50 X 1.00 GR 5 ZP	24
49	300030	FTG-RESTRICTOR: 8MJ-8FJ .062	1

* Items are included in Item 47

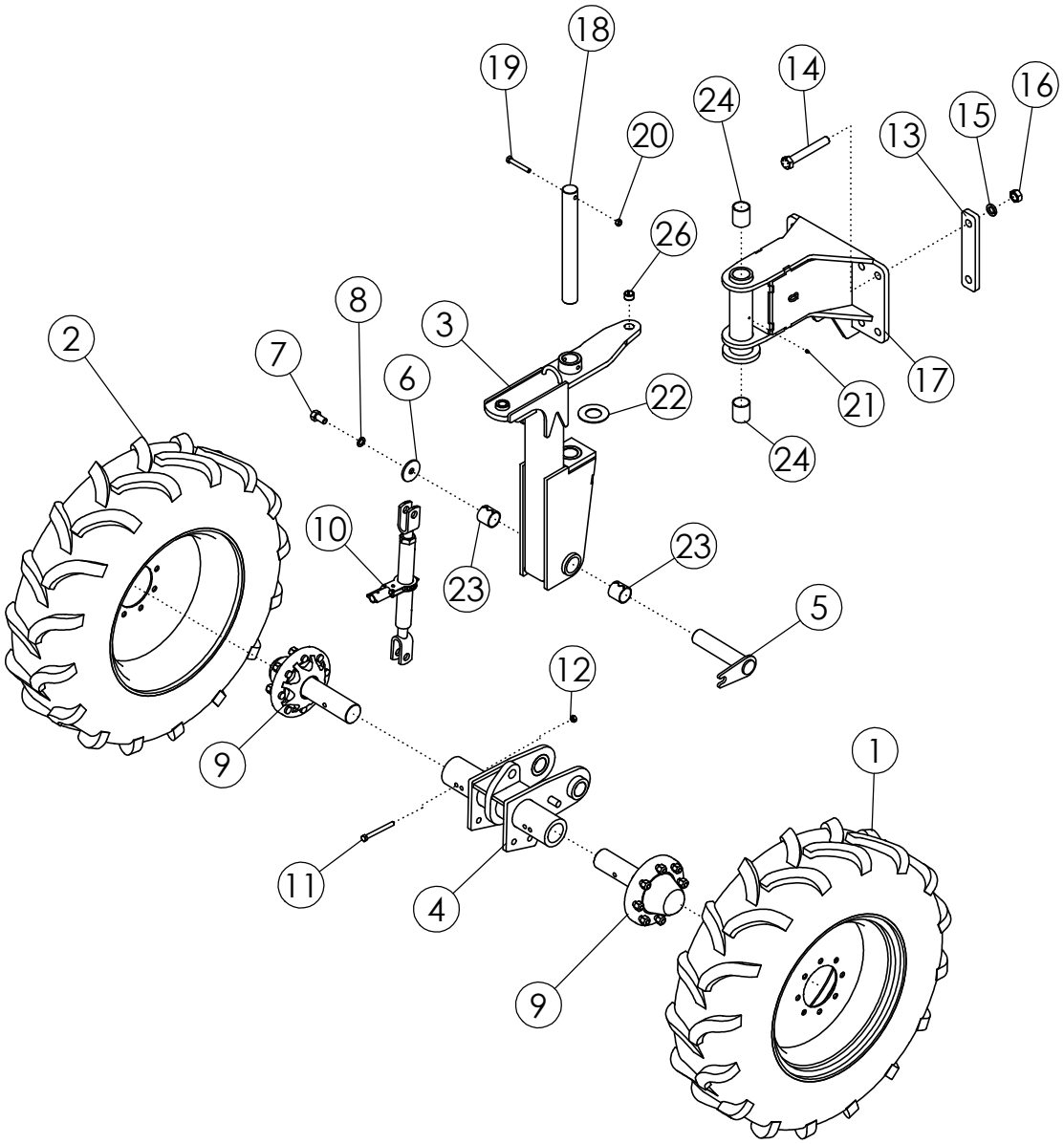
18
19
14
24
16
15
20
13
26
8
3
2
7
6
22
17
21
24
10
23
23
5
12
9
1
11
4
9

ASSY-STEERABLE STRUT UPPER DLS			
ITEM	**PART NO.**	**DESCRIPTION**	**QTY**
1	56986	TIRE-MNTD: 11.2-24 10PLY R1 RH	1
2	63992	TIRE-MNTD: 11.2-24 10PLY R1 LE	1
3	305560*	WLDMT-STRUT UPPER	1
4	305561	WLDMT-SPINDLE RECEIVER 22"	1
	305562	WLDMT-SPINDLE RECEIVER 44"	
5	305573*	WLDMT-DEF STRUT FLAG PIN	1
6	305575*	PLATE-PIVOT POINT END CAP ZP	1
7	58367*	BOLT-HEX: .75 X 1.50 NC GR5 ZP	1
8	1012061*	WASHER-LOCK: .75 ZP	1
9	53167	ASSY-HUB & SPINDLE: 8 BOLT W/ZERK	2
10	52407	RATCHET JACK-PAINTED	1
11	1011618	BOLT-HEX: .50 X 5.00 NC GR5 ZP	1
12	1027461	NUT-TOPLOCK: .50 NC GR5 ZP	1
13	58408	BAR - BOLTING	4
14	1018839	BOLT-HEX: 1.0 X 7.00 NC GR8 ZP	4
15	1013539	WASHER-LOCK: 1.00 ZP	4
16	1012664	NUT-HEX: 1.00 NC GR2 ZP	4
17	305925-1*	ASSY-PIVOT MOUNT DLS	1
18	58274*	SHAFT	1
19	1011612*	BOLT-HEX: .50 X 3.50 GR5 ZP	1
20	1027461*	NUT-TOPLOCK: .50 NC GR5 ZP	1
21	1011748*	ZERK - GREASE	2
22	305586*	BUSHING-THRUST 2.062 X 4.00 X .125	1
23	73466*	BUSHING-SPRING 2.25 X 2.0 X 2.0 L (REF)	2
24	59204*	BUSHING-BORE 2.5 X 2.015	2
25	45572	SPRING BUSHING 1.25 X 1 X 1	1
26	307240*	BUSHING-SPRING 1.25 X 1.0 X 0.75	1

Parts marked by * are included in 305924

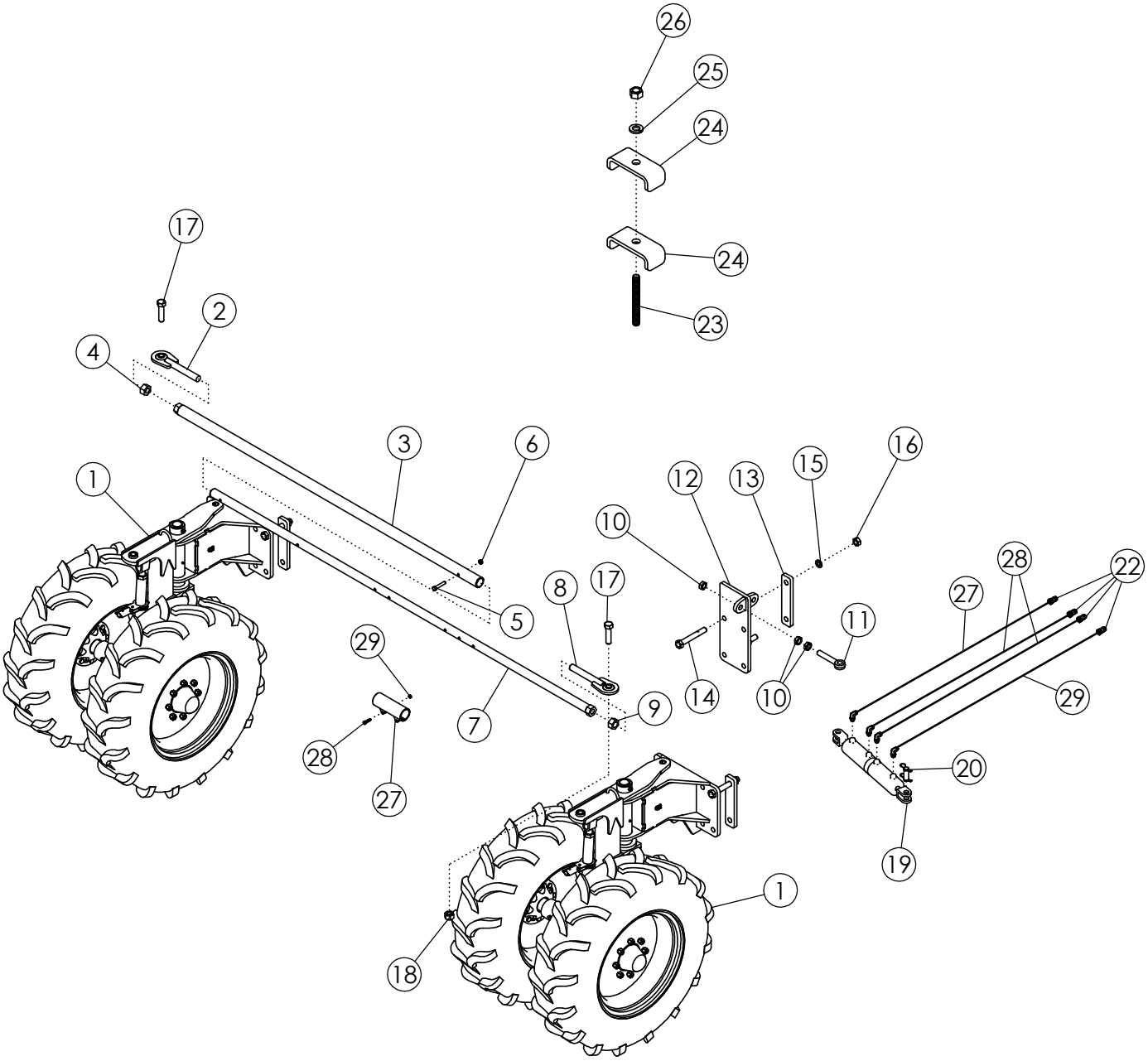
26
25
24
24
23
17
2
4
3
6
1
12
13
15
16
10
28
22
8
17
27
5
11
29
14
10
29
9
7
28
27
20
19
1
18

STRUTS-STEERABLE 11.2 X 24 22" CENTERING

ITEM	PART NO.	DESCRIPTION	QTY
1	305922	ASSY-STURT STEERABLE 11.2 X 24 22" PIVOT	2
2	58203	WLDMT-TIE ROD END LH	1
3	58416	WLDMT-TIE ROD 70" FEMALE	1
	306577	WLDMT-TIE ROD 85" FEMALE	
4	1030729	NUT-HEX: 1.25 NC GR2 LH ZP	1
5	1016858	BOLT-HEX: .50 X 2.75 NC GR5 ZP	1
6	1027461	NUT-TOPLOCK: .50 NC GR5 ZP	1
7	58415	WLDMT-TIE ROD 70" MALE 6 ROW	1
	306581	WLDMT-TIE ROD 107" MALE 8R/12ROIW	
8	58186	WLDMT-TIE ROD END RH	1
9	1011621	NUT-HEX: 1.25 NC GR2 ZP	1
10	1026880	NUT-HEX JAM: 1.00 NC GR2 ZP	3
11	62081	BOLT-EYEBOLT 1" X 6" GR 8	1
12	306732	WLDMT-CYLINDER BRACKET ADJ	1
13	58408	BAR - BOLTING	2
14	1018839	BOLT-HEX: 1.0 x 7.00 NC GR8 ZP	4
15	1013539	WASHER-LOCK: 1.00 ZP	4
16	1012664	NUT-HEX: 1.00 NC GR2 ZP	4
17	1032276	BOLT-HEX: 1.0 X 3.50 NC GR8 ZP	2
18	1016970	NUT-TOPLOCK: 1.00 NC GR8 ZP	2
19	69200	CYLINDER HYD 3 X 4 4 PORT 24.5 CLOSED	1
	305293	SEAL KIT 69200 2015 AND NEWER	
20	69167	PIN-CYLINDER W/CLIPS 1.00 X 2.25	2
21	58560	FTG-ELBOW: 8MB-8MJ-90	4
22	36290	PIONEER TIP 8010-15P (#8 ORB)	4
23	65379	STUD-.375 X 3.00 UNC ZP	4
24	50714	CLAMP .50 ZP	8
25	1011586	WASHER-LOCK: .38 ZP	4
26	1011576	NUT-HEX: .38 NC GR2 ZP	4
27	69557	WLDMT-TIE ROD CLAMP 6ROW	1
	306579	WLDMT-TIE ROD CLAMP 8R/12ROW	
28	1011302	BOLT-HEX: .38 X 1.50 NC GR5 ZP	2
29	1016999	NUT-TOPLOCK: .368 NC ZP	2

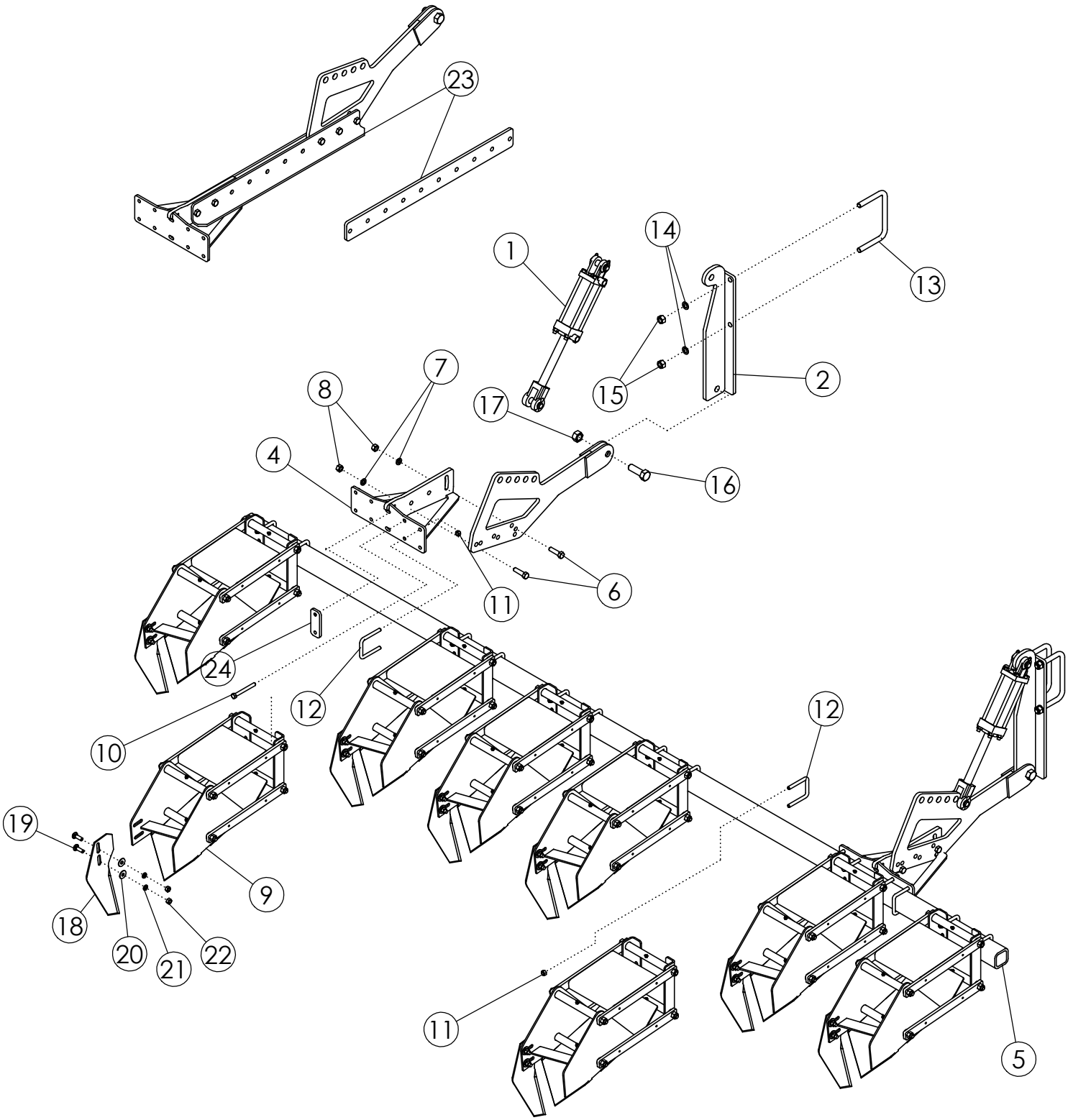
23
1
14
13
2
15
7
8
17
4
16
6
11
24
12
10
12
19
9
18
20
21
22
11
5

SCALPER BAR ASSEMBLY

ITEM	PART NO.	DESCRIPTION	QTY	
			8R22	6R30
1	58890	CYLINDER HYDRAULIC 3 X 8	2	2
	301314	SEAL KIT FOR 58890 UNIVERSAL		
2	68239	WLDMT - MOUNT	2	2
3	69126	WLDMT-SCALPER ARM MNT	2	2
4	69127	WLDMT-BAR MNT BRACKET	2	2
5	51864	SCALPER BAR	1	1
6	1017526	BOLT-HEX .63 X 2.25 NC GR5 ZP	4	4
7	1011813	WASHER-LOCK: .63 ZP	4	4
8	1011578	NUT-HEX: .63 NC GR2 ZP	4	4
9	63462	ASSY-SCALPER BASKET	6	6
10	1013682	BOLT-HEX: .50 X 4.50 NC GR5 ZP	8	8
11	1027461	NUT-TOPLOCK: .50 NC GR5 ZP	44	36
12	69954	U-BOLT: .50 X 4.50 X 3 X 4.50	18	14
13	56263	U-BOLT: .75 X 5.5 X 8 X 5.5	4	4
14	1012061	WASHER-LOCK: .75 ZP	8	8
15	1011620	NUT-HEX: .75 NC GR2 ZP	8	8
16	1018007	BOLT-HEX: 1.0 X 3.00 NC GR5 ZP	2	2
17	1016969	NUT-TOPLOCK: 1.00 NC GR5 ZP	2	2
18	51782	SCALPER KNIFE-HEAT TREAT	8	6
19	1011660	BOLT-CRG: .50 X 1.50 NC GR5 ZP	16	12
20	1014443	WASHER-FLAT: .50 ZP	16	12
21	1011581	WASHER-LOCK: .50 ZP	16	12
22	1011577	NUT-HEX: .50 NC ZP	16	12
23	305183*	PLATE-SCALPER EXTENSION	4	4
	306101	PLATE-SCALPER EXT FLAT		
24	51551	BAR-BASKET MOUNTING	2	2

*USED WITH LARGER TIRE OPTION

*OPT. 306101 FLAT BAR USED IN TIGHT CLEARNCE SITUATIONS i.e. 44" STRUTS

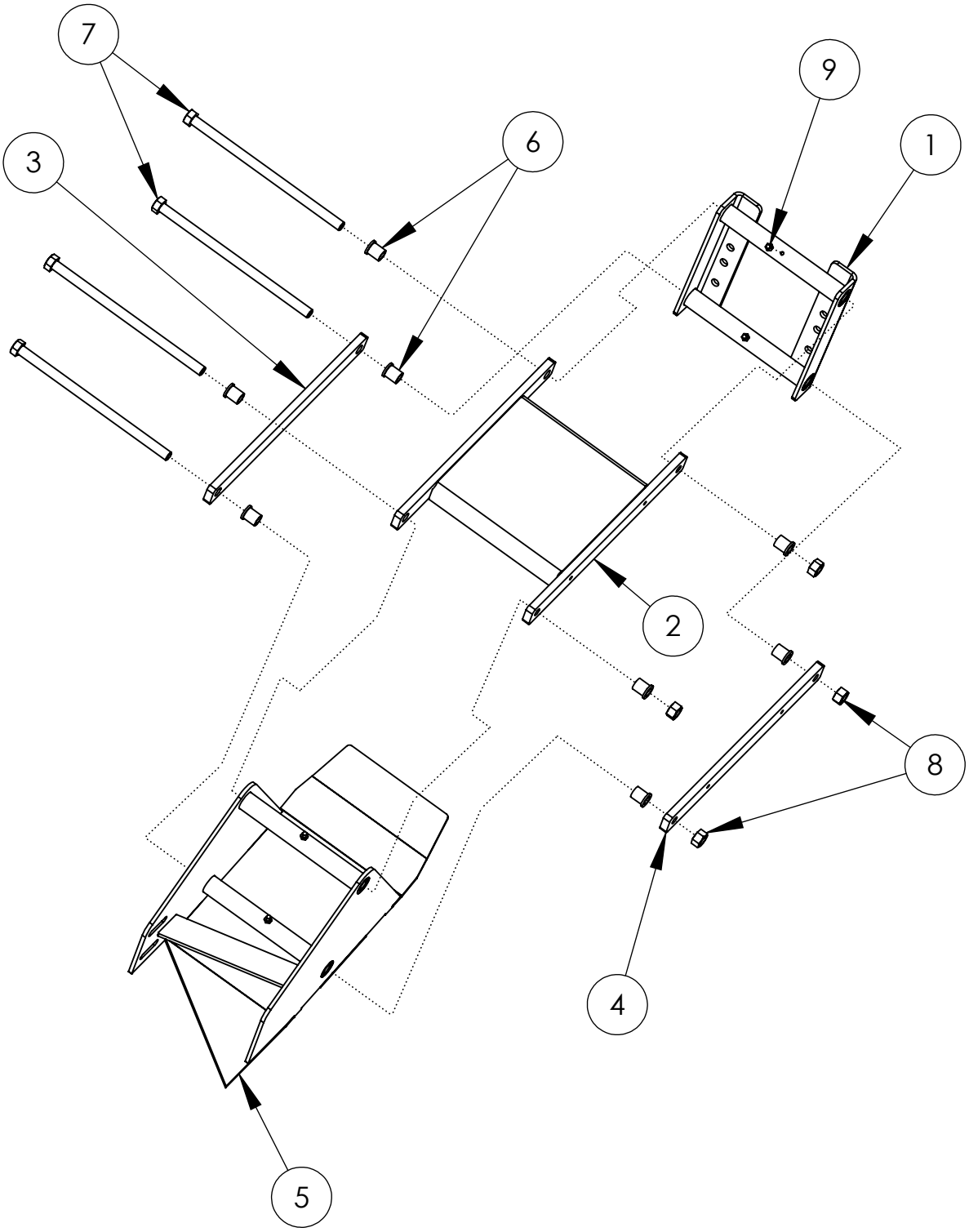
7
9
6
1
3
2
8
4
5

SCALPER BASKET			
ITEM	**PART NO.**	**DESCRIPTION**	**QTY**
1	63551	WLDMT-BASKET MOUNT	1
2	306849	WLDMT-UPPER LINK	1
3	63555	BAR-PARALLEL LINK	1
4	306848	BAR-PARALLEL LINK AHC THREADED PC	1
5	63550	WLDMT-BASKET FRAME	1
	306948*	WLDMT-BASKET FRAME V2	
6	306080	BUSHING-FLANGE: .628 X 8.16 X 1.4375L	8
7	306752	BOLT-HEX: .63 X 11.813 N GR5 ZP	4
8	59316	NUT-CENTERLOCK: .625 NC GR5 ZP	4
9	1011748	ZERK-GREASE .25 UNF STRAIGHT	4

* Used in ASSY-SCALPER BASKET W/HARDWARE - SHORT

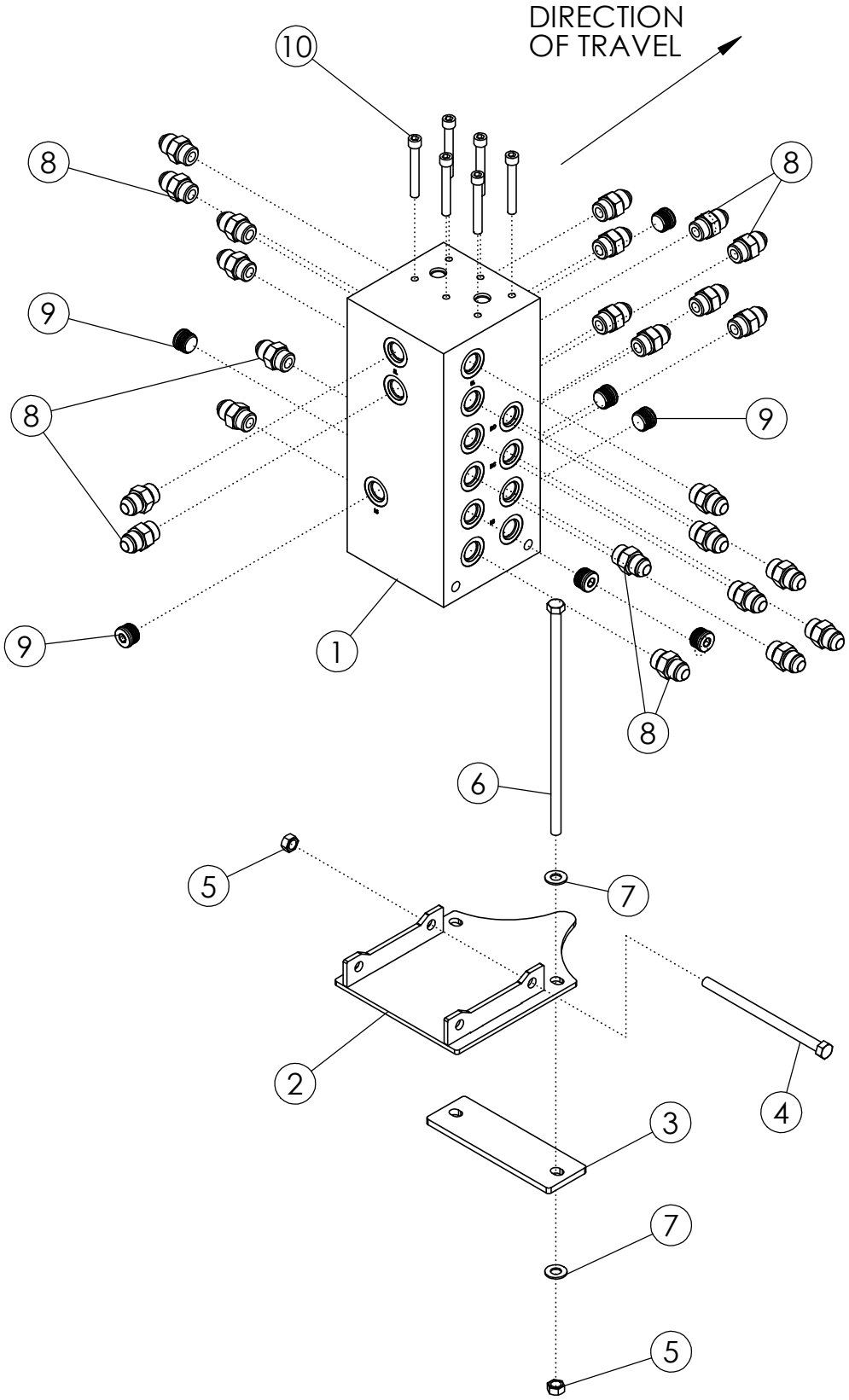
DIRECTION
OF TRAVEL
10
8
8
9
8
9
9
1
8
6
5
7
2
4
3
7
5

VALVE BLOCK AND MOUNT			
ITEM	**PART NO.**	**DESCRIPTION**	**QTY**
1	305960	HYDRAULIC BLOCK DLS	1
2	305659	WLDMT-VALVE BLOCK MOUNT	1
3	305662	PLATE-VALVE BLOCK BOLTING	1
4	34925	BOLT-HEX: .38 X 6.00 NC GR5 ZP	2
5	1016999	NUT-TOPLOCK: .38 NC GR5 ZP	4
6	305663	BOLT-HEX: .38 X 10.00 NC GR5 ZP	2
7	1014608	WASHER-FLT: SAE .38 ZP	4
8	56226	FTG-ADAPTER: 8MB-8MJ	24
9	305666	FTG-PLUG: 8MB ALLEN DRIVE	AR
10	306097	BOLT-SHCS .31 X 2.25 NC ZP	6

**** BLOCK SHOWN WITH ALL OPTIONS, IF NOT EQUIPPED BLOCK PORTS ARE PLUGGED WITH ITEM 9.**

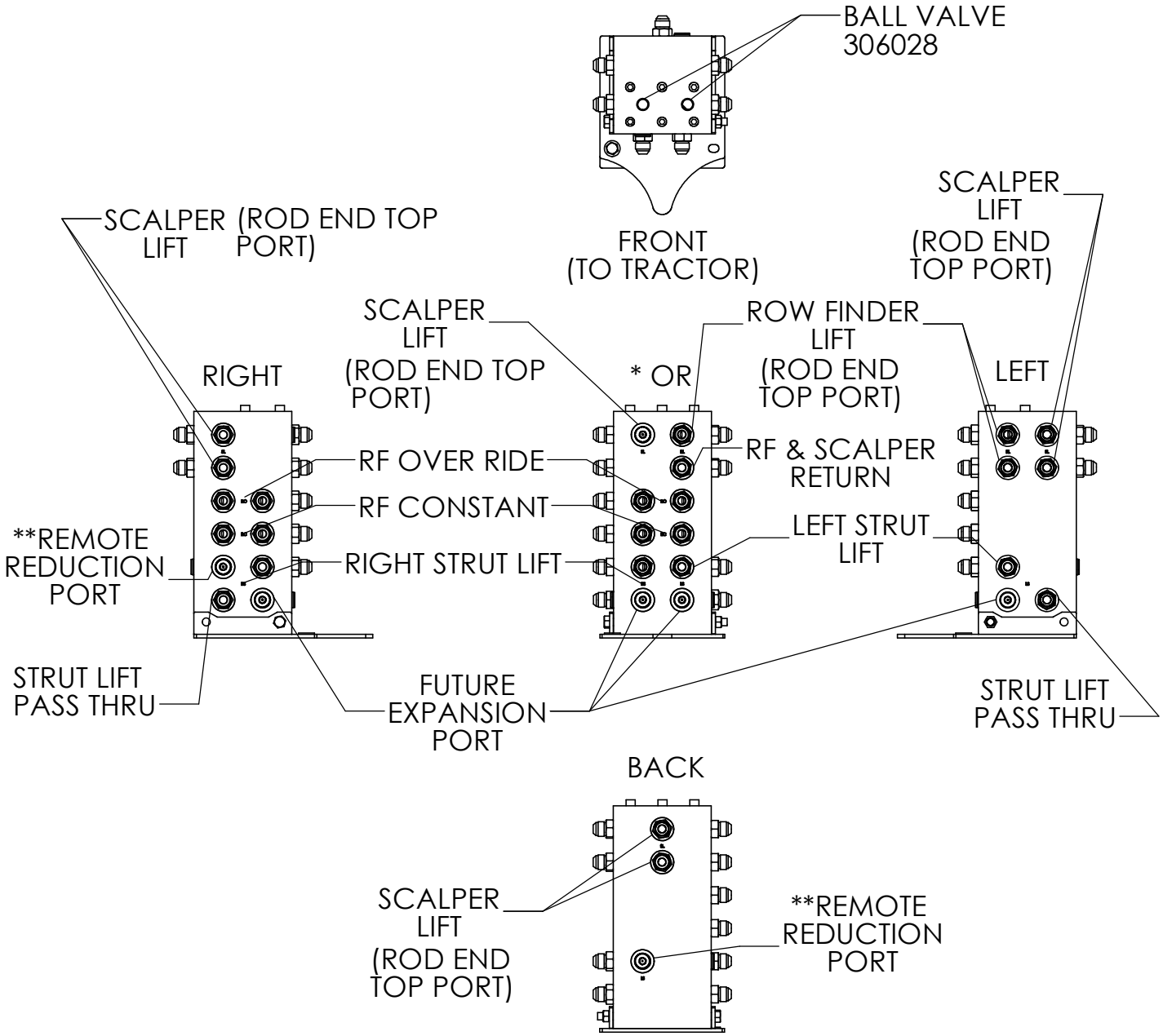

* EITHER THE SCALPER LIFT OR ROW FINDER LIFT PORT IS USED AND THE OTHER IS PLUGGED.
- IF A FRAME MOUNTED ROW FINDER IS USED, WITH OR WITHOUT SCALPER, THE ROW FINDER LIFT PORT IS USED IN CONJUNCTION WITH A BALL VALVE. ENABELING USE OF BOTH THE SCALPER (IF EQUIPPED) AND ROW FINDER OR ROW FINDER.
- IF A SCALPER WITHOUT FRAME MOUNTED ROW FINDER IS EQUIPPED THE SCALPER LIFT PORT IS USED AND NO BALL VALVE IS INSTALLED.

** REMOTE REDUCTION PORT ALLOWS THE ROW FINDER CONSTANT FUNCTION TO BE TIED INTO THE STRUT LIFT FUNCTION TO ELIMINATE THE NEED FOR ONE ADDITIONAL HYDRAULIC REMOTE ON THE TRACTOR. IN THIS CONFIGURATION RETRACTING OR LOWERING THE STRUTS ALSO POWERS THE ROWFINDER CONSTANT FUNCTION. WHEN EXTENDING THE STRUTS A CHECK VALVE INSTALLED ON THE ROW FINDER PROHIBITS BACKWARDS OIL FLOW.

** AN ALTERNATE OPTION TO REDUCE HYDRAULIC REMOTES REQUIRED WOULD BE TO HOOK UP THE ROW FINDER CONSTANT TO THE TRACTOR'S POWER BEYOND USING AN EXTERNAL FLOW CONTROL SET TO APPROXIMATELY 7 GPM.

CROSS SECTIONAL BLOCK VIEW

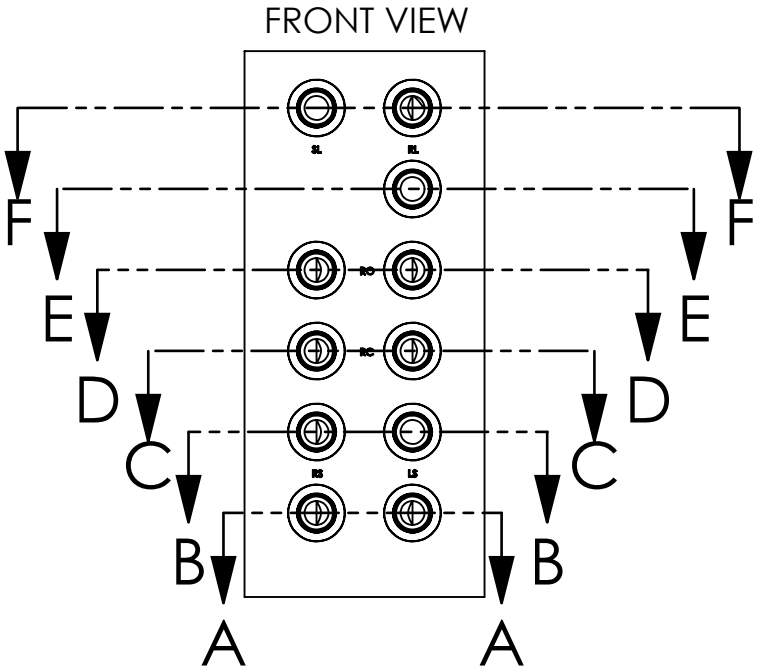

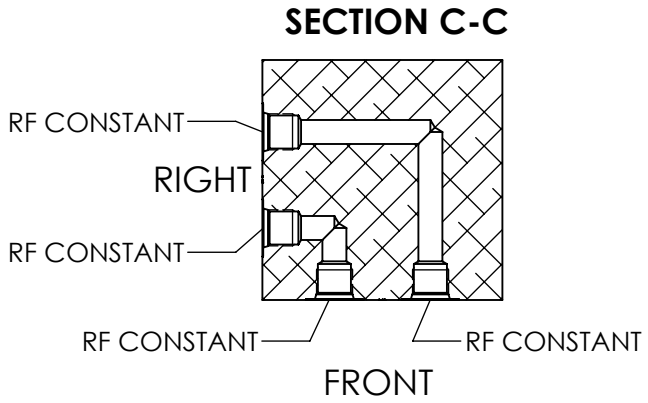

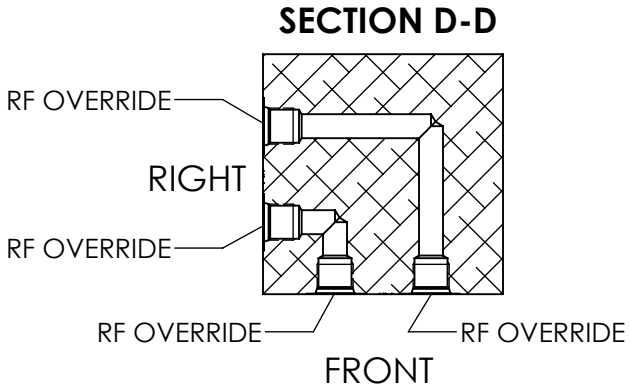

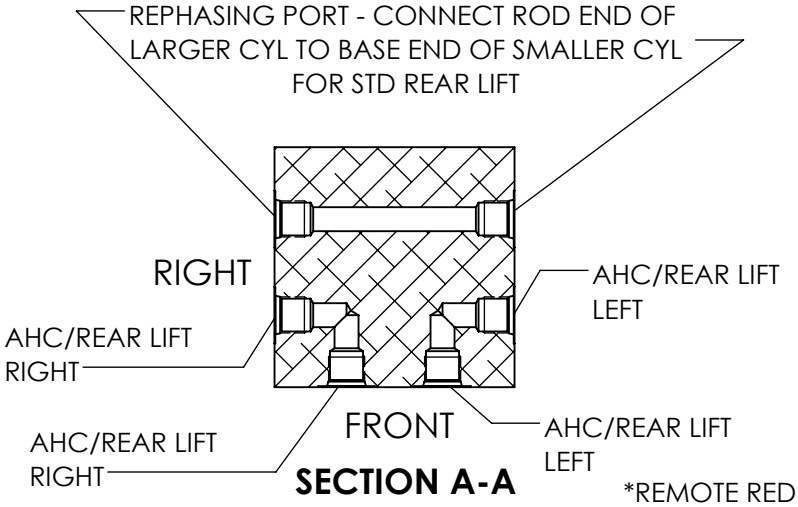

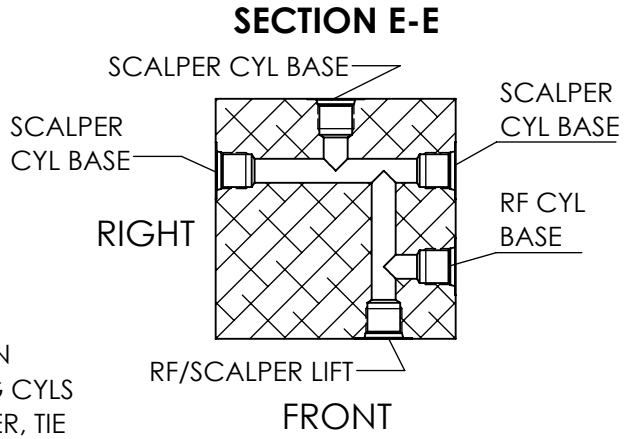

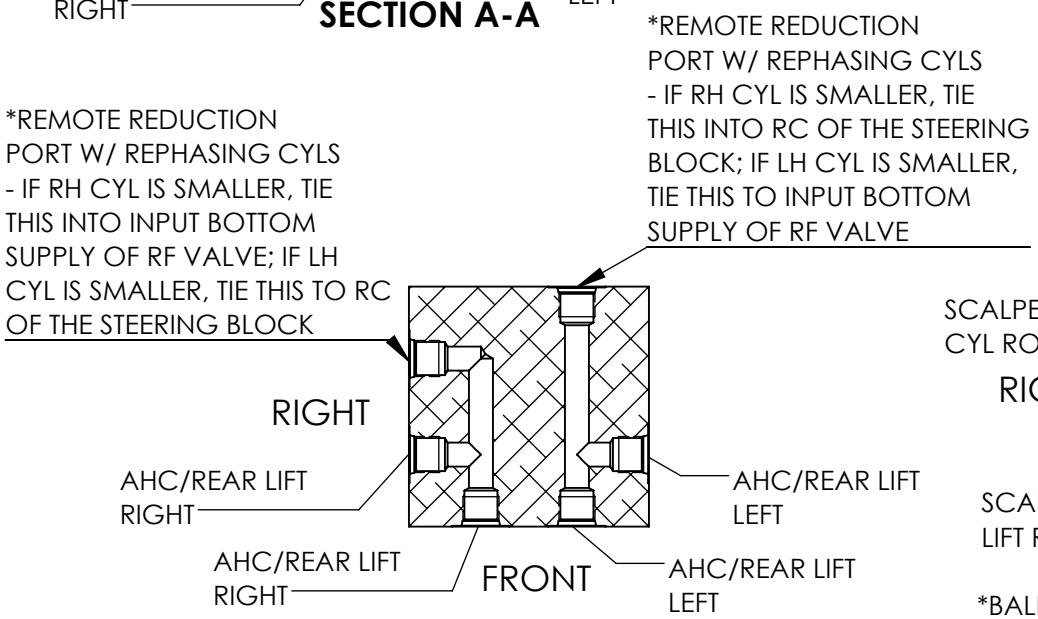

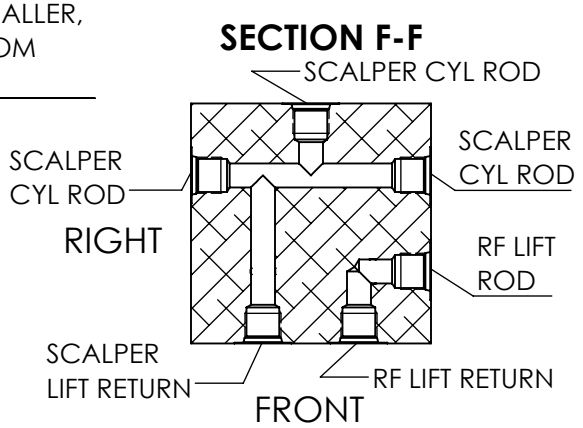

BALL VALVE IS USED WITH RF RETURN WHEN FRAME MNT RF AND SCALPERS ARE USED

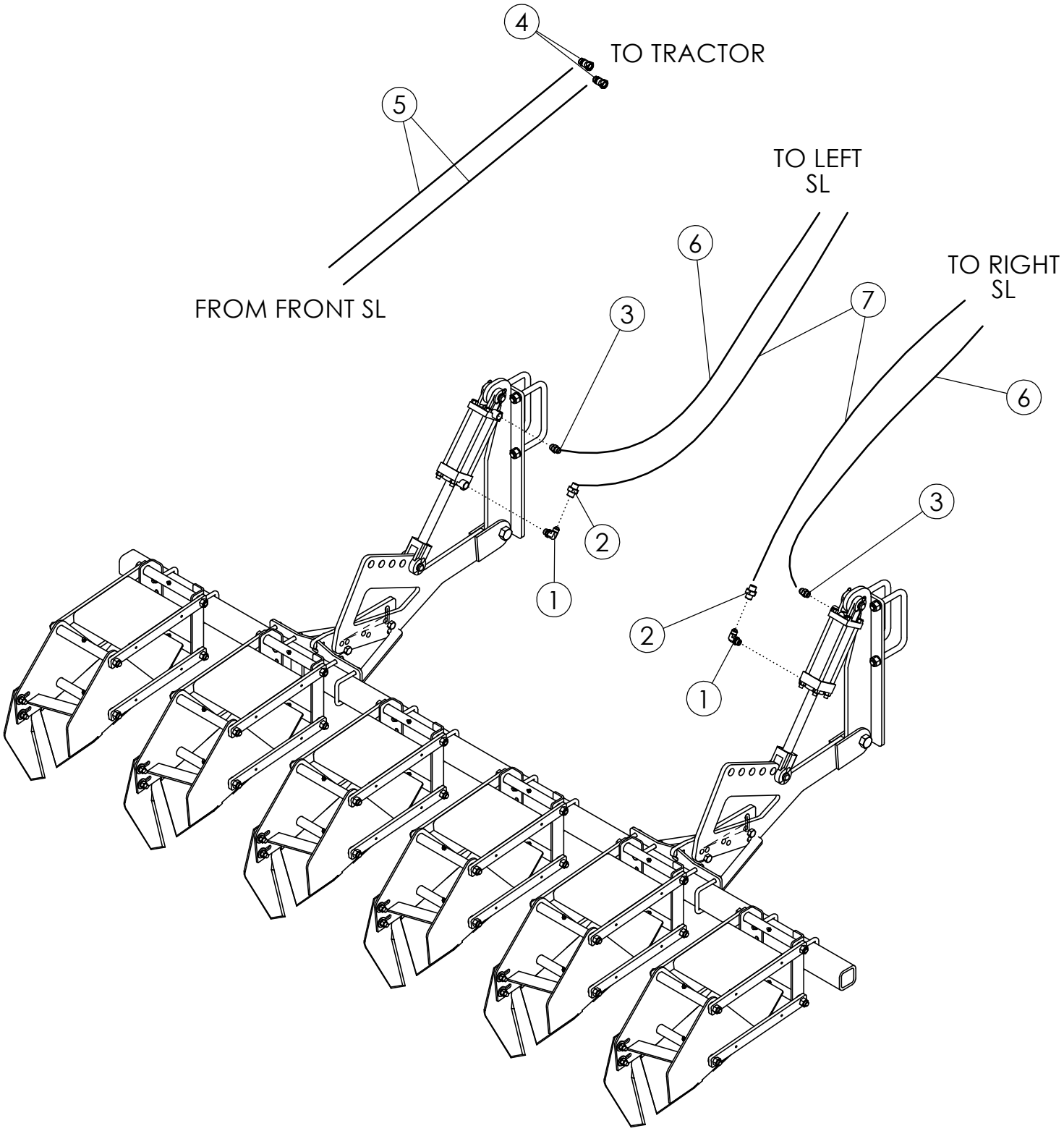
4
TO TRACTOR
5
TO LEFT
SL
6
TO RIGHT
SL
FROM FRONT SL
3
7
6
3
2
1
2
1

SCALPER HYDRAULICS			
ITEM	**PART NO.**	**DESCRIPTION**	**QTY**
1	58560	FTG-ELBOW: 8MB-8MJ-90	2
2	1019844	FTG-RESTRICTOR (8FJ-8MB .090)	2
3	56226	FTG-ADAPTER: 8MB-8MJ	2
4	36290	PIONEER TIP 8015-10(#8 ORB)	2
5	305684	HOSE: .50 X 215 8FJX	2
6	68247	HOSE: .38 X 060 8FJX-8FJX	2
7	68248	HOSE: .38 X 068 8FJX-8FJX	2

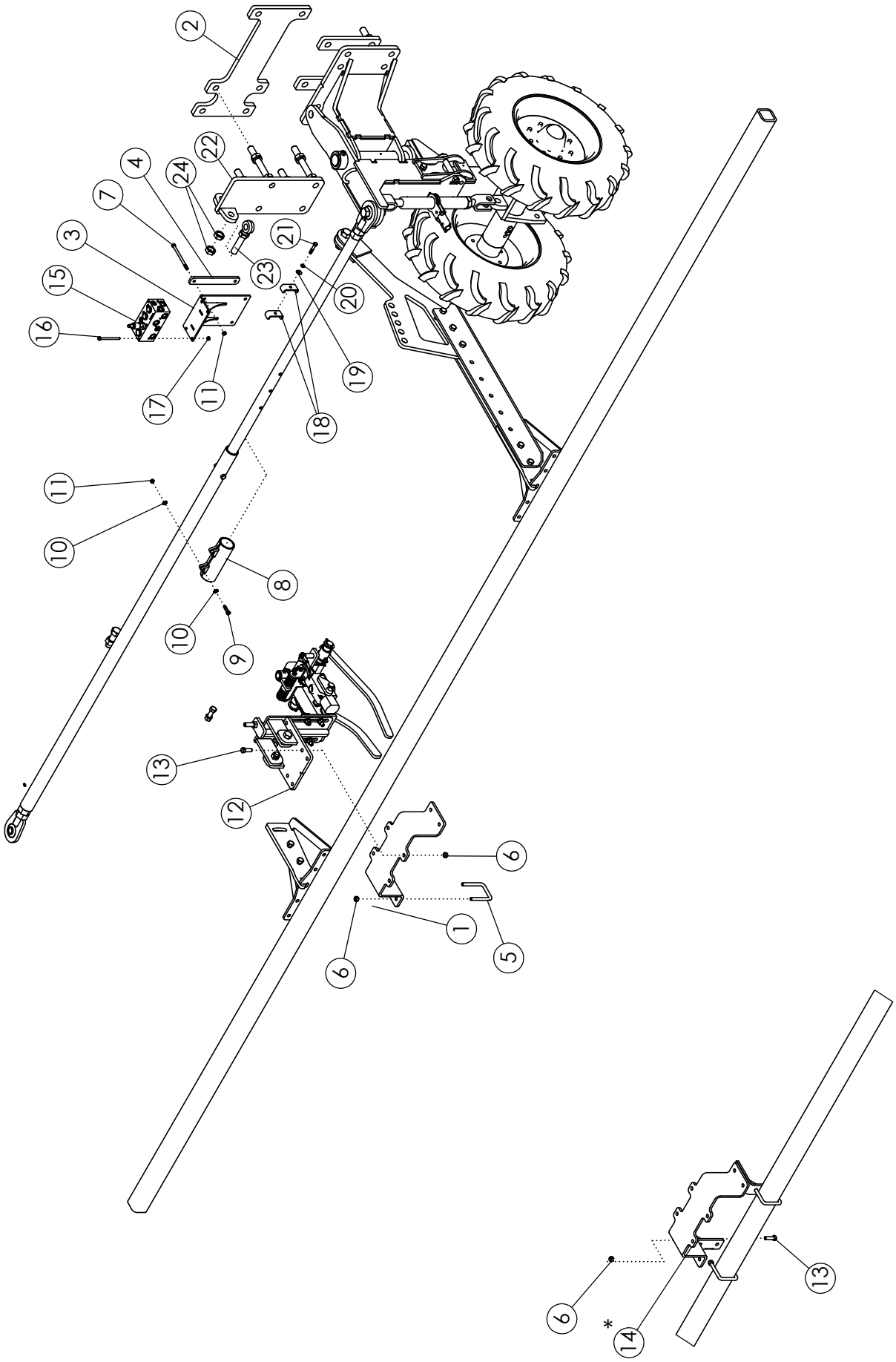

NON-AMITY SCALPER MOUNTING

ROW FINDER - SCALPER MOUNT 6R/8R

ITEM	PART NO.	DESCRIPTION	QTY
1	70021	WLDMT-DEF ROW FINDER MOUNT	1
2	305775	PLATE-DEF CYL MNT STRAP (28.5" STROKE)	1
3	69996	WLDMT-DEF VALVE MNT	1
4	64288	PLATE-BRACKET BACKING	2
5	69954	U-BOLT: .50 X 4.50 X 3 X 4.50	2
6	1027461	NUT-TOPLOCK: .50 NC GR5 ZP	8 OR 12*
7	64289	BOLT-HEX: .38 X 5.50 NC GR5 ZP	4
8	69557	WLDMT-TIE ROD CLAMP	1
9	1011602	BOLT-HEX: .38 X 1.50 NC GR5 ZP	2
10	1014608	WASHER-FLT: SAE .38 ZP	4
11	1016999	NUT-TOPLOCK: .38 NC GR5 ZP	6
12	**NOTE**	HYDRAULIC ROW FINDER	1
13	1011608	BOLT-HEX: .50 X 1.75 NC GR 5 ZP	4 OR 8*
14	69454*	WLDMT-RF MOUNT EXTENSION	2
15	69999	VALVE-DEF RF RETURN	1
16	1030778	BOLT-HEX: .31 X 4.00 NC GR5 ZP	2
17	1030700	NUT-TOPLOCK: .31 NC GR5 ZP	2
18	50714	CLAMP .50" ZP	10
19	1014608	WASHER-FLAT: SAE .38 XP	5
20	1011586	WASHER-LOCK: .38 ZP	5
21	1013239	BOLT-HEX: .38 X 3.00 NC GR5 ZP	4
22	306732	WLDMT-CYLINDER BRACKET ADJ	1
23	62081	BOLT-EYEBOLT 1" X 6" GR 8	1
24	1026880	NUT-HEX JAM: 1.00 NC GR2 ZP	3

* ITEM 14 AND HARDWARE USED ONLY WITH NON AMITY SCALPER BASKETS

NOTE

- ROWFINDER NEEDS TO BE OPEN CENTER (PLUG REMOVED)
- PLACE ROWFINDER ON THE FIRST ROW LEFT OF CENTER
- FOR PARTS, REFERENCE ROWFINDER MANUAL PAGE (M4770)

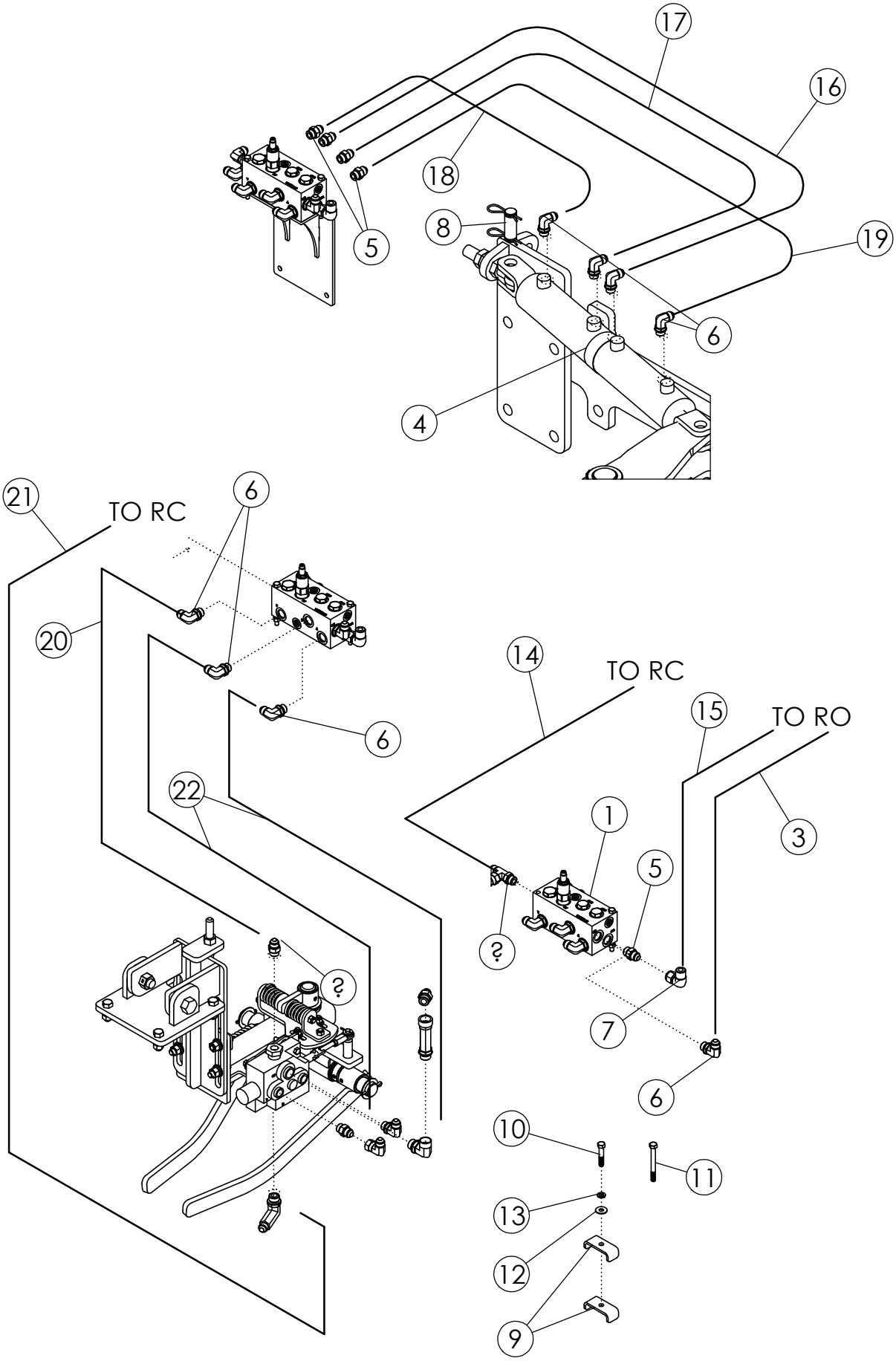
17
16
18
8
5
19
6
4
21
TO RC
6
20
14
TO RC
15
TO RO
6
22
1
3
5
?
?
7
6
10
11
13
12
9

SCALPER MOUNTED ROW FINDER HYDRAULICS

ITEM	PART NO.	DESCRIPTION	QTY
1	69999	VALVE-DEF ROWFINDER RETURN	1
2	65901	FTG-ELBOW: 10MB-8MJ-90	1
3	69571	HOSE: .50 X 258 8MB-8FJX90	1
4	69200	CYLINDER-HYD 3 X 4 4PORT 23.5 CLOSED	1
	35293	SEAL KIT 2015 AND NEWER	
5	56226	FTG-ADAPTER: 8MB-8MJ	6
6	58560	FTG-ELBOW: 8MB-8MJ 90	10
7	57668	FTG-ELBOW: 8MJ-8FJX 90	1
8	69167	PIN-CLYNDER W/CLIPS 1.00 X 2.25	2
9	50714	CLAMP .50" ZP	10
10	1011603	BOLT-HEX: .38 X 1.75 NC GR5 ZP	1
11	1013239	BOLT-HEX: .38 X 3.00 NC GR5 ZP	4
12	1014608	WASHER-FLAT: SAE .38 ZP	5
13	1011586	WASHER-LOCK: .38 ZP	5
14	69570	HOSE: .50 X 252 8FJX-8MB	1
15	69572	HOSE: .50 X 258 8MB-8FJX90L	1
16	305043	HOSE: .50 X 086 X 8FJX-8FJX90 (6R/8R)	1
	69564	HOSE: .50 X 108 8FJX-8FJX90 (9R/12R)	
17	305044	HOSE: .50 X 086 X 8FJX-8FJX90L (6R/8R)	1
	69565	HOSE: .50 X 108 8FJX-8FJX90L (9R/12R)	
18	305045	HOSE: .50 X 092 X 8FJX-8FJX90L (6R/8R)	1
	69566	HOSE: .50 X 114 8FJX-8FJX90L (9R/12R)	
19	305046	HOSE: .50 X 080 X 8FJX-8FJX90 (6R/8R)	1
	69567	HOSE: .50 X 102 8FJX-8FJX90 (9R/12R)	
20	69568	HOSE: .50 X 090 8FJX-8FJX	1
21	69569	HOSE: .50 X 336 8MB-8FJX90	1
22	300254	HOSE: .50 X 076 X 8FJX-8FJX	2
23	62091	FTG-ADAPTER: 10MB-10MJ	1

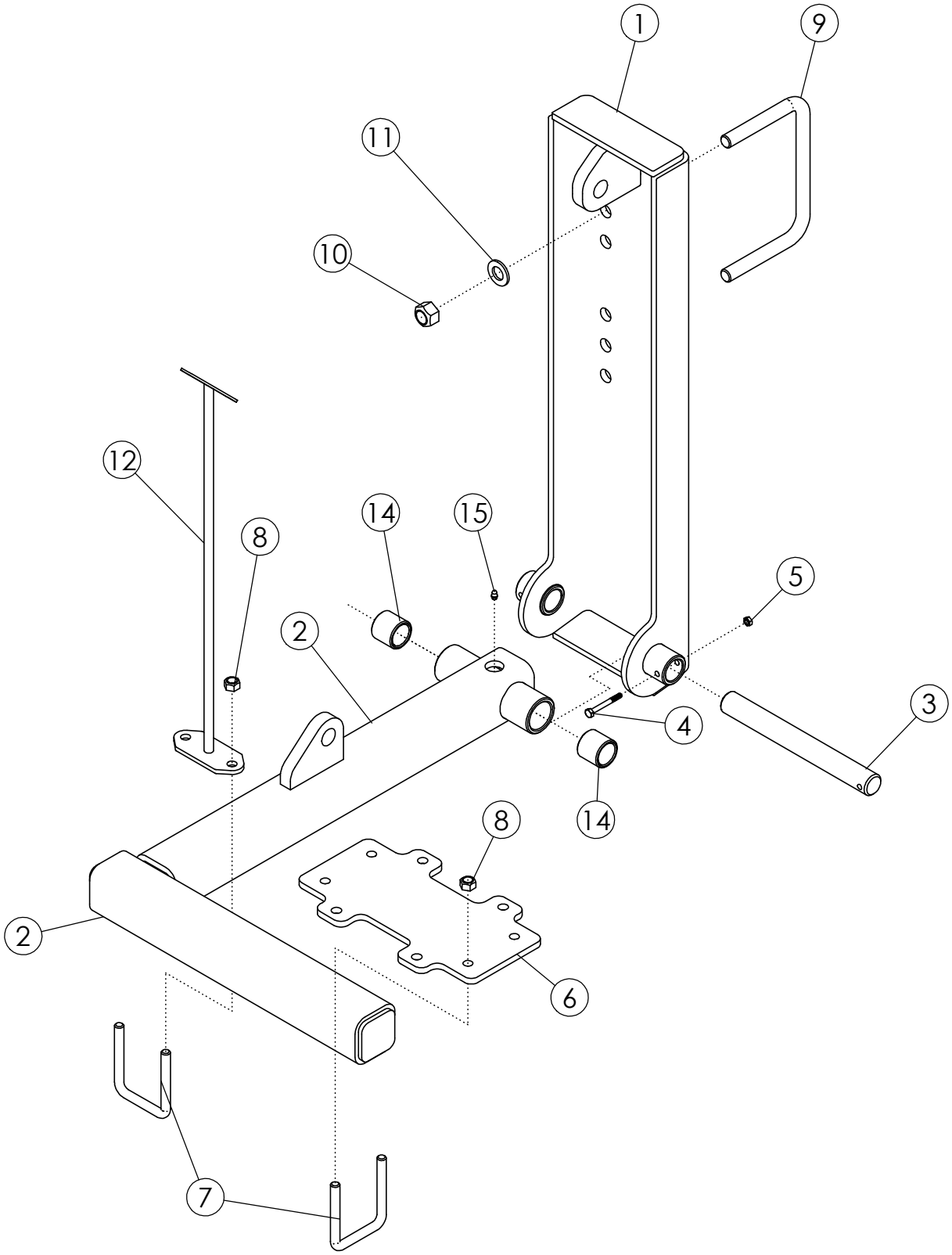
1
9
11
10
12
14
15
8
5
2
3
4
14
8
2
6
7

ASSY - DEF ROW FINDER MOUNT

ITEM	PART NO.	DESCRIPTION	QTY
1	305057	WLDMT-ROW FINDER MOUNT UPPER	1
2	305058-1	WLDMT-ROW FINDER LOWER W/ BUSHINGS	1
3	305053	SHAFT-ROW FINDER	1
4	1013942	BOLT-HEX: .25 X 2.25 NC GR5	1
5	1030946	NUT-TOPLOCK: .25 NC GR5 ZP	1
6	305056	PLATE-DEF FR MOUNT (1 ROW)	1
7	69954	U-BOLT: .500 X 4.00 X 3 X 4.00	3
8	1027461	NUT-TOPLOCK: .50 NC GR5 ZP	6
9	56263	U-BOLT: .75 X 5.5 X 8 X 5.5	2
10	1017000	NUT-TOPLOCK: .75 NC GR5 ZP	4
11	1012634	WASHER-FLAT: SAE .75 ZP	4
12	305410	WLDMT-INDICATOR RF FRAME MOUNT	1
13	65332	DECAL-RED/ORANGE FLUORESCENT (NOT SHOWN)	1
14	56939	BUSHING-OILITE: 1.25 X 1.625 X 1.5L	2
15	1011748	ZERK-GREASE: .25 UNF STRAIGHT	1

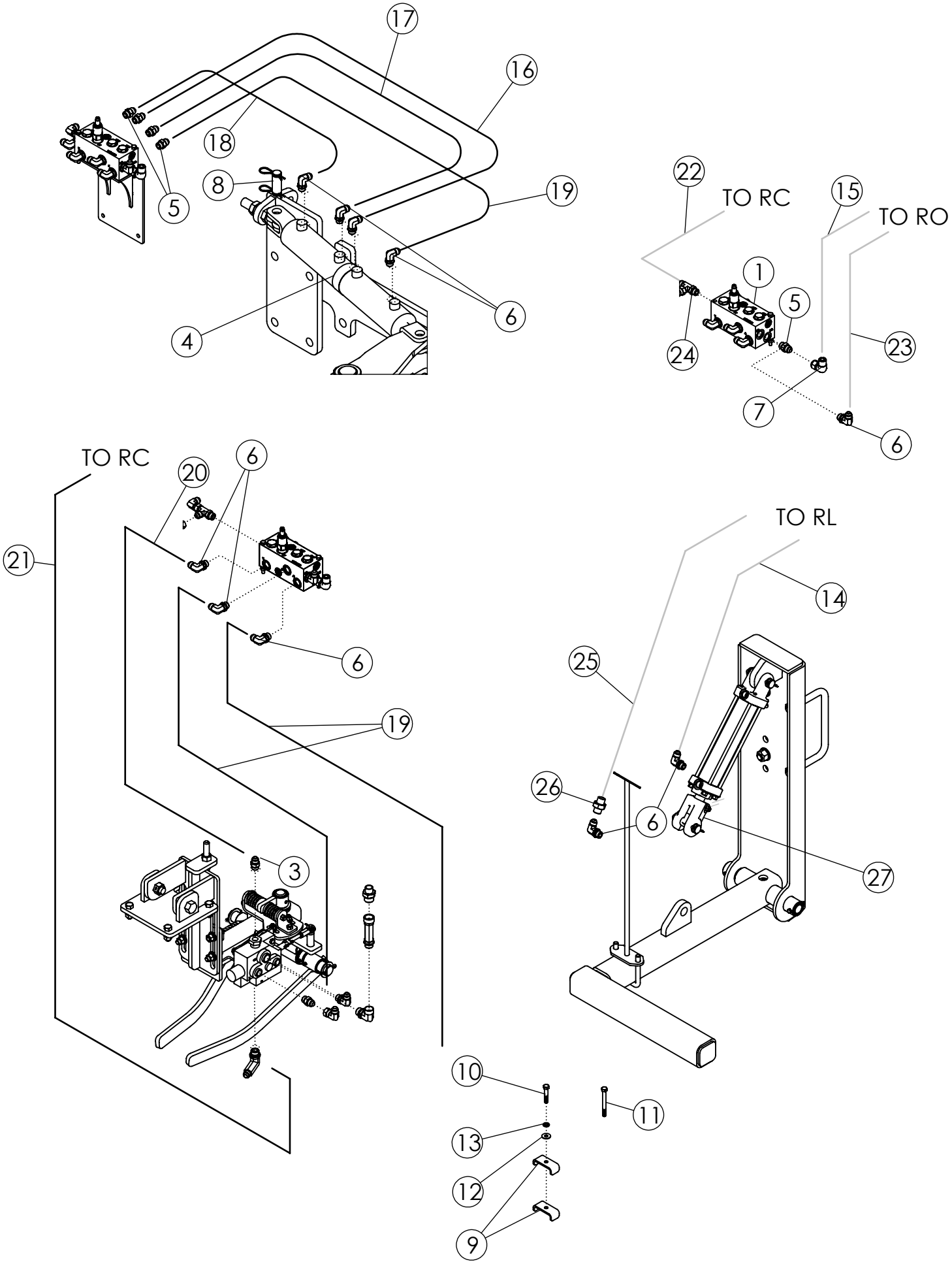
17
16
18
5
8
19
4
6
22
TO RC
15
TO RO
1
5
24
23
7
6
TO RC
20
6
21
6
19
3
TO RL
14
25
26
6
27
10
11
13
12
9

ROW FINDER HYDRAULICS - FRAME MOUNTED

ITEM	PART NO.	DESCRIPTION	QTY
1	69999	VALVE-DEF ROWFINDER RETURN	1
2	65901	FTG-ELBOW: 10MB-8MJ-90	1
3	58195	FTG-ADAPTER: 10MB-8MJ	1
4	69200	CYLINDER-HYD 3 X 4 4PORT 23.5 CLOSED	1
	305293	SEAL KIT 2015 AND NEWER	
5	56226	FTG-ADAPTER: 8MB-8MJ	6
6	58560	FTG-ELBOW: 8MB-8MJ 90	12
7	57668	FTG-ELBOW: 8MJ-8FJX 90	1
8	69167	PIN-CLYNDER W/CLIPS 1.00 X 2.25	2
9	50714	CLAMP .50" ZP	10
10	1011603	BOLT-HEX: .38 X 1.75 NC GR5 ZP	1
11	1013239	BOLT-HEX: .38 X 3.00 NC GR5 ZP	4
12	1014608	WASHER-FLAT: SAE .38 ZP	5
13	1011586	WASHER-LOCK: .38 ZP	5
14	305426	HOSE: .38 X 30 8FJX-8FJX90	1
	305204	HOSE: .50 X 238 X 8MB-8FJX	
15	305203	HOSE: .50 X 236 8MB-8FJX90L	1
16	305043	HOSE: .50 X 86 8FJX-8FJX90 (6R/8R)	1
	69564	HOSE: .50 X 108 8FJX-8FJX90 (9R/12R)	
17	305044	HOSE: .50 X 086 X 8FJX-8FJX90L (6R/8R)	1
	69565	HOSE: .50 X 108 8FJX-8FJX90L (9R/12R)	
18	305045	HOSE: .50 X 092 X 8FJX-8FJX90L (6R/8R)	1
	69566	HOSE: .50 X 114 8FJX-8FJX90L (9R/12R)	
19	305046	HOSE: .50 X 080 X 8FJX-8FJX90 (6R/8R)	3
	69567	HOSE: .50 X 102 8FJX-8FJX90 (9R/12R)	
20	300254	HOSE: .50 X 076 X 8FJX-8FJX	1
21	305201	HOSE: .50 X 300 X 8MB-8FJX90	1
22	305202	HOSE: .50 X 232 X 8FJX-8MB	1
23	300256	HOSE: .50 X 236 X 8MB-8FJX90	1
24	58515	FTG-ELBOW: 8MB-8MJ-45	1
25	305441	HOSE: .38 X 40 8FJX-8FJX90	1
	305200	HOSE: .50 X 245 X 8MB-8FJX	
26	1019844	FTG-RESTRICTOR 8FJ-8MJ .090	1
27	321936	CYLINDER 2 X 8	1

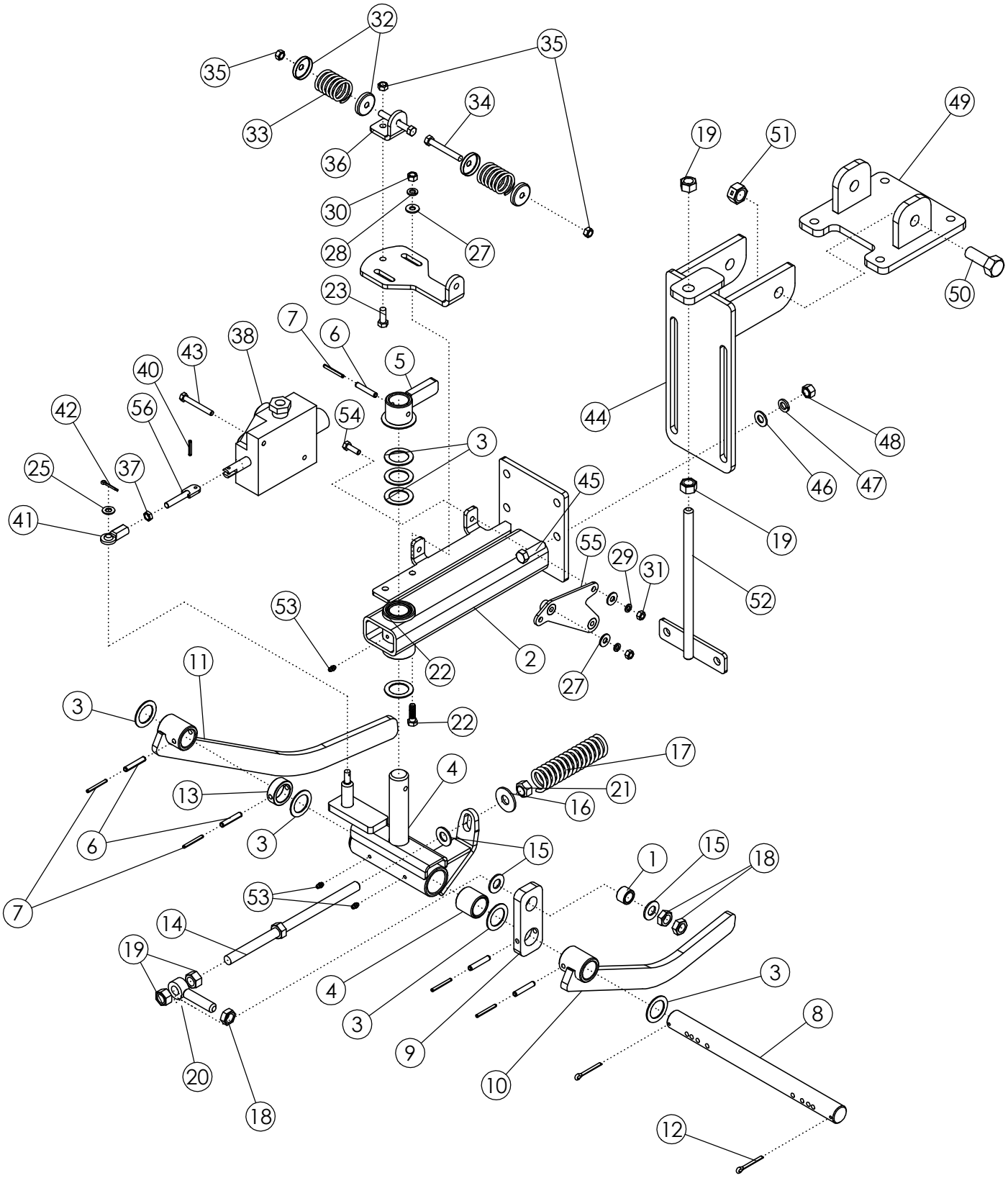
32
35
35
33
34
36
49
19
51
30
28
27
50
23
7
6
38
43
5
40
42
56
54
44
48
3
25
37
45
46
47
41
19
55
29
31
52
53
2
22
27
11
3
22
17
4
13
21
16
6
3
15
1
15
18
7
53
14
19
4
3
3
8
9
20
10
18
12

HYDRAULIC ROW FINDER

ITEM	PART NO.	DESCRIPTION	QTY
1	52567	BUSHING-ZP	1
2	62520	ASSY-MAIN FRAME	1
3	55206	BUSHING-MACH: 1.25 NR 14GA	9
4	51139	ASSY - SWIVEL	1
5	51130	WLDMT-FLIPPER	1
6	1030793	PIN-ROLL: .31 X 1.75 ZP	5
7	1030798	PIN-ROLL: .19 X 1.75 ZP	5
8	51690	SHAFT ZP	1
9	52566	TENSIONER ARM	1
10	51131	SENSOR ARM-L.H.	1
11	52564	SENSOR ARM-R.H.	1
12	1030797	PIN-COTTER: .19 X 1.75 NP	2
13	51137	COLLAR	1
14	52565	ADJUSTMENT BOLT	1
15	1013004	WASHER-FLAT: SAE .63 ZP	3
16	1013024	WASHER-FLAT: .63 ZP	2
17	51692	SPRING: .21 X 1.44 OD X 6.00 15 COILS	1
18	1026259	NUT-JAM: .63 NC GR2 ZP	3
19	1011578	NUT-HEX: .63 NC GR2 ZP	4
20	51691	EYEBOLT: .63 X 3.25 ZP	1
21	1016595	NUT-TOPLOCK: .63 NC GR5 ZP	1
22	1011601	BOLT-HEX: .38 X 1.25 NC GR5 ZP	2
23	1011600	BOLT-HEX: .38 X 1.00 NC GR5 ZP	1
24	51129	PLATE	1
25	1014608	WASHER-FLT: SAE .38 ZP	1
26	1020416	WASHER-FLAT: .25 ZP	2
27	1011583	WASHER-FLAT: .31 ZP	2
28	1011586	WASHER-LOCK: .38 ZP	2
29	1029115	WASHER-LOCK: .31 ZP	2
30	1011576	NUT-HEX: .38 NC GR2 ZP	2
31	1011575	NUT-HEX: .31 NC GR2 ZP	2
32	52582	SPRING CAP	4
33	51689	SPRING	2
34	1019828	BOLT-HEX: .38 X 2.75 NC GR5 ZP	2
35	1016999	NUT-TOPLOCK: .38 NC GR5 ZP	3
36	51128	SPRING PLATE	1
37	1030792	NUT-JAM: .38 NF GR2 ZP	1
38	306698	VALVE-ROWFINDER POWER BEYOND	1
39	62540	PLATE STUD ZP	1
40	64157	PIN-ROLL: .19 X 1.125 ZP	1

CONTINUED

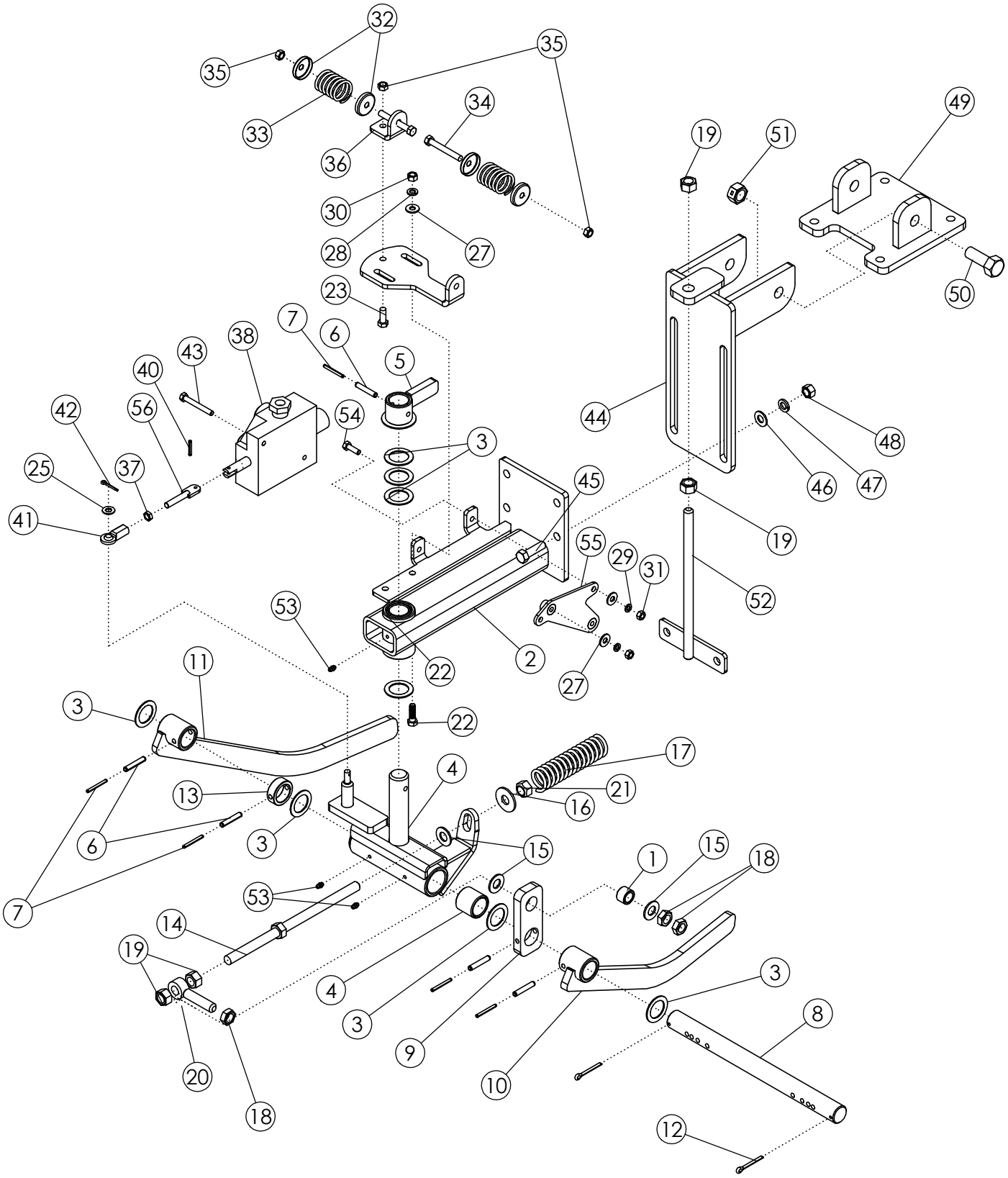
32
35
35
33
34
36
49
19
51
30
28
27
50
23
7
6
38
43
5
40
42
56
54
44
48
3
25
37
45
46
47
41
19
55
29
31
52
53
2
22
27
11
3
22
17
4
13
21
16
6
3
15
1
15
18
7
53
14
19
4
3
3
8
9
20
10
18
12

HYDRAULIC ROW FINDER (CONTINUED)			
ITEM	**PART NO.**	**DESCRIPTION**	**QTY**
41	51136	UNIBALL COUPLING	1
42	1029137	PIN-COTTER: .13 X 1.00 ZP	1
43	1027258	BOLT-HEX: .31 X 2.50 NC GR5 ZP	2
44	52181	MOUNTING BRACKET	1
45	1011608	BOLT-HEX: .50 X 1.75 NC GR5 ZP	4
46	1011584	WASHER-FLAT: SAE .50 ZP	4
47	1011581	WASHER-LOCK: .50 ZP	8
48	1011577	NUT-HEX: .50 NC GR2 ZP	8
49	62871	WLDMT-BRACKET	1
50	1012060	BOLT-HEX: .75 X 2.00 NC GR5 ZP	2
51	1013537	NUT-TOPLOCK: .75 NC GR5 ZP	2
52	62882	TIGHTENER BOLT-ZP	1
53	1011748	ZERK - GREASE	3
54	1011598	BOLT-HEX: .31 X 1.00 NC GR5 ZP	2
55	306854	WLDMT-R/F MNT PB	1
56	301750	WLDMT-STUD RF LONG ZP	1

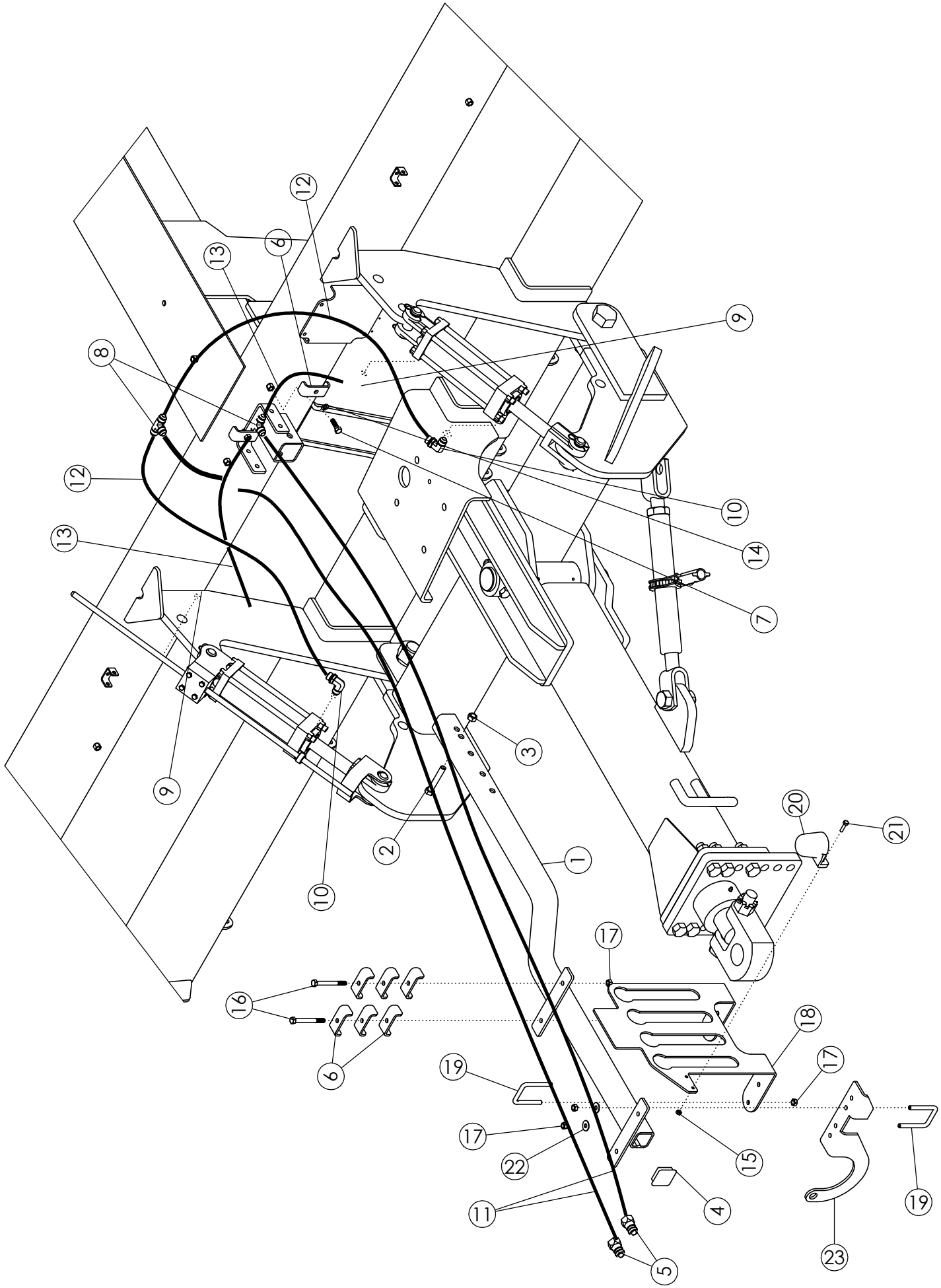
1
2
3
4
5
6
7
8
9
10
11
12
13
14
15
16
17
18
19
20
21
22
23

HITCH HYDRAULICS

ITEM	PART NO.	DESCRIPTION	QTY
1	301210	WLDMT-HYD HOSE HOLDER	1
2	1011611	BOLT-HEX: .50 X 3.00 NC GR5 ZP	1
3	1027461	NUT-TOPLOCK: .50 NC GR5 ZP	1
4	301129	CAPLUG-2" SQ .188 WA	1
5	36290	PIONEER TIP 8010-15 (#8 ORB)	2
6	50714	CLAMP .50 ZP	14
7	1011601	BOLT-HEX: .38 X 1.25 NC GR5 ZP	2
8	57667	FTG-TEE: 8MJ-8MJ-8MJ	2
9	58515	FTG-ELBOW: 8MB-8MJ-45	2
10	58560	FTG-ELBOW: 8MB-8MJ-90	2
11	300053	HOSE: .50 X 108 8MB-8FJX	2
12	57000	HOSE .50 X 34 8FJX-8FJX	2
13	44174	HOSE: .50 X 24 8FJX-8FJX	2
14	1011586	WASHER-LOCK: .38 ZP	2
15	1030946	NUT-TOPLOCK: .25 NC GR5 ZP	2
16	58176	BOLT-HEX: .38 X 3.50 NC GR5 ZP	4
	1015174	BOLT-HEX: .38 X 2.50 NC GR5 ZP	
17	1016999	NUT-TOPLOCK: .38 NC GR5 ZP	8
18	301900	PLATE-HYD HOSE HOLDER PIONEER TIP	1
19	33162	U-BOLT: .375 X 3 X 2 X 3	3
20	223329	HOLDER-LIGHT PLUG	1
21	1013423	BOLT-HEX: .25 X 1.00 NC GR5 ZP	2
22	1011828	WASHER-FLAT: .38 ZP	2
23	303417	PLATE-PTO STORAGE	1

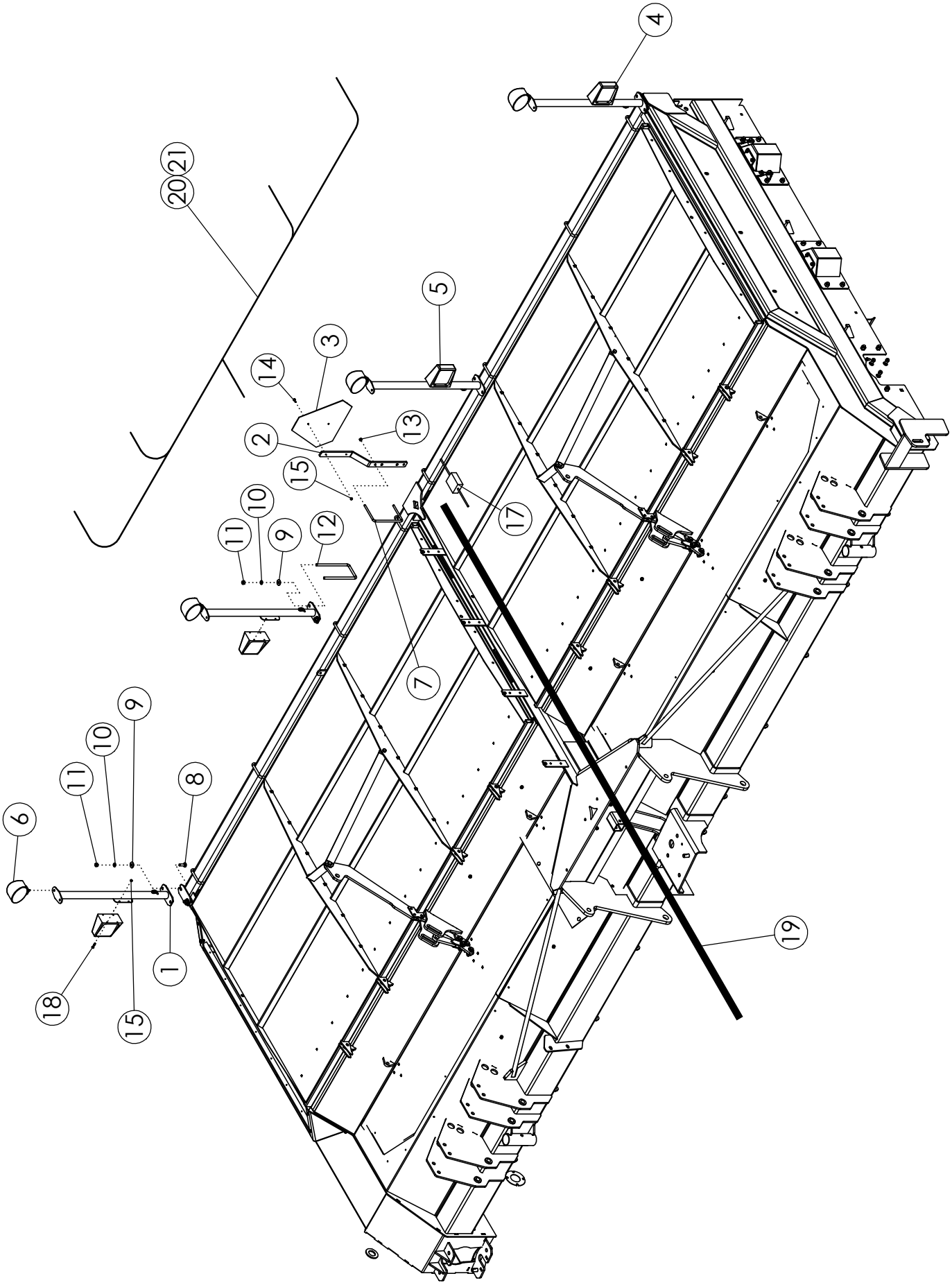
4
20
21
5
3
14
2
13
15
10
11
9
12
17
7
9
10
11
8
6
1
18
15
19

LIGHT KIT

ITEM	PART NO.	DESCRIPTION	QTY
1	305219	WLDMT-LIGHT MOUNT	4
2	64246	MOUNT-SMV SIGN	1
3	65329	SIGN-SMV ASAE	1
4	305217	LIGHT-YELLOW LAMP SAE	2
5	305218	LIGHT-RED LAMP SAE	2
6	301294	LIGHT-GROTE T26 NEAR FLOOD	4
7	64244	U-BOLT: .375 X 5.125 X 8.063 X 5.125	1
8	1011660	BOLT-CRG: .50 X 1.50 NC GR5 ZP	4
9	1014443	WASHER-FLAT: .50 ZP	8
10	1011581	WASHER-LOCK: .50 ZP	8
11	1011577	NUT-HEX: .50 NC ZP	8
12	63458	U-BOLT: .50 X 9.25 X 4.00 X 9.25 ZP	2
13	1016999	NUT-TOPLOCK: .38 NC GR5 ZP	2
14	1011595	BOLT-HEX: .25 X .75 NC GR5 ZP	2
15	1030946	NUT-TOPLOCK: .25 NC GR5 ZP	18
16	1013122	TIE-NYLON CABLE 50# X 15.50" (NOT SHOWN)	12
17	305216	MODULE-FLASHER HARNESS	1
18	1013940	BOLT-HEX: .25 X 1.25 NC GR5	16
19	305213	HARNESS-DEF LIGHT LEAD	1
20	305214	HARNESS-DEF WORK LIGHT	1
21	305215	HARNESS-DEF LGIHT	1

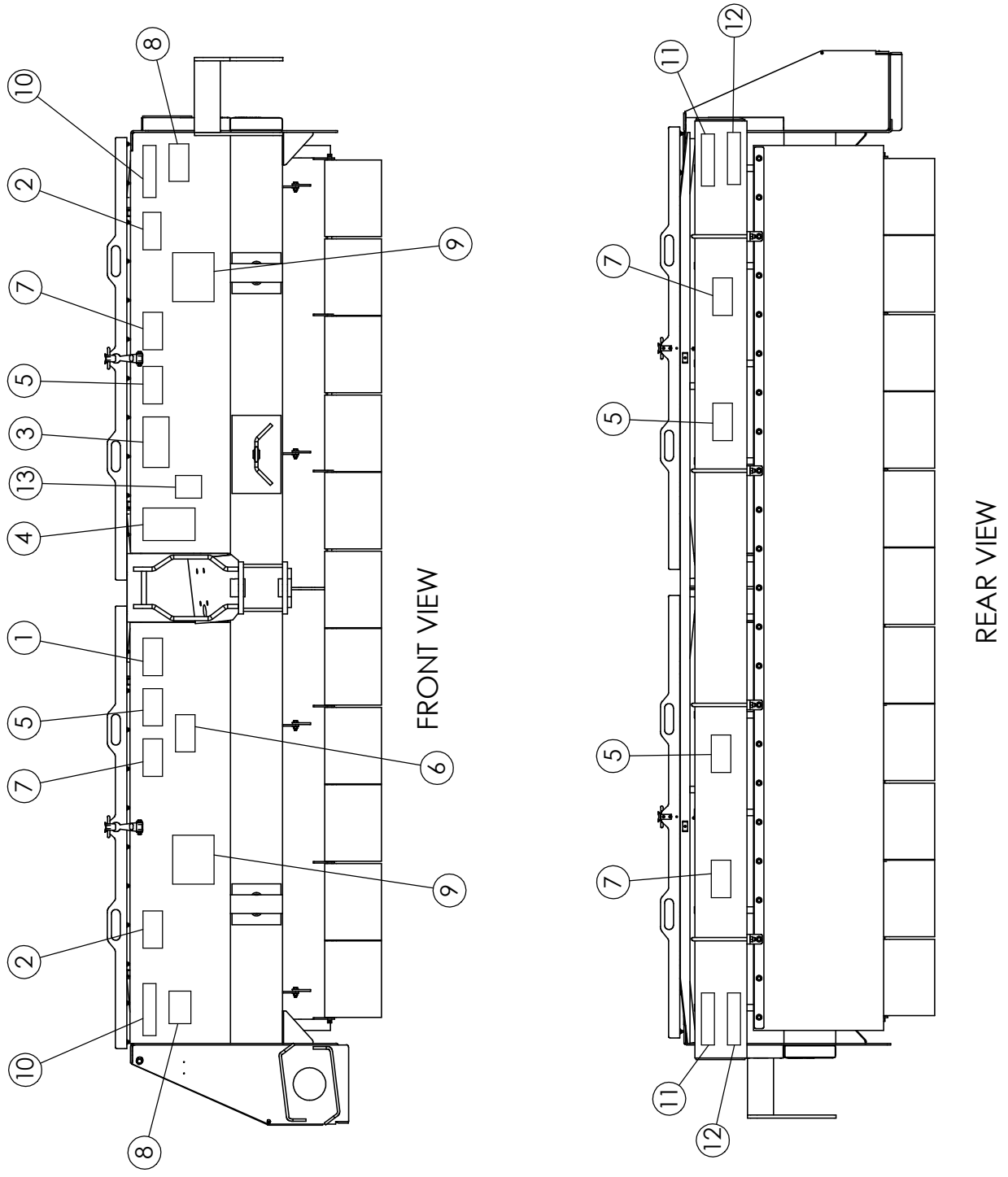
10
8
2
7
5
3
13
4
1
5
7
2
10
8
9
6
9
FRONT VIEW
11
12
7
5
5
7
11
12
REAR VIEW

DECALS			
ITEM	**PART NO.**	**DESCRIPTION**	**QTY**
1	52341	DECAL-WARNING SHIELDS	1
2	52334	DECAL-WARNING NO RIDE	2
3	52329	DECAL-DANGER MOVING PARTS	1
4	52339	DECAL-WARNING OPERATION	1
5	52340	DECAL-DANGER	4
6	52338	DECAL DANGER ROTATION	1
7	52336	DECAL-CAUTION	4
8	64617	DECAL-DANGER CRAWL UNDERNEATH	2
9	63465	DECAL-AMITY LOGO SMALL	2
10	65331	DECAL-RETROFLECTIVE-YELLOW	2
11	65330	DECAL-RETROFLECTIVE-RED	2
12	65332	DECAL-RED ORANGE FLUORESCENT	2
13	62964	DECAL-WARNING HIGH PRESSURE FLUIDS	1

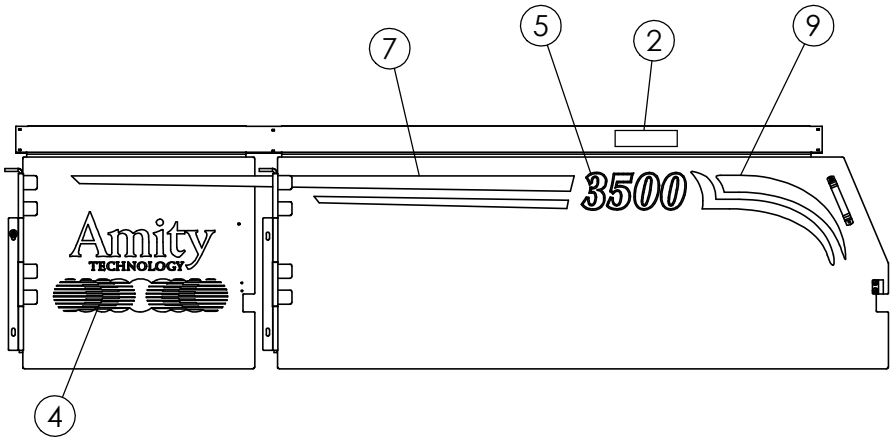

RIGHT SIDE DOOR

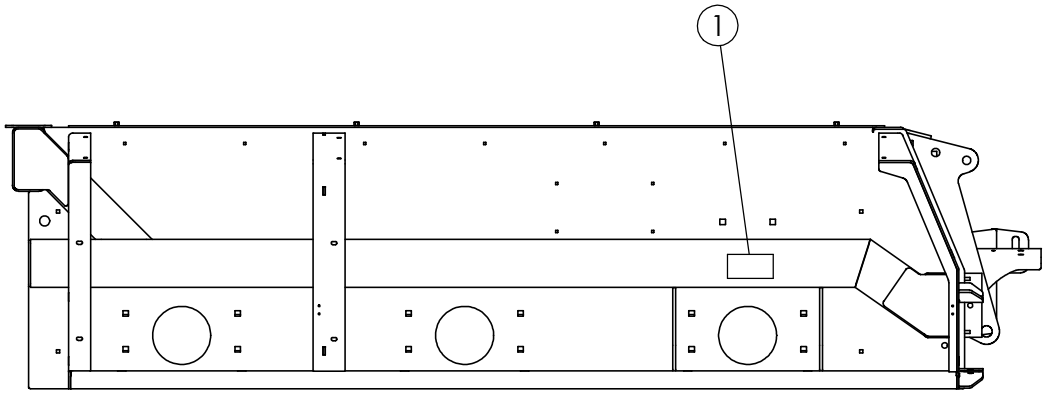

RIGHT SIDE
UNDERNEATH DOOR

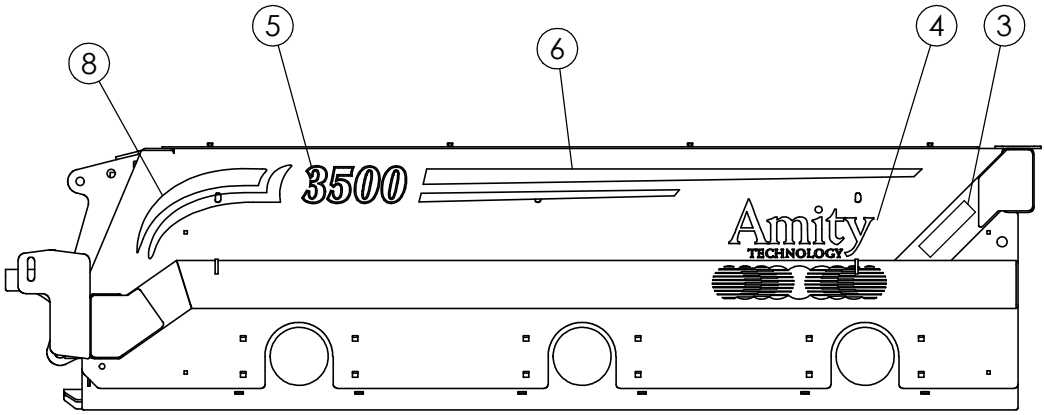

LEFT SIDE

DECALS			
ITEM	**PART NO.**	**DESCRIPTION**	**QTY**
1	52341	DECAL-WARNING SHIELDS	1
2	52329	DECAL-DANGER MOVING PART	1
3	65331	DECAL-YELLOW RETROFLECTIVE	2
4	69399	DECAL-AMITY LOGO 12X24	2
5	69400	DECAL-3300 6X12 (6R22,4R30)	2
	69402	DECAL-3500 6X12 (8R22, 6R30)	
	69403	DECAL-3600 6X12 (9R)	
	69404	DECAL-3700 6X12 (12R22, 8R30)	
	305692	DECAL-3750 6X12	
6	69406	DECAL-LH STRIPE	1
7	69408	DECAL-RH STRIPE	1
8	69405	DECAL-LH CURVE	1
9	69407	DECAL-RH CURVE	1

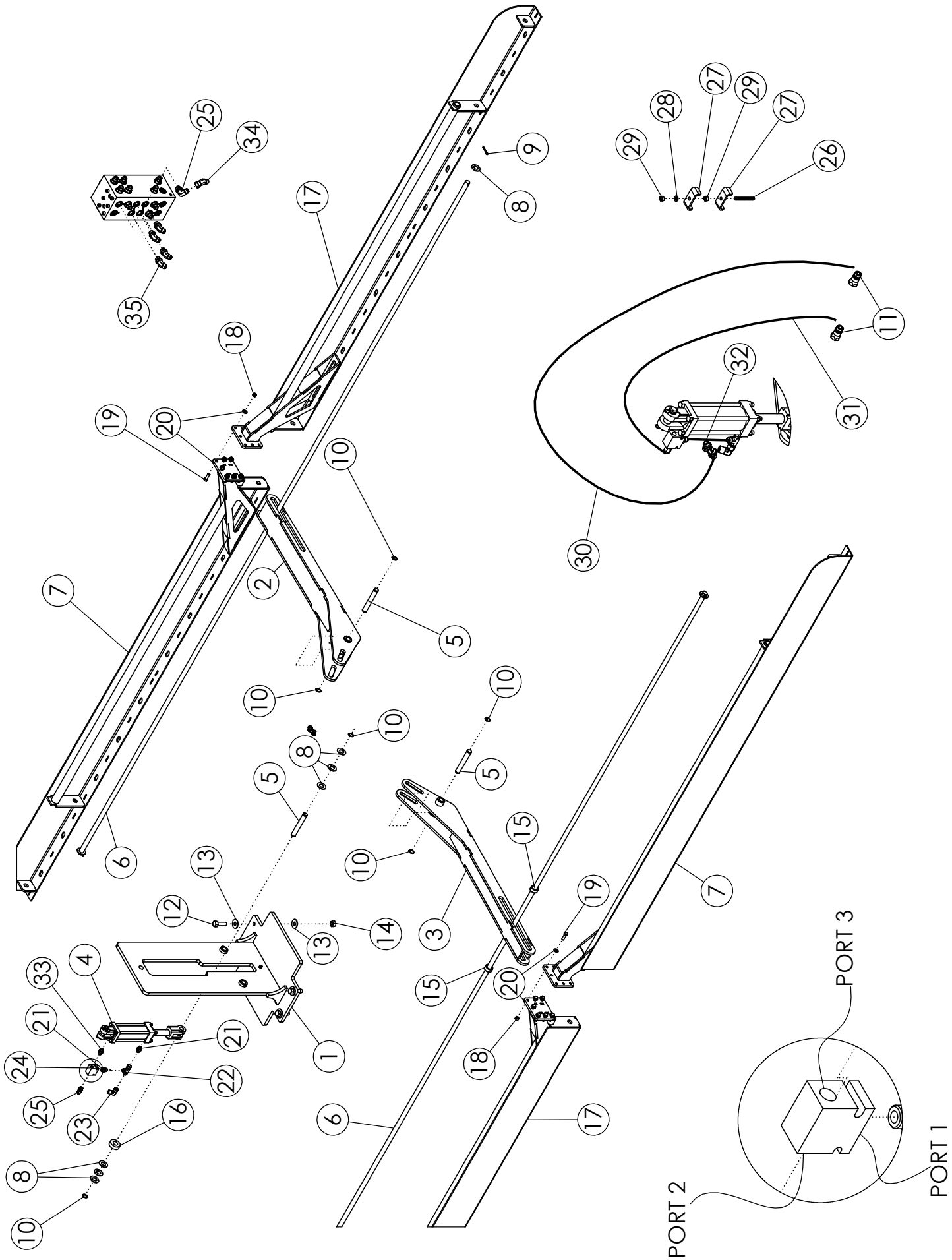
PORT 1
PORT 2
PORT 3

ASSY-TOP DOOR LIFT - 8 ROW

ITEM	PART NO.	DESCRIPTION	QTY
1	305357	WLDMT-DEF TOP DOOR TOWER	1
2	305361	WLDMT-DEF TOP DOOR ARMS REAR	1
3	305364	WLDMT-DEF TOP DOOR ARMS FRONT	1
4	58890	CYLINDER HYDRAULIC 3 X 8	1
	301314	SEAL KIT 3 X 8 3000PSI UNIVERSAL	
5	305380	PIN-DEF TOP DOOR TOWER	3
6	305390	ROD-DEF TOP DOOR ROLLER SHAFT 8R	2
7	305385	WLDMT-DEF TOP DOOR WING A 8R	2
8	1016663	WASHER-FLAT: SAE 1.00 ZP	10
9	1016944	PIN-COTTER: .25 X 2.00 ZP	4
10	36430	RING-RETAINING 1.000 ZP	6
11	36290	PIONEER TIP 8010-15P (#8 ORB)	2
12	1016598	BOLT- .75 X 2.50 NC GR5 ZP	4
13	1030702	WASHER-FLAT .75 ZP	8
14	1017000	NUT-TOPLOCK: .75 NC GR5 ZP	4
15	305379	BUSHING-DEF TOP DOOR WING FRONT ZP	2
16	305381	PLATE-CYLINDER ROLLER ZP	1
17	305387	WLDMT-DEF TOP DOOR WING B 8R	2
18	1027461	NUT-TOPLOCK: .50 NC GR5 ZP	14
19	1011607	BOLT-HEX: .50 X 1.50 NC GR5 ZP	14
20	1032505	WASHER-FLAT: SAE .50 GR8 ZP	28
21	56226	FTG-ADAPTER: 8MB-8MJ	2
22	63015	FTG-TEE: 8MJ-8FJX-8MJ	1
23	1015801	FTG-ELBOW: 8MJ-8FJX 90	1
24	305404	VALVE-CHECK SINGLE PILOT OPERATED	1
25	58560	FTG-ELBOW: 8MB-8MJ-90	2
26	65379	STUD-.375 X 3.00 UNC ZP	1
27	50714	CLAMP .50 ZP	2
28	1011586	WASHER-LOCK: .38 ZP	1
29	1011576	NUT-HEX: .38 NC GR2 ZP	2
30	305394	HOSE: .38 X 176 8MB-8FJX	1
31	305395	HOSE: .38 X 186 8MB-8FJX	1
32	305345	HOSE: .38 X 8.25 8FJX-8FJX	1
33	305343	FTG-ADAPTER: 8MB-8MB	1
34	57663	FTG-ELBOW: 8MJ-8FJX-45	1
35	58515	FTG-ELBOW: 8MB-8MJ-45	4

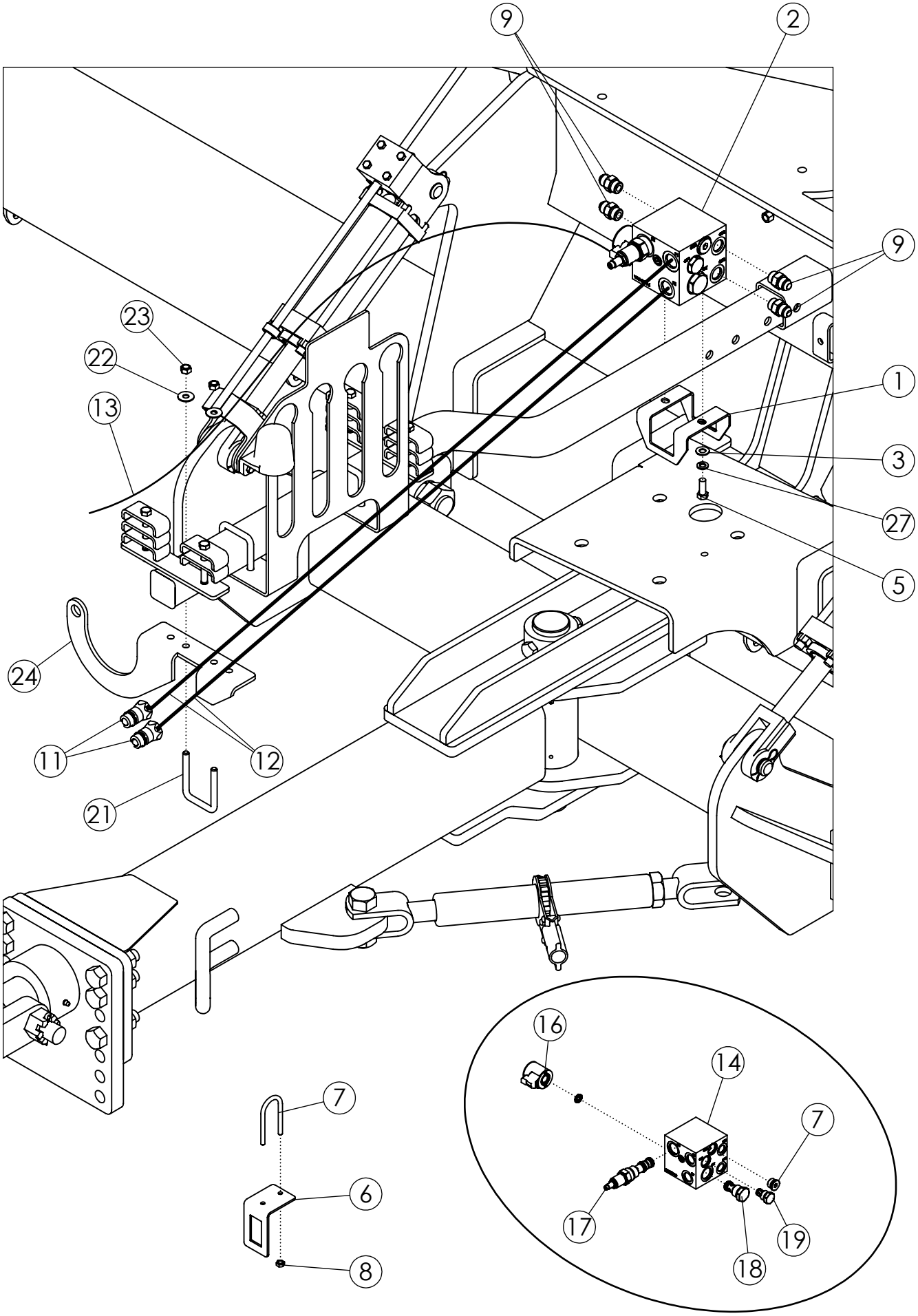
9
2
9
23
22
13
1
3
27
5
24
11
12
21
16
14
7
7
6
17
19
18
8

FLOATING HITCH KIT

ITEM	PART NO.	DESCRIPTION	QTY
1	305430	PLATE-VALVE MOUNT	1
2	305791	FLOATING HITCH VALVE	1
3	1014608	WASHER-FLT: SAE .38 ZP	2
4	1011586	WASHER-LOCK: .38 ZP	2
5	1011600	BOLT-HEX: .38 X 1.00 NC GR5 ZP	2
6	305792	PLATE-SWITCH BRACKET	1
7	340068	U-BOLT: RND .25 X 1.25 X 2.25 ZP	1
8	1030946	NUT-TOPLOCK: .25 NC GR5 ZP	1
9	56226	FTG-ADAPTER: 8MB-8MJ	4
10	305793	ASSY-SWITCH SPST ONE RED LIGHT (NOT SHOWN)	1
11	36290	PIONEER TIP 8010-16P (#10 ORB)	2
12	305431	HOSE: .63 X 108 10MB-10MB	2
13	305440	HARNESS-FLOATING HITCH	1
21	33162	U-BOLT: .375 X 3.00 X 2.00 X 3.00	1
22	1011828	WASHER-FLAT: .38 ZP	2
23	1016999	NUT-TOPLOCK: .38 NC GR5 ZP	2
24	303417	PLATE-PTO STORAGE	1
		INCLUDED IN ITEM 2 305791	
14	306714	BLOCK-RAISE/LOWER HITCH	1
15	306715	VALVE-#12 SOLENOID, NC POPPET	1
16	306716	E-COIL-#10, 12 VDC, DEUTSCH DT04-2P, ZENER	1
17	306717	VALVE-#12 PRESSURE REDUCING RELIEVING, PILC	1
18	306718	VALVE-#12 CHECK 5 PSI	1
	306990	KT-SEAL FOR 306718	
19	306719	PLUG-#10 CAVITY	1
	306991	KT-SEAL FOR 306719	
20	306720	PLUG-SAE-10 HOLLOW HEX	1

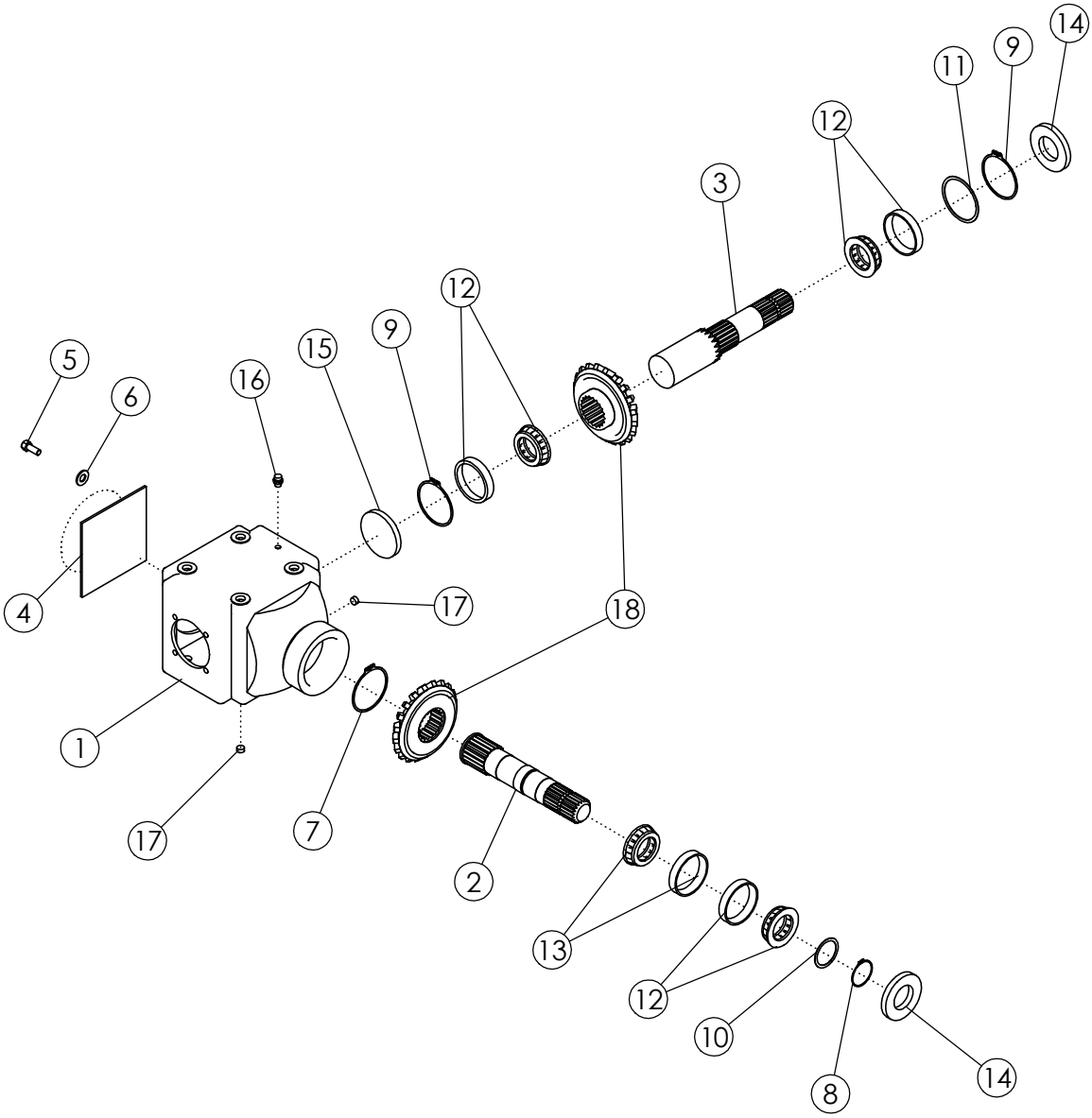
14
9
11
12
3
12
9
15
16
6
5
4
17
18
1
17
7
2
13
12
10
8
14

GEARBOX L-TYPE

ITEM	PART NO.	DESCRIPTION	QTY
--	**68065**	**GEARBOX-S2125 1.35:1 L**	**-**
1	68181	HOUSING	1
2	68182	SHAFT	1
3	68183	INPUT SHAFT	1
4	68184	SLEEVE	1
5	68185	SCREW-BOLT HEX M10 X 25 CL8.8	8
6	68186	WASHER	8
7	52521	SNAP RING: EXTERNAL	1
8	54209	SNAP RING	1
9	54210	SNAP RING	2
10	54218	SPACER RING - - .012 PER M THICKNESS	AR
	54219	SPACER RING - - .016 PER M THICKNESS	
	54220	SPACER RING - - .024 PER M THICKNESS	
	54221	SPACER RING - - .032 PER M THICKNESS	
	54222	SPACER RING -- .040 PER M THICKNESS	
	64421	KIT-SPACER RING (INCLUEDES SPACERS IN ITEM 10)	
11	54223	SPACER RING - - .012 PER M THICKNESS	AR
	54224	SPACER RING - - .016 PER M THICKNESS	
	54225	SPACER RING - - .024 PER M THICKNESS	
	54226	SPACER RING - - .032 PER M THICKNESS	
	59958	SPACER RING - - 1.00 PER M THICKNESS	
	64422	KIT-SPACER RING (INCLUEDES SPACERS IN ITEM 11)	
12	54212	BEARING ROLLER	3
13	68187	BEARING ROLLER	1
14	54214	SEALING RING	2
15	54217	CLOSING CAP	1
16	54204	VENT PLUG	1
17	54215	OIL PLUG	5
18	68188	BEVEL GEAR SET*	1
		*SET INCLUDES GEAR CROWN & GEAR PINNION	

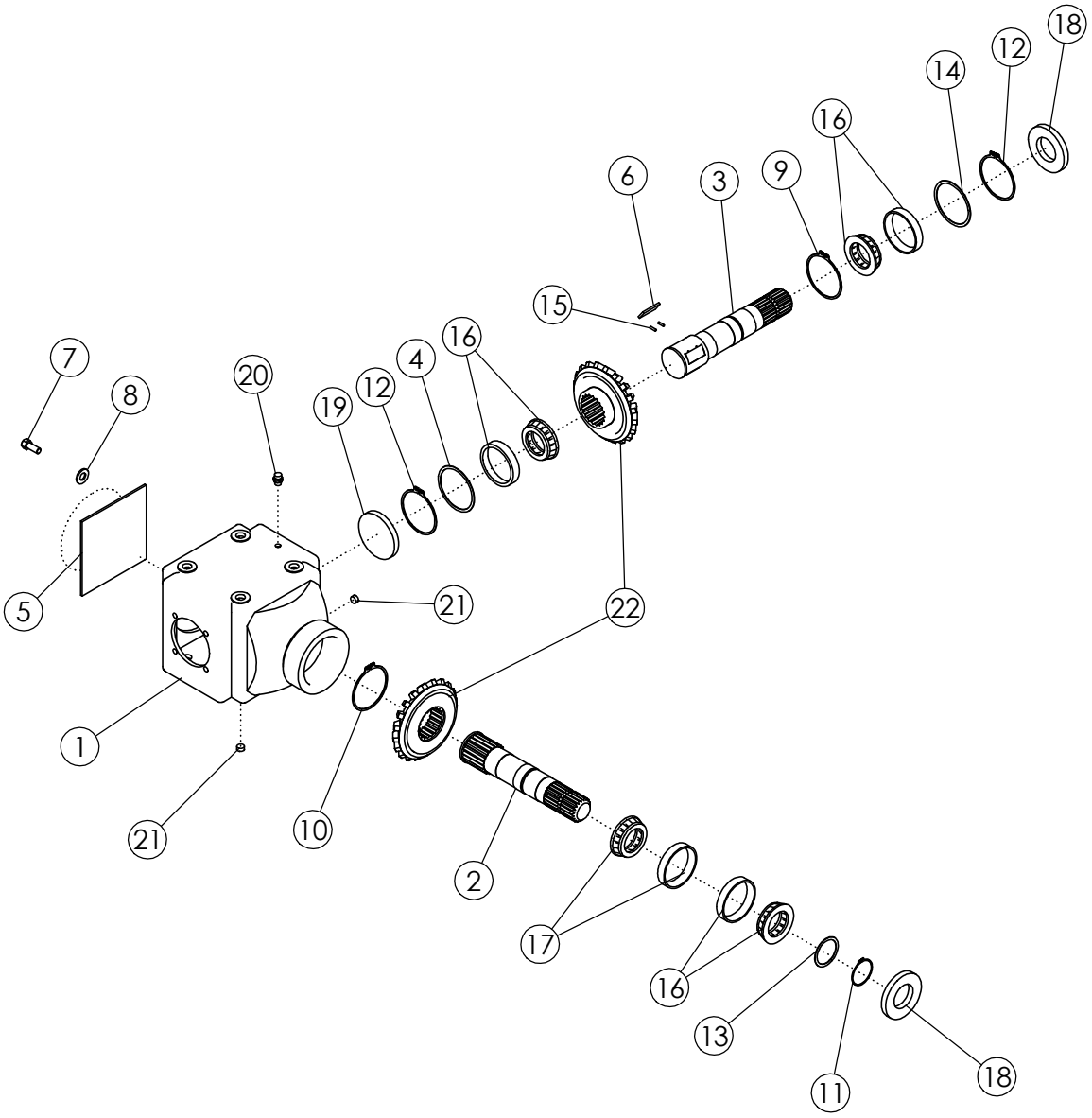
18
12
14
16
6
3
9
15
16
4
12
20
19
7
8
5
21
22
1
21
10
2
17
16
13
11
18

GEARBOX L-TYPE WITH OVERRUN

ITEM	PART NO.	DESCRIPTION	QTY
--	68066	GEARBOX-S2125 1.35:1 L W/OVER RUN CLUTCH	-
1	68181	HOUSING	1
2	68182	SHAFT	1
3	68189	SHAFT-OUTPUT	1
4	68190	SLEEVE	1
5	68184	SLEEVE	1
6	68191	PLUG	6
7	68185	SCREW-BOLT HEX M10 X 25 CL8.8	8
8	68186	WASHER	8
9	68196	SNAP RING-EXTERNAL	1
10	52521	SNAP RING: EXTERNAL	1
11	54209	SNAP RING	1
12	54210	SNAP RING	2
13	54218	SPACER RING - - .012 PER M THICKNESS	AR
	54219	SPACER RING - - .016 PER M THICKNESS	
	54220	SPACER RING - - .024 PER M THICKNESS	
	54221	SPACER RING - - .032 PER M THICKNESS	
	54222	SPACER RING -- .040 PER M THICKNESS	
	64421	KIT-SPACER RING (INCLUEDES SPACERS IN ITEM 10)	
14	54223	SPACER RING - - .012 PER M THICKNESS	AR
	54224	SPACER RING - - .016 PER M THICKNESS	
	54225	SPACER RING - - .024 PER M THICKNESS	
	54226	SPACER RING - - .032 PER M THICKNESS	
	59958	SPACER RING - - 1.00 PER M THICKNESS	
	64422	KIT-SPACER RING (INCLUEDES SPACERS IN ITEM 11)	
15	59960	SPRING-GEARBOX SHAFT	12
16	54212	BEARING ROLLER	3
17	68187	BEARING ROLLER	1
18	54214	SEALING RING	2
19	54217	CLOSING CAP	1
20	54204	VENT PLUG	1
21	54215	OIL PLUG	5
22	68192	BEVEL GEAR SET*	1
		*SET INCLUDES GEAR CROWN & GEAR PINNION	

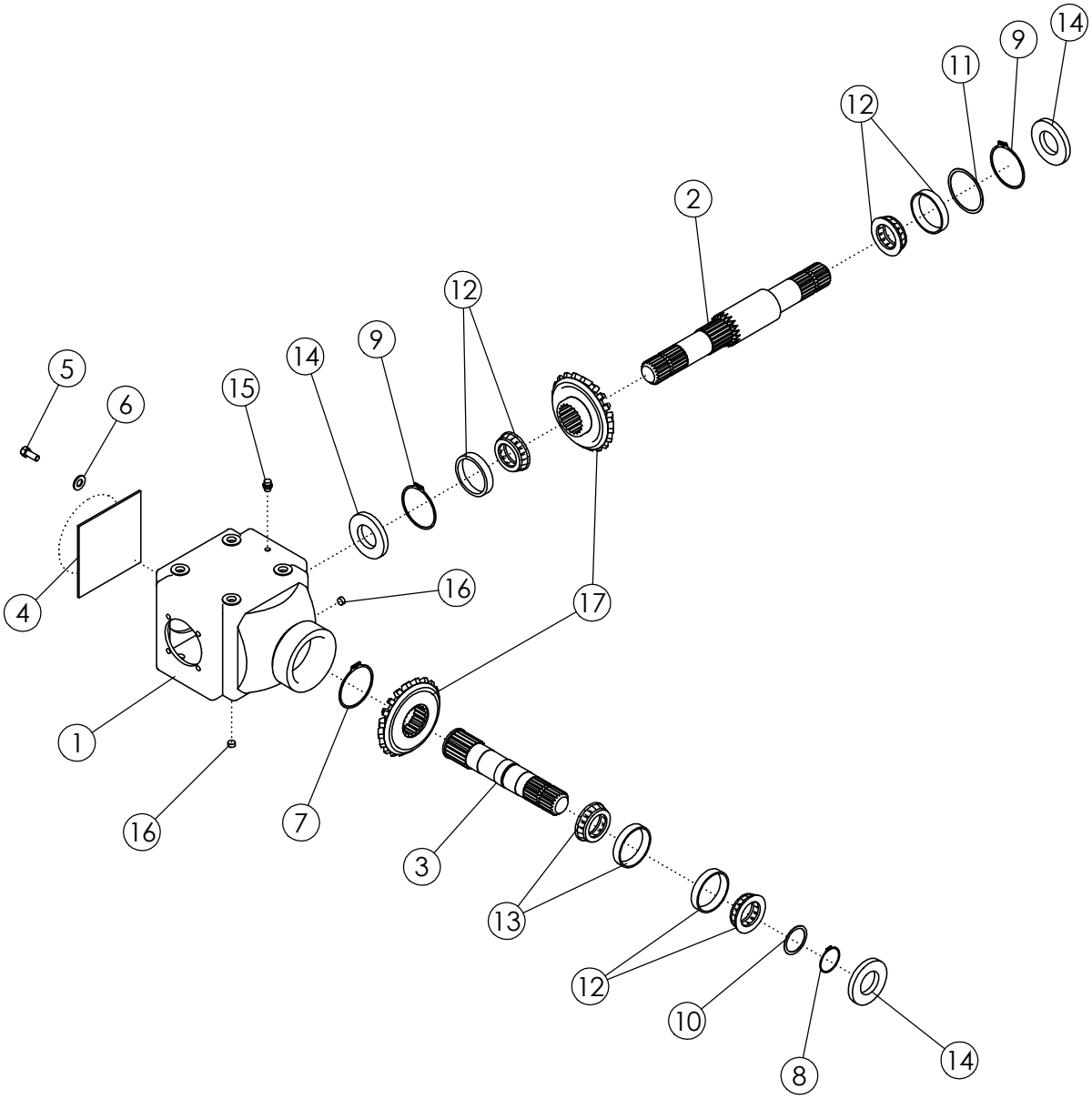
14
9
11
12
2
12
9
14
5
6
15
4
16
17
1
16
7
3
13
12
10
8
14

GEARBOX T-TYPE

ITEM	PART NO.	DESCRIPTION	QTY
--	68067	GEARBOX-S2125 1.35:1 T	-
1	68181	HOUSING	1
2	68193	SHAFT-THRU	1
3	68194	SHAFT	1
4	68184	SLEEVE	1
5	68185	SCREW-BOLT HEX M10 X 25 CL8.8	8
6	68186	WASHER	8
7	52521	SNAP RING: EXTERNAL	1
8	54209	SNAP RING	1
9	54210	SNAP RING	2
10	54218	SPACER RING - - .012 PER M THICKNESS	AR
	54219	SPACER RING - - .016 PER M THICKNESS	
	54220	SPACER RING - - .024 PER M THICKNESS	
	54221	SPACER RING - - .032 PER M THICKNESS	
	54222	SPACER RING -- .040 PER M THICKNESS	
	64421	KIT-SPACER RING (INCLUEDES SPACERS IN ITEM 10)	
11	54223	SPACER RING - - .012 PER M THICKNESS	AR
	54224	SPACER RING - - .016 PER M THICKNESS	
	54225	SPACER RING - - .024 PER M THICKNESS	
	54226	SPACER RING - - .032 PER M THICKNESS	
	59958	SPACER RING - - 1.00 PER M THICKNESS	
	64422	KIT-SPACER RING (INCLUEDES SPACERS IN ITEM 11)	
12	54212	BEARING ROLLER	3
13	68187	BEARING ROLLER	1
14	54214	SEALING RING	2
15	54204	VENT PLUG	1
16	54215	OIL PLUG	5
17	68188	BEVEL GEAR SET*	1
		*SET INCLUDES GEAR CROWN & GEAR PINNION	

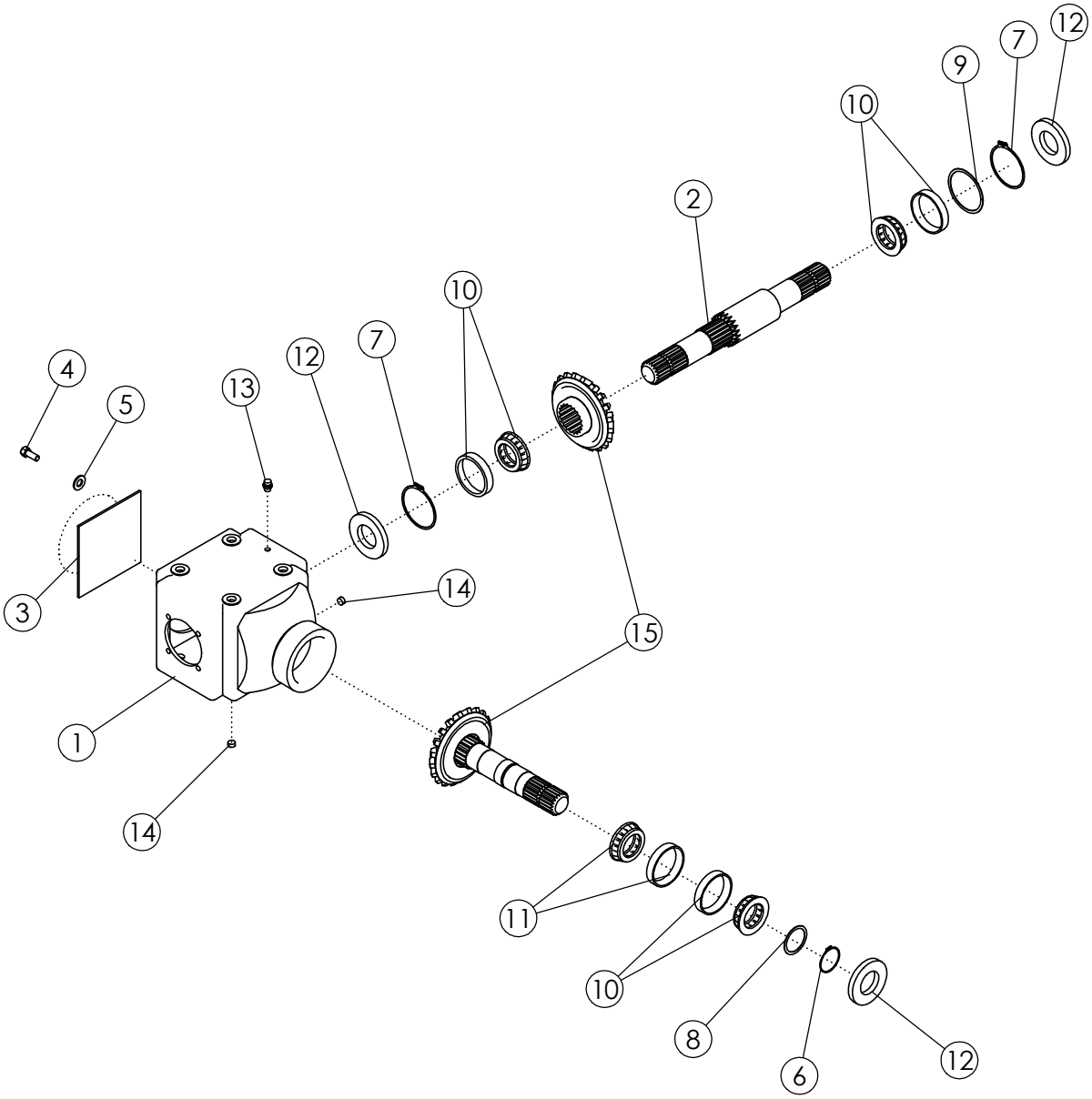
12
7
9
10
2
10
7
12
13
5
4
3
14
15
1
14
11
10
8
6
12

GEARBOX T-TYPE

ITEM	PART NO.	DESCRIPTION	QTY
--	**68068**	**GEARBOX-S2125 1:1.93 T**	**-**
1	68181	HOUSING	1
2	68193	SHAFT-THRU	1
3	68184	SLEEVE	1
4	68185	SCREW-BOLT HEX M10 X 25 CL8.8	8
5	68186	WASHER	8
6	54209	SNAP RING	1
7	54210	SNAP RING	2
8	54218	SPACER RING - - .012 PER M THICKNESS	AR
	54219	SPACER RING - - .016 PER M THICKNESS	
	54220	SPACER RING - - .024 PER M THICKNESS	
	54221	SPACER RING - - .032 PER M THICKNESS	
	54222	SPACER RING -- .040 PER M THICKNESS	
	64421	KIT-SPACER RING (INCLUEDES SPACERS IN ITEM 10)	
9	54223	SPACER RING - - .012 PER M THICKNESS	AR
	54224	SPACER RING - - .016 PER M THICKNESS	
	54225	SPACER RING - - .024 PER M THICKNESS	
	54226	SPACER RING - - .032 PER M THICKNESS	
	59958	SPACER RING - - 1.00 PER M THICKNESS	
	64422	KIT-SPACER RING (INCLUEDES SPACERS IN ITEM 11)	
10	54212	BEARING ROLLER	3
11	68187	BEARING ROLLER	1
12	54214	SEALING RING	2
13	54204	VENT PLUG	1
14	54215	OIL PLUG	5
15	68195	BEVEL GEAR SET*	1
		*SET INCLUDES GEAR CROWN & GEAR PINNION	

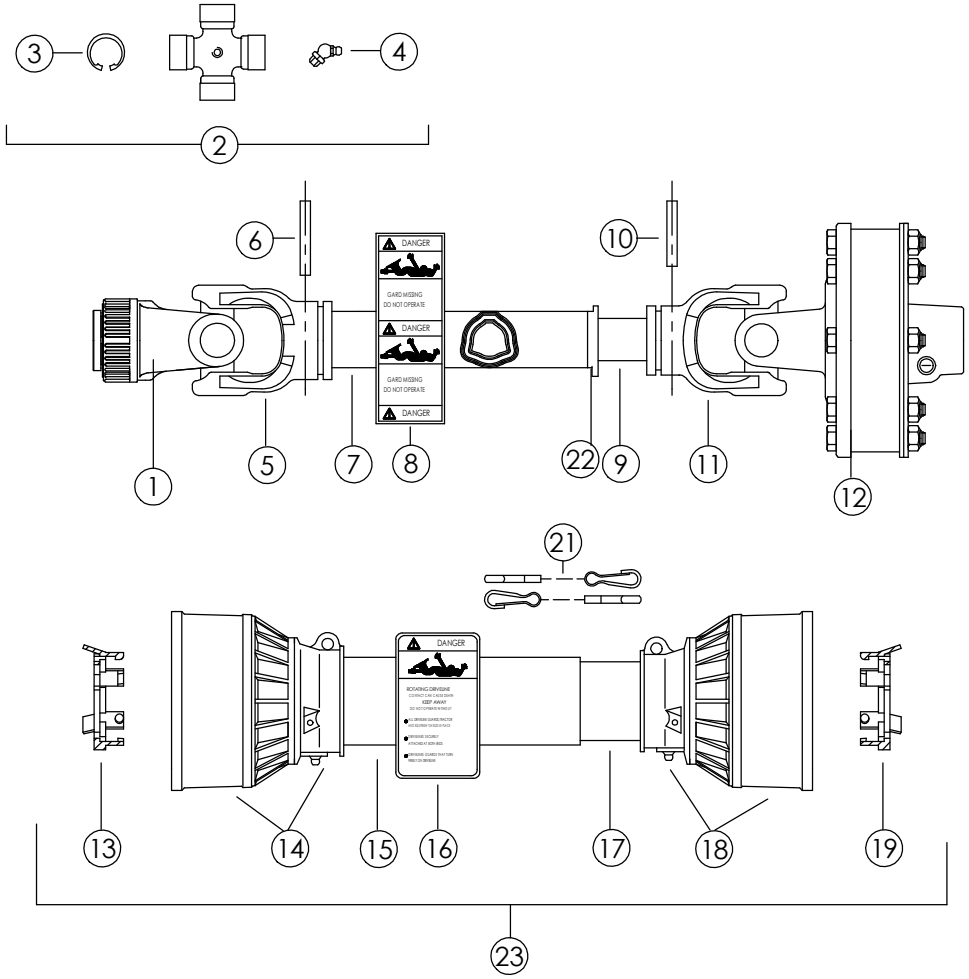
3
4
2
6
10
DANGER
GARD MISSING
DO NOT OPERATE
DANGER
GARD MISSING
DO NOT OPERATE
DANGER
1
5
7
8
22
9
11
12
21
DANGER
ROTATING DRIVELINE
CONTACT CAN CAUSE DEATH
KEEP AWAY
DO NOT OPERATE WITHOUT
SHIELDS IN PLACE
DRIVELINE SECURELY
ATTACHED AT BOTH ENDS
13
14
15
16
17
18
19
23

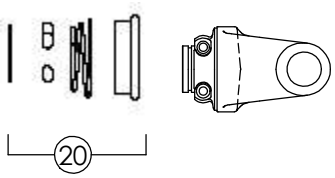
20

STANDARD PTO 1.375-21 #69679
1.75-20 #69680

ITEM	PART NO	DESCRIPTION	QTY
1	54198	YOKE-STD 1.375	1
	69866	YOKE-STD 1.75	
2	54235	CROSS KIT	2
3	55361	CIRCLIP	8
4	63440	GREASE NIPPLE	2
5	54242	YOKE-OUTER TUBE	1
6	55364	FLEXIBLE PIN	1
7	69867	TUBE OUTER	1
8	63293	DECAL-DRIVELINE	1
9	69868	TUBE INNER	1
10	55367	FLEXIBLE PIN	1
11	54234	YOKE INNER TUBE	1
12	305198	CLUTCH-TORQUE LIMITER	1
13	54238	BRG RING-OUTER SHIELD	1
14	54199	SHIELD CONE-OUTER	1
15	69869	OUTER SHIELD	1
16	63294	DECAL-DRIVELINE	1
17	69870	INNER SHIELD	1
18	55320	CONE SET-INNER SHIELD	1
19	54240	BRG RING-INNER SHIELD	1
20	69871	KIT-BALL COLLAR 1.375	1
	69872	KIT-BALL COLLAR 1.75	
21	69873	CHAIN-COMPLETE	2
22	69874	COLLAR-GREASE	1
23	69875	KIT-SHIELD COMPLETE W/CHAINS	1

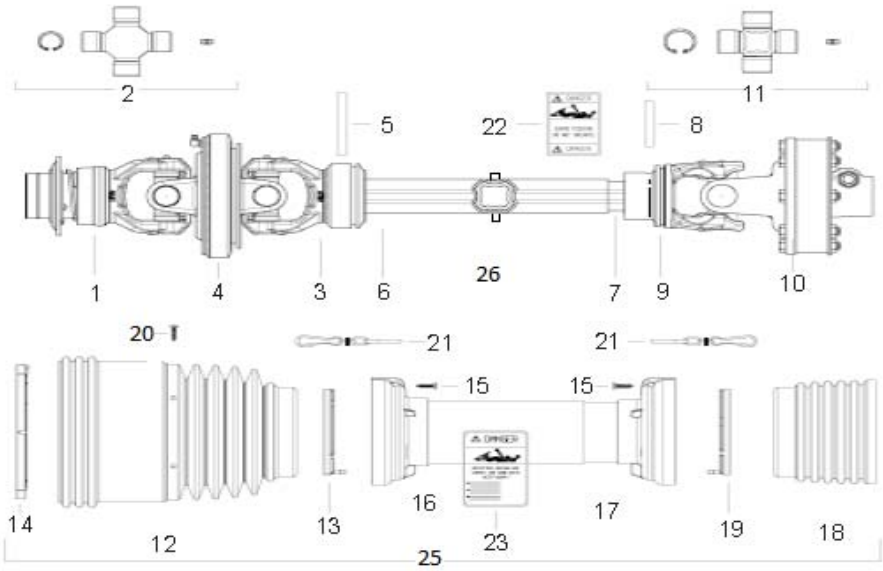
2
11
5
22
8
1
4
3
6
26
7
9
10
20
21
21
15
15
14
12
13
16
23
17
19
18
25

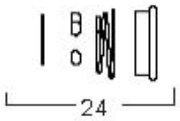
24

PTO CV 1-3/8-21 #69681
& 1-3/4-20 #69682

ITEM	PART NO.	DESCRIPTION	QTY
1	68758	YOKE-CV 1.375	1
	68734	YOKE-CV 1.750	
2	68735	CROSS-KIT	1
3	68736	YOKE-CV OUTER EXT TUBE	1
4	68737	CENTRAL BODY-CV JOINT	1
5	68738	PIN-ROLL	1
6	69684	TUBE-DRIVE OUTER (CV)	1
7	69685	TUBE-DRIVE INNER (CV)	1
8	68741	PIN-ROLL	1
9	68742	YOKE-CV INNER TUBE	1
10	305196	CLUTCH-TORQUE LIMITER (CV)	1
11	68744	CROSS-KIT	1
12	68745	CONE-SHIELD OUTER	1
13	68746	BEARING-SHIELD OUTER	1
14	68747	BEARING-SHIELD CONE	1
15	68748	SCREW-SELF TAPPING	6
16	68749	SHIELD-SAFETY TUBE OUTER	1
17	68750	SHIELD-SAFETY TUBE INNER	1
18	68751	CONE-SHIELD INNER	1
19	68752	BEARING-SHIELD INNER	1
20	69688	SCREW-SELF TAPPING FLANGE HEAD	6
21	69689	CHAIN-COMPLETE	2
22	63293	DECAL-DRIVELINE	1
23	63294	DECAL-DRIVELINE	1
24	69690	KIT-BALL COLLAR 1.375 (CV)	1
	68755	KIT-BALL COLLAR 1.750 (CV)	
25	68760	KIT-SHIELD COMPLETE W/CHAINS	1
26	69687	ZERK-GREASE: M6 X 1 SHORT	2

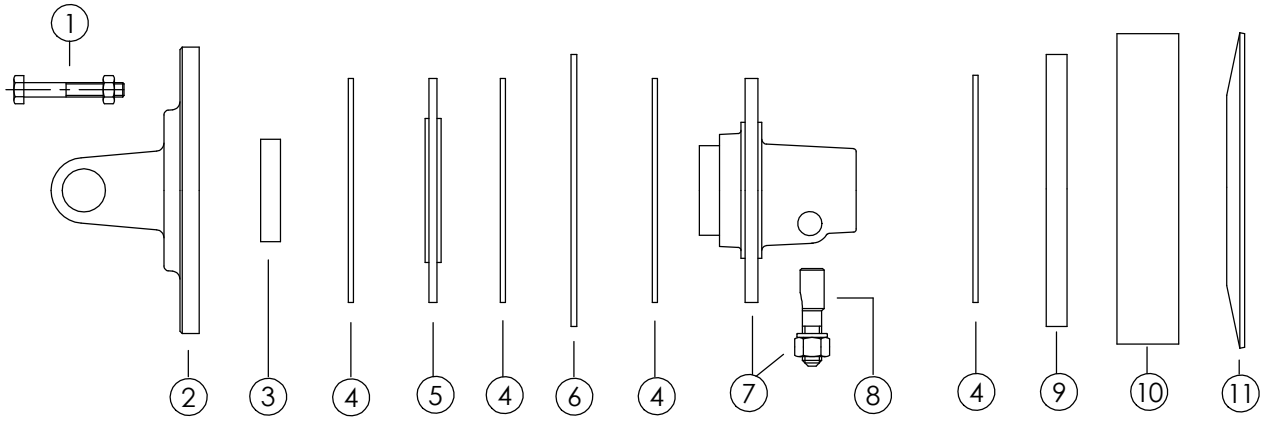
1
2
3
4
5
4
6
4
7
8
4
9
10
11

CLUTCH TORQUE LIMITER #305196(CV) & #305198(STD)			
ITEM	**PART NO.**	**DESCRIPTION**	**QTY**
1	63300	SCREW	8
2	69693	YOKE-FLANGE (CV)	1
	69864	YOKE-FLANGE (STD)	
3	63295	BUSHING	1
4	69692	LINING	4
5	69858	PLATE-LINING	1
6	69859	PLATE-INNER	1
7	69860	HUB	1
8	68782	KIT-TAPER PIN	1
9	69861	PLATE-THRUST	1
10	69862	SPACER	1
11	305197	SPRING	1

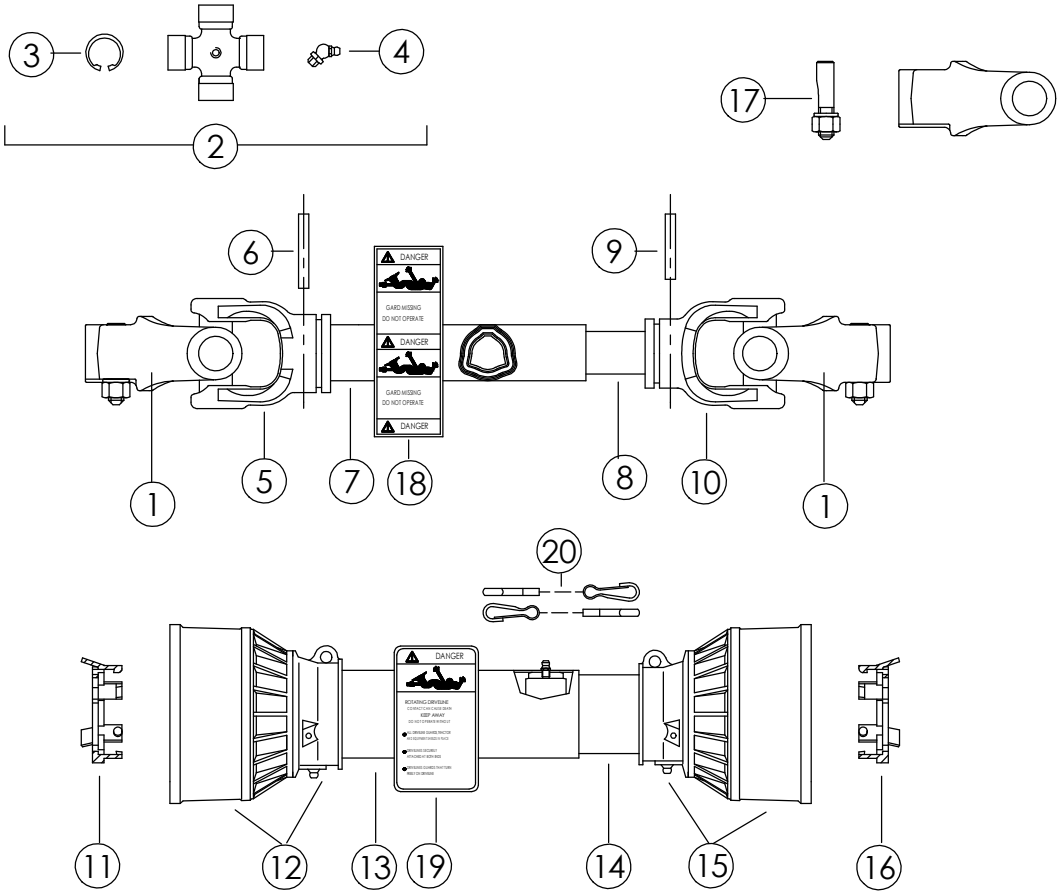
3
4
2
17
6
9
DANGER
GARD MISSING
DO NOT OPERATE
DANGER
GARD MISSING
DO NOT OPERATE
DANGER
1
5
7
18
8
10
1
20
DANGER
ROTATING DRIVELINE
CONTACT CAN CAUSE DEATH
KEEP AWAY
DO NOT OPERATE WITHOUT
ALL REMAIN GUARDS, TRACTOR
AND EQUIPMENT SHIELDS IN PLACE
REPAIRED SECURELY
OPERATING AT RATED RPM
REPAIR GUARDS THAT TURN
AND CAN BRUISE
11
12
13
19
14
15
16

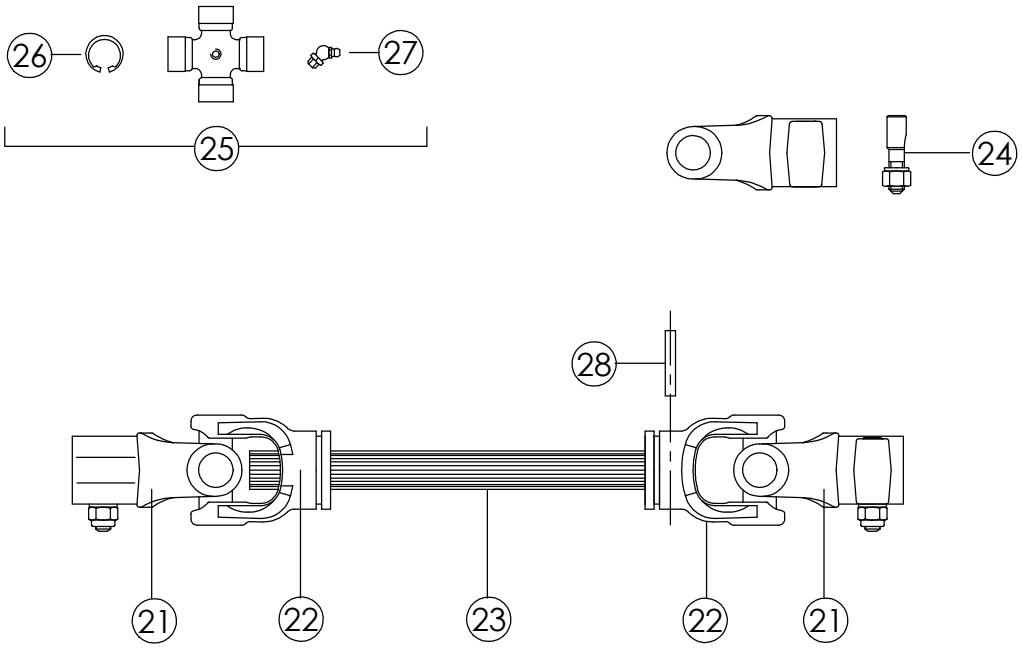
26
27
25
24
28
21
22
23
22
21

FRONT DRIVELINE #52399 & #68604				
ITEM	**PART NO.**	**DESCRIPTION**	**52399**	**68604**
1	68731	TRACTOR YOKE	2	2
2	54235	CROSS KIT	2	2
3	55361	SNAP RING	8	8
4	63440	GREASE ZERK	2	2
5	54242	OUTER TUBE YOKE	1	1
6	55364	ROLL PIN	1	1
7	63595	OUTER DRIVE TUBE	1	-
	63602	OUTER DRIVE TUBE	-	1
8	63596	INNER DRIVE TUBE	1	-
	63603	INNER DRIVE TUBE	-	1
9	55367	ROLL PIN	1	1
10	54234	INNER TUBE YOKE	1	1
11	54238	BEARING RING - OUTER SHIELD	1	1
12	55374	OUTER SHIELD CONE	1	1
13	63597	OUTER SHIELD TUBE	1	-
	63604	OUTER SHIELD TUBE	-	1
14	63598	INNER SHIELD TUBE	1	-
	63605	INNER SHIELD TUBE	-	1
15	55320	INNER SHIELD CONE	1	1
16	54240	BEARING RING - INNER SHIELD	1	1
17	63594	TAPER PIN KIT	2	2
18	63293	DECAL-DRIVELINE	1	1
19	63294	DECAL-DRIVELINE	1	1
20	69873	CHAIN-COMPLETE (STD)	2	2

SIDE DRIVELINE #52397				
ITEM	**PART NO.**	**DESCRIPTION**		**QTY**
21	68731	TRACTOR YOKE		2
22	54244	YOKE		2
23	63593	SHAFT-SPLINED		1
24	63594	TAPER PIN KIT		2
25	54235	CROSS KIT		2
26	55361	SNAP RING		8
27	63440	GREASE ZERK		2
28	63472	PIN-ROLL		1

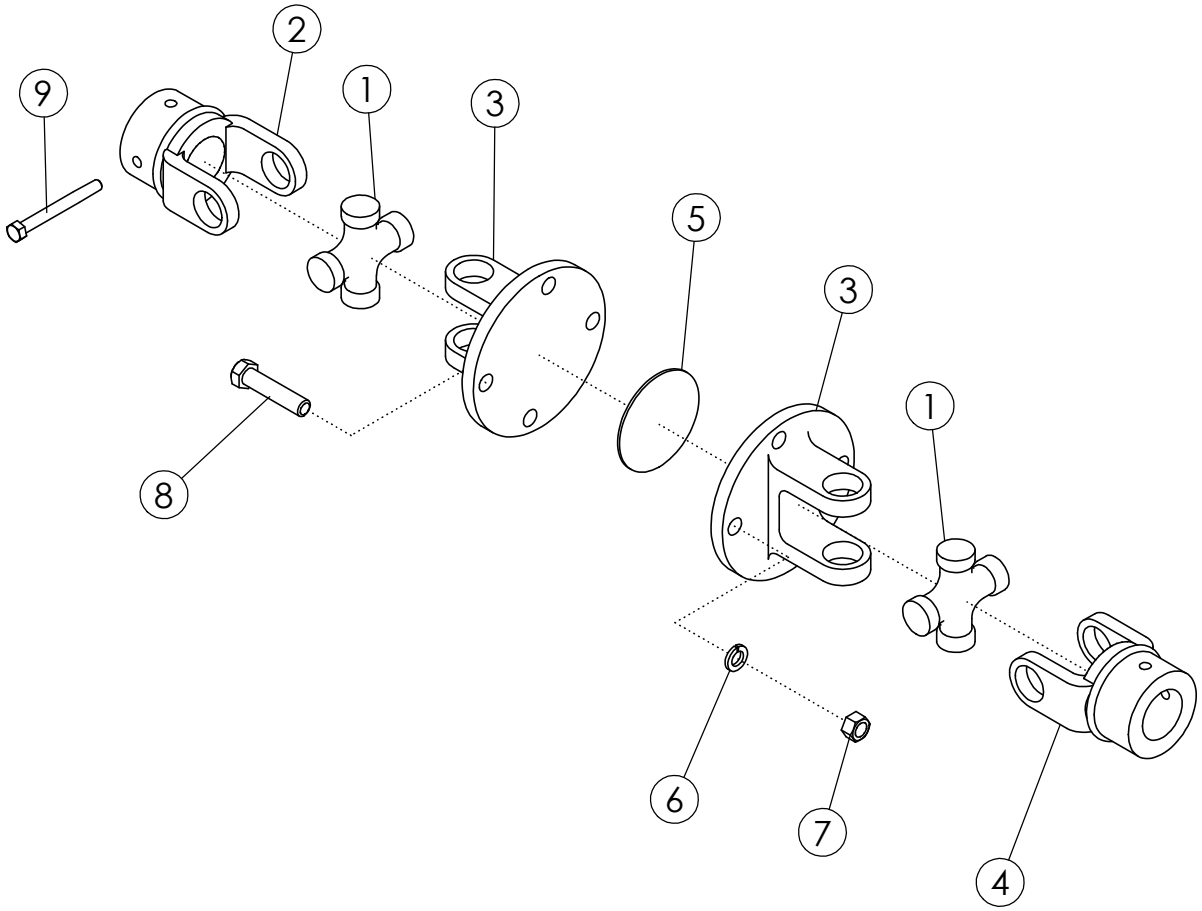
2
9
1
3
5
3
1
8
6
7
4

COUPLER-UNIVERSAL JOINT #68443			
ITEM	**PART NO.**	**DESCRIPTION**	**QTY**
1	54235	CROSS KIT	2
2	68731	YOKE-COUPLER TAPER PIN 1.750	1
3	68780	FLANGE-YOKE COUPLER	2
4	68732	YOKE COUPLER 1.750	1
5	68781	PLATE-LINER COUPLER	1
6	68591	WASHER-LOCK: M14	4
7	68444	NUT-HEX: M14	4
8	69019	BOLT-HEX: M14 X 2.0 X L50 CL8.8 ZP	4
9	68782	KIT-TAPER PIN 1.750	1

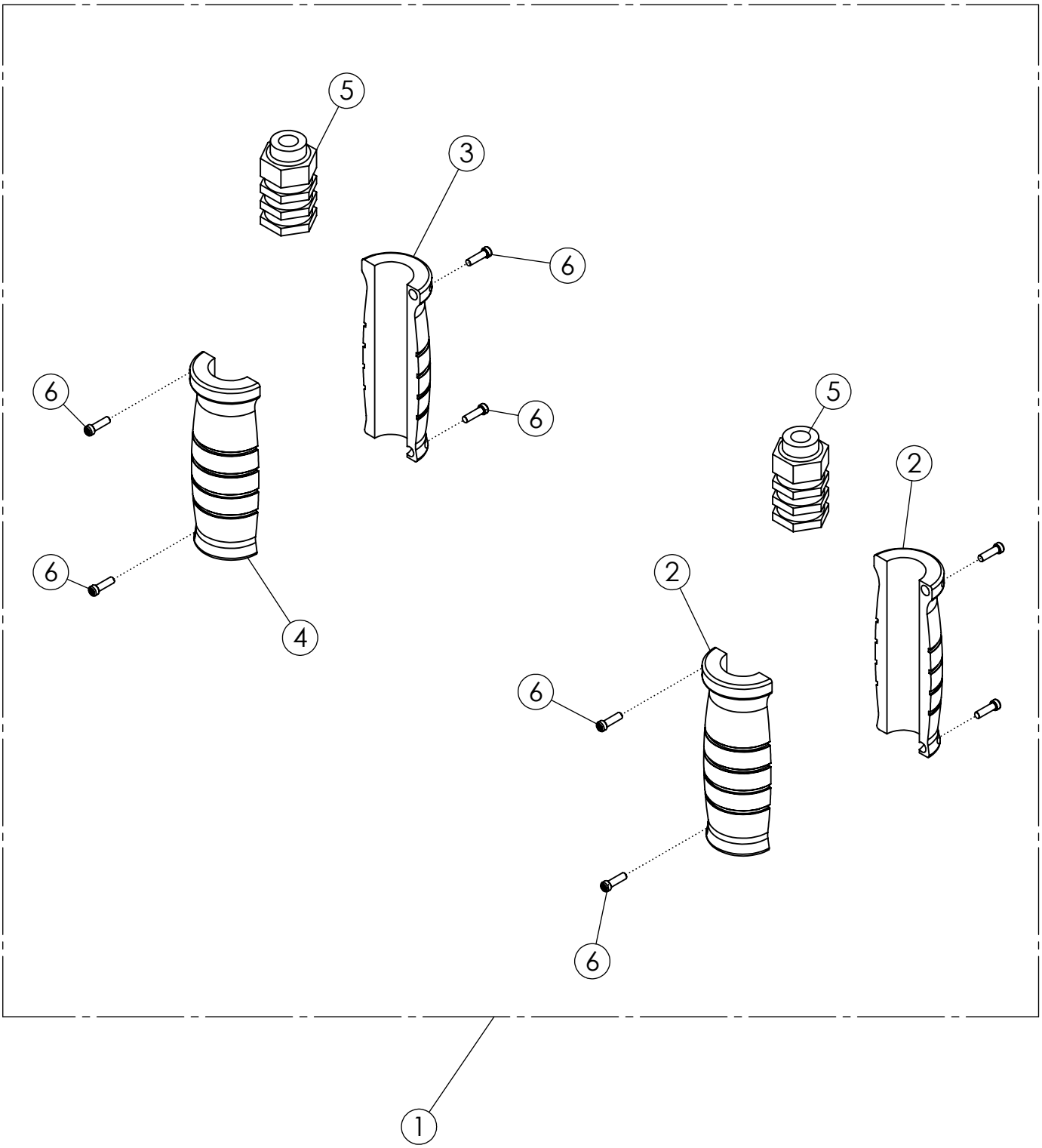
5
3
6
6
6
6
5
2
6
2
4
6
6
1

HYDRAULIC LABEL ASSY

ITEM	PART NO.	DESCRIPTION	QTY
1	301920*	HYD LABEL: .50 ORANGE/GRAY SET	1
	301902*	HYD LABEL: .50 BLUE/GRAY SET	
	301917*	HYD LABEL: .50 YELLOW/GRAY SET	
	301914*	HYD LABEL: .50 GREEN/GRAY SET	
	301911*	HYD LABEL: .50 BLACK/GRAY SET	
	301908*	HYD LABEL: .50 RED/GRAY SET	
	302230*	HYD LABEL: .50 RED/GREEN SET	
	302226*	HYD LABEL: .50 BLACK/ORANGE SET	
	302227*	HYD LABEL: .50 BLUE/YELLOW SET	
	301923*	HYD LABEL: .75 GREEN/GRAY SET	
	301928*	HYD LABEL: .75 YELLOW/GRAY SET	
2	301915	HYD LABEL: .50 GREEN HALF EXTEND	2
	301903	HYD LABEL: .50 BLUE HALF EXTEND	
	301909	HYD LABEL: .50 RED HALF EXTEND	
	301918	HYD LABEL: .50 YELLOW HALF EXTEND	
	301921	HYD LABEL: .50 ORANGE HALF EXTEND	
	301912	HYD LABEL: .50 BLACK HALF EXTEND	
	301921	HYD LABEL: .50 ORANGE HALF EXTEND	
	301925	HYD LABEL: .75 GREEN HALF EXTEND	
	301929	HYD LABEL: .75 YELLOW HALF EXTEND	
	302304	HYD LABEL: .75 RED HALF EXTEND	
3	301916	HYD LABEL: .50 GREEN HALF RETRACT	1
	301904	HYD LABEL: .50 BLUE HALF RETRACT	
	301910	HYD LABEL: .50 RED HALF RETRACT	
	301919	HYD LABEL: .50 YELLOW HALF RETRACT	
	301922	HYD LABEL: .50 ORANGE HALF RETRACT	
	301913	HYD LABEL: .50 BLACK HALF RETRACT	
	301922	HYD LABEL: .50 ORANGE HALF RETRACT	
	301926	HYD LABEL: .75 GREEN HALF RETRACT	
	301930	HYD LABEL: .75 YELLOW HALF RETRACT	
	302305	HYD LABEL: .75 RED HALF RETRACT	
4	301905	HYD LABEL: .50 GRAY HALF RETRACT	1
	301927	HYD LABEL: .75 GRAY HALF RETRACT	
5	301906	HYD LABEL: .50 CORE M & F O-RING	2
	301924	HYD LABEL: .75 CORE M & F O-RING	
6	301907	HYD LABEL: SET SCREW	8

* COMES WITH ITEMS 2 THRU 6

69055 SNAP RING PLIERS

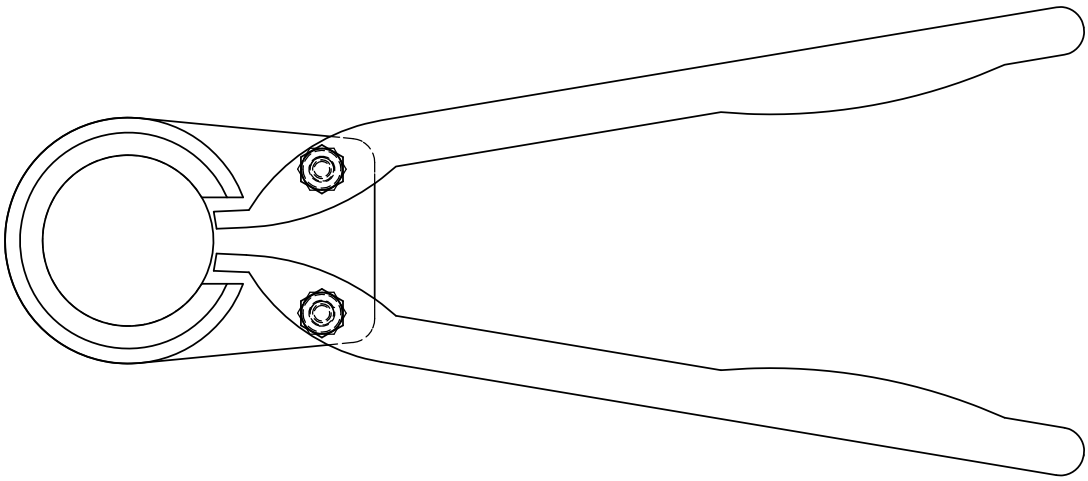

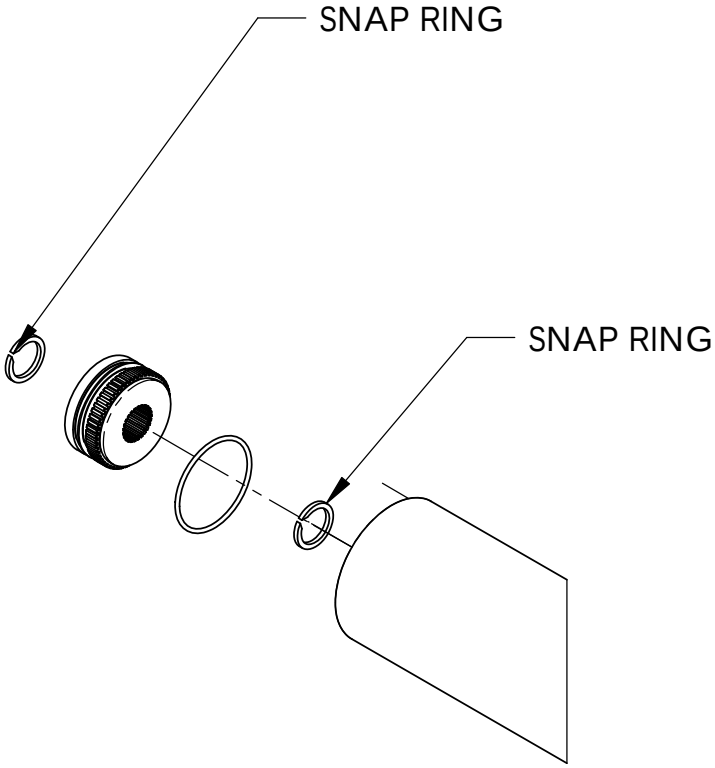

SHAFT REMOVED FOR CLARITY