OPERATING MANUAL

2026
HARVESTER
2200, 2300, 2400, 2500

2800 7th Avenue North
Fargo, ND 58108

Phone: (701) 232-4199
Fax: (701) 234-1716
Www.amitytech.com

MANUAL PART NO: MOHE59

RELEASE DATE: 04/2026
DESIGNED AND MANUFACTURED IN USA

This page is intentionally left blank.

AMITY TECHNOLOGY LLC LIMITED WARRANTY TERMS AND CONDITIONS – UNITED STATES

EFFECTIVE FOR EQUIPMENT RETAILED AND DELIVERED AFTER JUNE 1, 2020

WHAT IS WARRANTED Amity Technology warrants its new equipment to be free of defects in material and workmanship at time of delivery to the first retail purchaser, renter, or lessee. Amity Technology warrants any new or unused part which is manufactured by Amity Technology for use in an Amity Technology machine, jointly referred to as "Products", whether such Product is purchased through an authorized Amity Technology dealer or directly from Amity Technology. Under this Warranty, Amity Technology will repair or replace, as it chooses in its sole discretion, any covered Product, or any component thereof, which Amity determines to be defective. These terms apply to all Amity Technology brands of new equipment originally marketed in the United States.

WARRANTY PERIOD

- 12 Months from the date of delivery to the first retail purchaser, renter or lessee.

EXCEPTIONS FROM THIS WARRANTY

- **Freight Charges -** This warranty does not cover freight charges.
- **Improvements, Changes, or Discontinuance** Amity Technology reserves the right to make changes and improvements in design or changes in specifications at any time to any product without incurring any obligations to owners of products previously sold.
- **Repairs and Maintenance Not Covered Under Warranty -** This warranty does not cover conditions resulting from misuse, natural calamities, use of non-Amity Technology parts, negligence, alteration, accident, use of unapproved attachments, usage which is contrary to the intended purposes, or conditions caused by failure to perform required maintenance. Replacement of Wear or Maintenance items (unless defective) such as but not limited to, filters, hoses, belts, lubricants, light bulbs, wheel alignment, tightening of nuts, belts, bolts, and fittings, service tune-up, computer parameter adjustments and general adjustments which may from time to time be required are not covered.
- **Rubber Tire Warranty -** Rubber tires are warranted directly by the respective manufacturer only and not by Amity Technology.

OWNER'S OBLIGATION

It is the responsibility of the Owner to transport the equipment or parts to the service shop of an authorized Amity Technology Dealer or alternatively to reimburse the Dealer for any travel or transportation expense involved in fulfilling this warranty. This Warranty does NOT cover rental of replacement equipment during the repair period, damage to products which have been declared a total loss and subsequently salvaged, overtime labor charges, freight charges for replacement parts, or special handling requirements (such as, but not limited to, the use of cranes).

EXCLUSIVE EFFECT OF WARRANTY AND LIMITATION OF LIABILITY

THIS WARRANTY IS IN LIEU OF ALL WARRANTIES OF MERCHANTABILITY, FITNESS FOR A PURPOSE OR OTHER REPRESENTATIONS, WARRANTIES OR CONDITIONS, EXPRESSED OR IMPLIED. The remedies of the Owner set forth herein are exclusive. The Company neither assumes nor authorizes any person to assume for it any other obligation or liability in connection with the sale of covered machines. Correction of defects, in the manner and for applicable period of time provided above, shall constitute fulfillment of all responsibilities of Amity Technology to the Owner, and Amity Technology shall not be liable for negligence under contract or in any manner with respect to such machines. IN NO EVENT SHALL THE OWNER BE ENTITLED TO RECOVER FOR INCIDENTAL, SPECIAL OR CONSEQUENTIAL DAMAGES SUCH AS BUT NOT LIMITED TO, LOSS OF CROPS, LOSS OF PROFITS OR REVENUE, OTHER COMMERCIAL LOSSES, INCONVENIENCE OR COST OF RENTAL OR REPLACEMENT EQUIPMENT.

Some States or Provinces do not permit limitations or exclusions of implied warranties or incidental or consequential damages, so the limitations or exclusions in this warranty may not apply.

Additional Warranty Information

New Equipment Warranty - Equipment is eligible for warranty service only if it qualifies under the provisions of the New Equipment Warranty. The selling dealer will deliver this Warranty to the original retail purchaser at the time of sale, and the dealer will register the sale and Warranty with Amity Technology LLC.

Subsequent Owners - This Warranty covers the first retail purchaser and all subsequent owners of the equipment during the specified warranty period. Should the Amity Technology Dealer sell this equipment to a subsequent owner, the Dealer must deliver the warranty document to the subsequent owner so the subsequent owner can register ownership with Amity Technology and obtain the remaining warranty benefits, if available, with no intermission in the Warranty Period. Subsequent Owner Procedure will apply. It is the responsibility of the subsequent owner to transport the equipment to the service shop of an authorized Amity Technology Dealer or alternatively to reimburse the Dealer for any travel or transportation expense involved in fulfilling this warranty. This Warranty does NOT cover charges for rental or replacement equipment during the repair period, products which have been declared a total loss and subsequently salvaged, overtime labor charges, freight charges for replacement parts, or units sold at auction.

Warranty Service - To be covered by Warranty, service must be performed by an authorized Amity Technology Dealer. It is recommended that you obtain warranty service from the Dealer who sold you the equipment because of that Dealer's continued interest in you as a valued customer. In the event this is not possible, warranty service may be performed by any other authorized Amity Technology Dealers in the United States or Canada. It is the responsibility of the Owner to transport the equipment to the service shop of an authorized Amity Technology Dealer or alternatively to reimburse the Dealer for any travel or transportation expense involved in fulfilling this warranty.

Maintenance Service - The Owner's Manual furnished to you with the equipment at the time of delivery contains important maintenance and service information. You must read the manual carefully and follow all the maintenance and service recommendations. Doing so will result in greater satisfaction with your equipment and help avoid service and warranty problems. Please remember that failures due to improper maintenance of your equipment are not covered by warranty.

Maintenance Inspections - To insure the continued best performance from your agricultural equipment, we recommend that you arrange to make your equipment available to your selling Dealer for a maintenance inspection 30 days prior to warranty expiration.

This page is intentionally left blank.

TABLE OF CONTENTS

WARRANTY..... ii
TABLE OF CONTENTS.....iv-v

1.0 INTRODUCTION.....1-1
1.1 General Information.....1-1
1.2 Serial Number.....1-1

2.0 SAFETY.....2-1
2.1 Recognizing Safety Information in Manual.....2-1
2.2 General Safety.....2-1
2.3 Maintenance and Operating Safety.....2-2
2.4 Hydraulic Safety.....2-3
2.5 Transport Safety.....2-3
2.6 Safety Decals.....2-4

3.0 SPECIFICATIONS.....3-1
3.1 Harvester Specifications.....3-1
3.2 Tractor Specifications.....3-1
3.3 Traction.....3-2
3.4 Hydraulic Flow Rates.....3-2

4.0 PREPARATION.....4-1
4.1 Tractor Preparation.....4-1
4.1.1 Adjusting the Drawbar.....4-1
4.1.2 Tire Spacing and Inflation.....4-1
4.1.3 Three-Point Hitch Position.....4-1
4.2 Harvester Preparation.....4-2
4.2.1 Lifter Strut Spacing.....4-2
4.2.2 Hydraulic Tank Oil Level and Valve Position.....4-2
4.2.3 Shield Placement.....4-2
4.2.4 Gearbox Oil Levels.....4-2
4.2.5 Greasing.....4-3
4.2.6 Attaching PTO to Harvester.....4-3
4.2.7 Raising Boom.....4-3

5.0 ATTACHING AND DETACHING.....5-1
5.1 Attaching Hydraulic and Electrical Systems.....5-1
5.2 Attaching Harvester to Tractor Drawbar.....5-1
5.3 Attaching PTO Driveline.....5-2
5.4 Using Stands.....5-2

6.0 OPERATING THE HARVESTER.....6-1
6.1 Start Up.....6-1
6.2 Field Operating Speed.....6-1
6.3 Turning Radius.....6-1
6.4 Break-In Period.....6-1
6.5 Field Cleaning.....6-2
6.6 Lifter Struts.....6-2
6.7 Leveling Adjustment.....6-2
6.7.1 Manual.....6-2
6.7.2 Automatic Depth Control.....6-2
6.8 Row Finder.....6-3
6.9 Digging Depth.....6-3
6.9.1 Pinch Point Spacing and Position.....6-3
6.10 Wheel Fillers.....6-3
6.11 Scrapers.....6-4
6.12 Paddles.....6-4
6.13 Apron Chain.....6-4
6.14 Grabroll Bed.....6-5
6.15 Scrub Chain.....6-5
6.16 Elevator Chain.....6-6
6.17 Machine Shutdown.....6-6

7.0 ADJUSTMENTS.....7-1
7.1 Row Finder.....7-1
7.2 Front Hitch.....7-2
7.3 Manual Rear Leveling (Non-ADC).....7-2
7.4 Pinch Point Position.....7-3
7.5 Pinch Point Width.....7-4
7.6 Wheel Fillers.....7-5
7.6.1 Adding Center Mount Wheel Fillers.....7-5
7.6.2 Adding Rim Mount Filler Tabs.....7-5
7.7 Scrapers.....7-6
7.7.1 Top Scraper.....7-6
7.7.2 Bottom Scraper.....7-6
7.7.3 Back Scraper.....7-6
7.8 Paddle Shaft Position.....7-6
7.9 Paddles.....7-7
7.10 Apron Chain.....7-8
7.10.1 Apron Chain Tension.....7-8
7.10.2 Replacing Apron Chain.....7-9
7.10.3 Squaring Shafts.....7-9

TABLE OF CONTENTS

7.11 Drive Belt.....7-10
7.11.1 Belt Tension.....7-10
7.11.2 Replacing Belt.....7-10
7.12 Grabroll Spacing.....7-11
7.13 Grabroll Height.....7-11
7.14 Grabroll Speed.....7-12
7.15 Rock Trip Spring.....7-13
7.16 Grabroll Bed Angle.....7-14
7.17 Reverse Grabroll.....7-15
7.17.1 Installing Reverse Grabroll Kit 7-15
7.17.2 Installing Reverse Grabroll Kit (2500).....7-16
7.18 Roller Chain Tension and Replacement.....7-17
7.18.1 Paddle Shaft Chain.....7-17
7.18.2 Jump Chain.....7-18
7.18.3 Grabroll Bed Chain.....7-18
7.19 Slip Clutches.....7-19
7.20 Rear Scrub.....7-20
7.20.1 Scrub Speed.....7-20
7.20.2 Scrub Tension.....7-21
7.21 Head Shaft Sprocket Dimensions.....7-21
7.22 Elevator.....7-22
7.22.1 Elevator Chain Speed.....7-22
7.22.2 Elevator Height.....7-22
7.23 Rear Strut Steering.....7-23
7.23.1 Dual 11.2 x 24 Tires.....7-23
7.23.2 Single 710/40r22.5 Tires.....7-23
7.23.3 Self Centering Steering.....7-24
7.24 ADC Wand Adjustments.....7-26

8.0 TRANSPORTATION.....8-1
8.1 Warning Lights.....8-1
8.2 Preparing for Transport.....8-1

9.0 CLEANING.....9-1
9.1 Row Finder.....9-1
9.2 Lifter Struts and Paddles.....9-1
9.3 Grabrolls.....9-1
9.4 Apron Shafts.....9-2
9.5 Rear Scrub.....9-2
9.6 Beet Tank.....9-2

10.0 STORAGE.....10-1
10.1 End of Season.....10-1
10.2 Beginning of Season.....10-1

11.0 LUBRICATION AND MAINTENANCE.....11-1
11.1 General Maintenance Information.....11-1
11.1.1 Grease Type.....11-1
11.2 U Joints.....11-1
11.3 Hydraulic Oil Tank Level.....11-1
11.4 Drive Belt.....11-2
11.5 Lifter Strut Hubs.....11-2
11.5.1 Torquing Spindle Nut 11-2
11.6 Gearbox Oil Level 11-3
11.7 Breather Cleaning.....11-3
11.8 Slip Clutch Maintenance.....11-4
11.9 Hook Rod Chains.....11-4
11.10 Servicing Intervals.....11-5
11.11 Lubrication Chart.....11-6
11.12 PTO Driveline Servicing.....11-9

12.0 TROUBLESHOOTING.....12-1

13.0 Active Depth Control (ADC).....13-1
13.1 ISOBUS ADC Operation Introduction.....13-1
13.1.1 Terminology.....13-2
13.2 Safety.....13-3
13.3 Softkey Definitions.....13-4
13.4 Main Page.....13-5
13.5 Diagnostics Page.....13-11
13.6 Settings Page.....13-13
13.7 Rear Cylinder Calibration.....13-17
13.8 Active Alarm Page.....13-18
13.9 Using ADC.....13-20
13.10 Alarm Information.....13-22

14.0 APPENDICES.....14-1
14.1 Conversions 14-1
14.2 Trantorque Installation Procedures.....14-1
14.3 Belted Chain Splice Procedure.....14-2
14.4 Tools.....14-3
14.5 Tapered Hub/Sprocket Installation.....14-3
14.6 Torque Wrench Effective Length.....14-4
14.7 Easy Lock Assembly and Removal.....14-5
14.8 Torque Chart.....14-6

1.0 INTRODUCTION

1.1 General Information

Read this manual carefully to learn how to operate and service your machine correctly. Failure to read this manual can result in personal injury or equipment damage.

This manual is a permanent part of your machine and should remain with the machine when you sell it.

Measurements in this manual are given in both customary U.S. units and metric equivalents. Use only correct replacement parts and fasteners. Metric and inch fasteners require appropriate tools to install.

NOTE: Right- and left-hand sides are determined by facing in the direction the implement will travel when moving forward.

1.2 Serial Number

Record the serial number, model number, and model year of your harvester to help trace the machine in the event that it is stolen. Your dealer also needs these numbers for all warranty claims and for when you order parts.

The harvester serial number is found on the serial number plate, which is located on the front of the machine as shown in Figure 1-1.

Record your serial number, model number, and model year in the space provided below.

Serial Number:

_____

Model Number:

_____

Model Year:

_____

Figure 1-1: Serial Number Plate Location

2.0 SAFETY

2.1 Recognizing Safety Information in Manual

Figure 2-1 is the safety-alert symbol. When you see this symbol on your machine or in this manual, be alert to the potential for personal injury.

Follow recommended precautions and safe operating practices.

Figure 2-1: Safety-Alert Symbol

2.2 General Safety

You are responsible for the safe operation and maintenance of your Amity implement. You and anyone else who will operate, maintain, or work around the machine should be familiar with the operating and maintenance procedures and safety information in this manual.

Safety practices protect you and the people around you, so make them a working part of your safety program.

Equipment owners must give operating instructions annually to operators or employees before allowing them to operate the machine, per OSHA regulation 1928.57.

The most important element of safety for this equipment is a safe operator. It is the operator's responsibility to read and follow all safety and operating instructions in the manual. All accidents can be avoided.

A person who has not read and understood all operating and safety instructions is not qualified to operate the machine. An untrained operator exposes himself and bystanders to serious injury or death.

Do not modify the equipment in any way. Unauthorized modification may impair the function or safety, or both, and could alter the life and warranty of the product.

The following list is a set of safety guidelines to adhere to:

1. Read and understand the Operator's Manual and all safety signs before operating, maintaining, or adjusting the machine.

2. Install and properly secure all shields and guards before operating.

3. Have a first-aid kit available and know how to use it.

4. Have a fire extinguisher available and know how to use it.

5. Clear the area of people and remove foreign objects from the machine before starting and operating.

6. Shift to park, disengage PTO, lower machine to ground, relieve hydraulic pressure, stop engine, remove ignition key, and wait for all moving parts to stop before servicing, adjusting, repairing, or disconnecting.

7. Annually review safety guidelines with all operators.
8. Wear suitable ear protection for prolonged exposure to excessive noise.

Think SAFETY! Work SAFELY!

2.3 Maintenance and Operating Safety

1. Read and understand all information contained in the Operator's Manual regarding maintenance, adjustment, and operation of the machine.
2. Shift to park, disengage PTO, lower machine to ground, relieve hydraulic pressure, stop engine, remove ignition key, and wait for all moving parts to stop before servicing, adjusting, repairing, or disconnecting the machine.
3. Keep hands, feet, clothing, and hair away from all moving and/or rotating parts.
4. Ensure that all tractor controls are in neutral before starting.
5. Never wear ill-fitting, baggy, or frayed clothing when working on or around the machine.
6. Make sure that all guards and shields are properly installed and secured before operating the machine.
7. Clear the area of all bystanders, especially children, when carrying out any maintenance or making adjustments on the systems or components.
8. Place stands or blocks under the frame before working beneath the machine.
9. Do not allow riders on the implement or tractor during field operation or transport.
10. Never operate the machine inside a closed building.
11. Stay away from overhead obstructions and power lines during setup and operation. Electrocution can occur without direct contact.

2.4 Hydraulic Safety

1. Always place all tractor hydraulic controls in neutral before dismounting.

2. Make sure that all components in the hydraulic system are kept in good condition and are clean and tight.

3. Replace any worn, cut, abraded, flattened or crimped hoses and metal lines.

4. Do not attempt any makeshift repairs to the hydraulic lines, fittings, or hoses by using tape, clamps, or cements. The hydraulic system operates under extremely high pressure. Such repairs may fail suddenly, creating a hazardous and unsafe condition.

5. Wear proper hand and eye protection when searching for a high-pressure hydraulic leak. Use a piece of wood or cardboard as a backstop instead of hands to isolate and identify a leak.

6. If injured by a concentrated high pressure stream of hydraulic fluid, seek medical attention immediately. Serious infection or toxic reaction can develop from hydraulic fluid piercing the skin's surface.

7. Before applying pressure to the system, make sure all components are tight and that lines, hoses, and couplings are not damaged.

8. On self-contained hydraulic systems, make sure that shut off valves are in open position before engaging PTO.

2.5 Transport Safety

1. Read and understand all information in the Operator's Manual regarding procedures and safety when operating the machine in the field or on the road.

2. Make sure the Slow Moving Vehicle (SMV) emblem and required lights and reflectors are in place, clean, and can be seen clearly by all overtaking and oncoming traffic.

3. Do not allow riders on any part of the machine during either field operation or travel.

4. Attach the machine to the tractor using only a drawbar pin with provisions for a mechanical retainer.

5. Always attach a safety chain.

6. Always use hazard warning flashers when transporting unless prohibited by law.

7. Always move all parts of the machine to transport position when travelling on a road.

8. Stay away from overhead obstructions, such as power lines.

9. For max transport speed on smooth roads, see section 3.3.

2.6 Safety Decals

The types of decals on the equipment are shown in the illustration below. Proper safety requires that you familiarize yourself with the various safety decals, the type of warning, and the area, or particular function related to that area, that requires your safety awareness.

REMEMBER: If safety decals have been damaged or removed, become illegible, or parts are replaced without decals, then new decals must be applied. New decals are available from your authorized dealer.

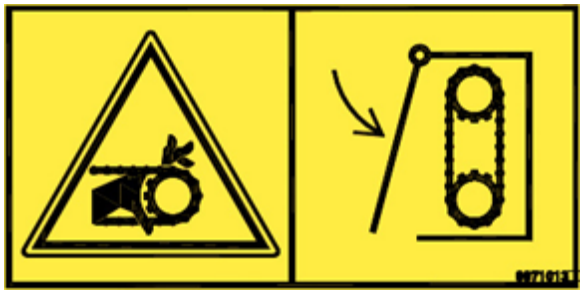

PN: 9971013

Hazard: Moving Parts

Avoidance: Keep shields and doors in place at all times when operating the machine.

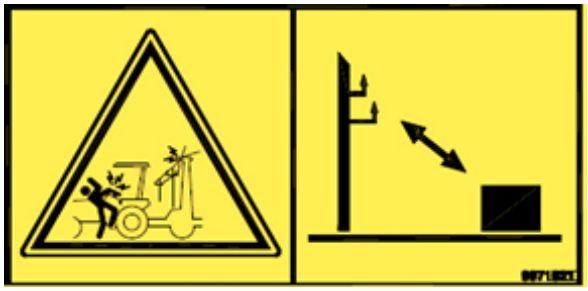

PN: 9971021

Hazard: Electrical Shock

Avoidance: Stay clear of overhead power lines and other obstructions.

PN: 303265

Hazard: Crushing from Above

Avoidance: Never crawl or work under machine unless it is properly supported.

PN: 9971011

Hazard: Moving Parts

Avoidance: Keep hands, feet, hair, and clothing away from moving parts.

PN: 9971015

Hazard: Falling off Machine

Avoidance: Do not climb on the machine.

PN: 997859

Hazard: General Safety Alert

Avoidance: Shut off engine and remove key before performing maintenance or repair work.

PN: 303277

Hazard: Falling off Machine

Avoidance: Do not climb on the machine.

PN: 997861

Hazard: General Safety Alert

Avoidance: Read and understand the Operator's Manual before operating the machine.

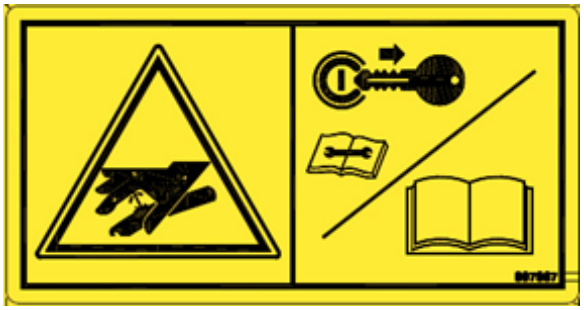

PN: 997867

Hazard: High Pressure Fluid

Avoidance: Relieve pressure on system before repairing, adjusting, or disconnecting. Wear proper hand and eye protection when searching for leaks. Use wood or cardboard instead of hands. Keep all components in good repair.

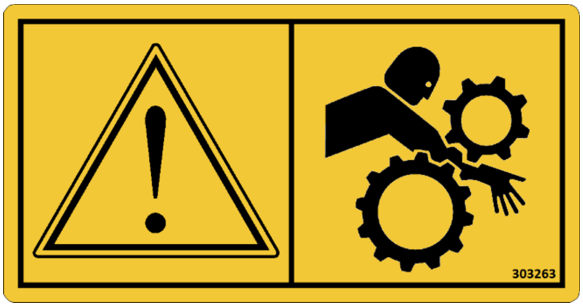

PN: 303263

Hazard: Getting Limbs or Clothing Stuck in Machine

Avoidance: Keep hands, feet, hair, and clothing away from moving parts.

PN: 997863

Hazard: Electrical Shock

Avoidance: Keep the machine clear of overhead electrical power lines.

PN: 303268

Hazard: Rotating Part

Avoidance: Keep clothing, yourself, and others clear.

PN: 9971025

Hazard: Crushing from Above

Avoidance: Stay clear of this area while engine and machine are operating.

PN: 311206

Hazard: Whole Body Entanglement

Avoidance: Do not remove safety shield while engine is running.

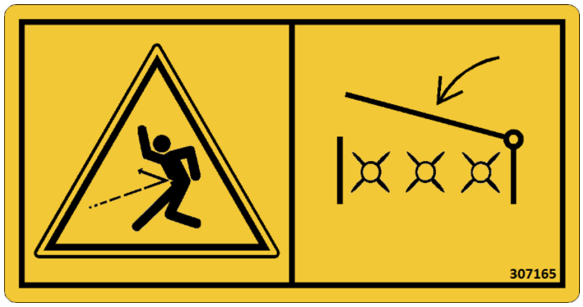

PN: 307165

Hazard: Flying Debris

Avoidance: Keep top door closed when flails are rotating.

PN: 303267

Hazard: Rotating Flails

Avoidance: Do not approach machine until flail rotation has stopped.

PN: 311207

Hazard: Pinch Point

Avoidance: Keep hands clear of any moving parts around the pinch point.

PN: 997841

Hazard: Crushing from Moving Parts

Avoidance: Stay clear of this area while engine and machine are operating.

PN: 997853

Hazard: Negative Tongue Weight

Avoidance: Stay clear of the tongue when disconnecting the implement from the tractor. Read the Operator's Manual or safety information and operating instructions before operating the

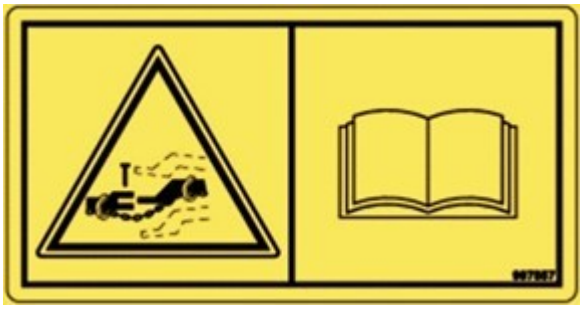

PN: 997857

Hazard: Loss of Machine Control

Avoidance: Install the safety chains when attaching the implement to the tractor. Read the Operator's Manual for safety information and operating instructions before

3.0 SPECIFICATIONS

3.1 Harvester Specifications

Table 3-1: Harvester Specifications

	2200	2300	2400	2500
Weight (Approx.)	19,000 lbs [8,618 kg]	20,000 lbs [9,072 kg]	21,500 lbs [9,752 kg]	22,500 lbs [10,206 kg]
Tank Capacity	2 ton [1814 kg]	2 ton [1814 kg]	2.5 ton [2268kg]	2.5 ton [2268 kg]
Recommended Working Speed	3-5 mph [4.8-8.1 kmh]			
Transport Width (with boom down)	11’ 5” [3.48 m]	16’ 4” [5.00 m]	17’ 4”[5.28 m]	19’ 8” [6.00 m]
Operating Width (with boom up)	12’ 3” [6.17]	20’ 2” [6.16 m]	21’ 2” [6.45 m]	23’ 10” [7.26 m]
Length	20’ 6” [6.25 m]	20’ 6” [6.25 m]	20’ 6” [6.25 m]	20’ 6” [6.25 m]
Transport Height (with boom down)	13’ 10” [4.22 m]	13’ 10” [4.22 m]	13’ 10” [4.22 m]	13’ 10” [4.22 m]
Operating Height (with boom up)	15’ 0” [4.57 m]	15’ 0” [4.57 m]	15’ 0” [4.57 m]	15’ 0” [4.57 m]

3.2 Tractor Specifications

Table 3-2: Tractor Specifications

	2200	2300	2400	2500
Minimum Horsepower	170 hp [127 kw]	170 hp [127 kw]	200 hp [149 kw]	200 hp [149 kw]
Minimum Recommended Horsepower	200 hp [149 kw]	200 hp [149 kw]	230 hp [172 kw]	230 hp [172 kw]
Minimum Weight	12,700 lbs [5760 kg]	13,400 lbs [6078 kg]	14,400 lbs [6532 kg]	15,000 lbs [6804 kg]
Vertical Drawbar Load Est.	7,200 lbs [3266 kg]	7,600 lbs [3447 kg]	8,200 lbs [3719 kg]	8,500 lbs [3856 kg]
PTO Output	1000 RPM	1000 RPM	1000 RPM	1000 RPM
Spline Size	1¾ in. (20 spline) 1⅜ in. (21 spline)			
Hydraulic Capacity (Minimum Features)	30 GPM [114 L/m]			
Hydraulic Capacity (Recommended)	45 GPM [170 L/m]			
Hydraulic Pressure	2700 PSI [18.6 Mpa]			
Number of Remotes	4 or 3 + Power Beyond			

NOTE: Make sure to use hydraulic motor case drain where it applies.

NOTE: When operating with power beyond, use a load sense line to reduce the risk of damaging components.

3.3 Traction

Front wheel assist (or four wheel drive) is recommended when pulling a harvester. In addition, front and/or rear weights may be necessary for balance, traction, and steering.

Table 3-3: Tire Size, Pressure, and Lug Nut Torque

Tire Size	Tire Pressure	Lug Nut Torque	Max Transport Speed
11.2-24	42 PSI [2.9 bar]	400-450 ft-lb [542.4-610.2 N·m]	25 mph [40 kph]
23.5/55-26	30 PSI [2.1 bar]	400-450 ft-lb [542.4-610.2 N·m]	25 mph [40 kph]
710/70R38	46 PSI [3.2 bar]	400-450 ft-lb [542.4-610.2 N·m]	25 mph [40 kph]

3.4 Hydraulic Flow Rates

Each hydraulic circuit for the harvester has a designated flow rate; approximate values are listed in the table below.

Table 3-4: Hydraulic Flow Rates

Circuit	Standard	Metric
Beet Tank Elevator	15 GPM	57 L/m
Row Finder (Closed Center)	5 GPM	19 L/m
Hitch Lift	10 GPM	38 L/m
Rear Lift (non-ADC)	10 GPM	38 L/m
Optional—Active Depth Control (Closed Center)	20 GPM	76 L/m
Optional—Scrub Drive	20 GPM	76 L/m

NOTE: Values listed are a good starting point; however, flow rates should be fine-tuned to allow the smallest flow rate possible while still providing enough power to run harvester properly.

4.0 PREPARATION

4.1 Tractor Preparation

4.1.1 Adjusting the Drawbar: It is recommended that the tractor drawbar be set to the shortest position and be within the given range (in accordance with ANSI/ASABE AD6489-3) to maintain the integrity of the drive system. Dimensions are shown in Figure 4-1.

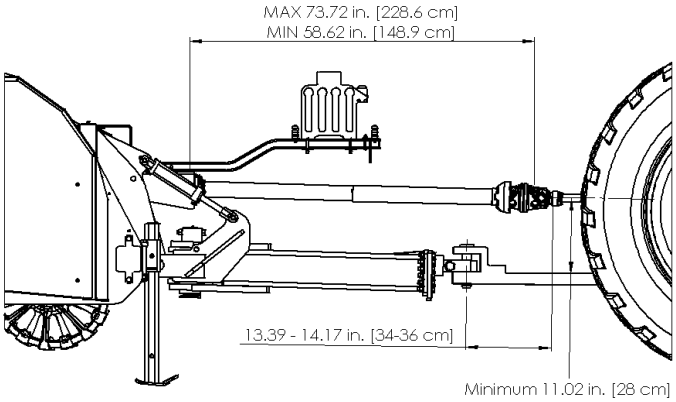

Figure 4-1: Drawbar Range

IMPORTANT: Ensure the driveline remains within operating range under all conditions.

4.1.2 Tire Spacing and Inflation: Tires should be inflated to the manufacturer's specification. See Section 3.3, Traction, for more information. Figure 4-2 shows the appropriate tire spacing.

A = 4 * B

B = Row Spacing

C = Tire Width; must be as narrow as possible.

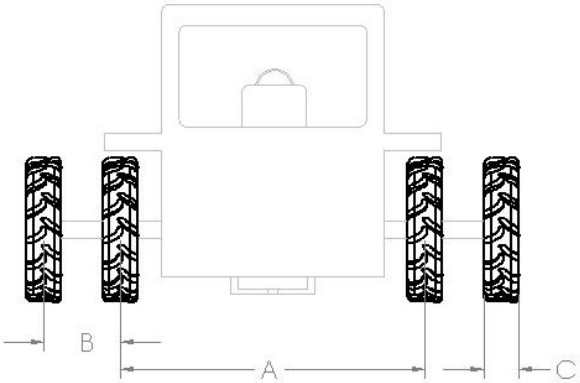

Figure 4-2: Tire Spacing

IMPORTANT: Tires must be narrow enough not to contact beets when driving down rows while still providing enough traction to pull the harvester.

NOTE: The Front tires must be aligned with the rear tires.

4.1.3 Three-Point Hitch Position: Three-point hitches cannot be connected to the hitch when using an Amity beet harvester. It must be fully raised or removed.

Figure 4-3: Fully Raised Three-Point Hitch

NOTE: Amity recommends removing three-point hitches.

⚠ **CAUTION:** Ensure the receiver and drawbar support arms clear the PTO driveline under all conditions.

4.2 Harvester Preparation

4.2.1 Lifter Strut Spacing: Verify that the spacing matches the spacing of the planted crop as shown in Figure 4-4.

A = B/2 Center of frame to center of strut

B = Row spacing

C = Space appropriate for size of beets. (This space is the pinch point.)

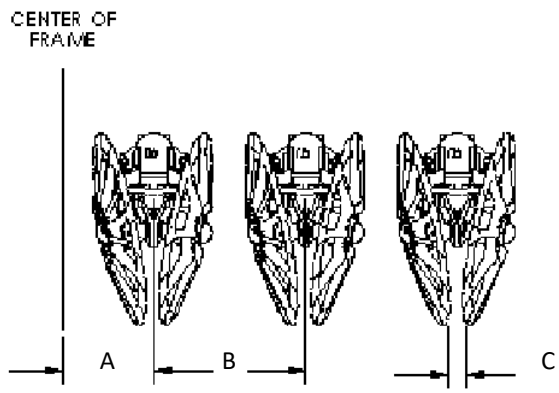

Figure 4-4: Lifter Strut Spacing

NOTE: Refer to Section 6.9, Operating the Harvester, for pinch point spacing guidelines.

4.2.2 Hydraulic Tank Oil Level and Valve Position: Refer to section 11.0, Lubrication and Maintenance, for the service schedule, oil type, and filter replacement info. "Full Cold Line" on the decal should be at the dimension shown in Figure 4-5.

CAUTION: Valves (1 & 2) must be open prior to engaging the PTO or system failure will occur. Valves in Figure 4-5 are shown in the open position.

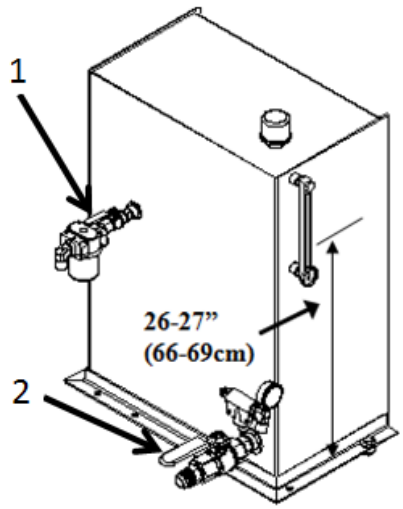

Figure 4-5: Hydraulic Oil Level

4.2.3 Shield Placement: Before starting, be sure to secure the shields in operating position (closed position).

4.2.4 Gearbox Oil Level: Check all gearbox oil levels before operating. Refer to section 11.0, Lubrication and Maintenance, for oil type and fill level information.

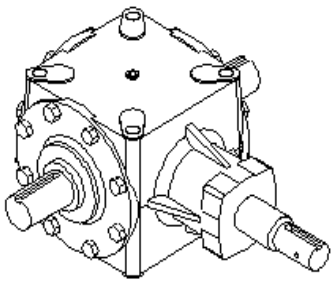

Figure 4-6: Gearbox

4.2.5 Greasing: Refer to section 11.0, Lubrication and Maintenance, for grease type and frequency requirements.

IMPORTANT: Use only hand-held grease guns. Air-powered grease guns can damage your seals. Over greasing may also damage bearing seals. If damage due to over greasing occurs, replace the damaged seals immediately.

4.2.6 Attaching PTO to Harvester:

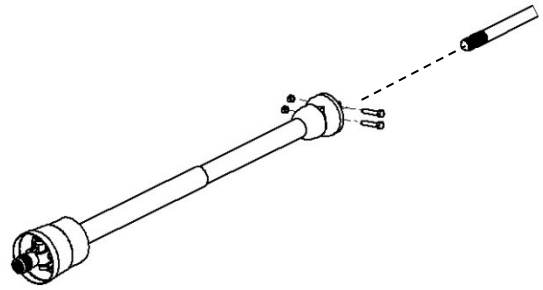

Figure 4-7: Attaching PTO to Harvester

1. Remove the spring pin on the shield.
2. Slide the shield forward.
3. Connect the PTO to the spline shaft.
4. Lock the PTO in place using two $^{5}/_{8}$ inch bolts and nuts.
5. Slide and lock the shield into place.

4.2.7 Raising Boom: Once in the field, follow the steps below before lifting beets.

1. Raise the boom.
2. Set the boom to the desired height by locking pins to one of the 4 holes on the support struts.
3. Lower the boom onto the pins to relieve hydraulic pressure on the hydraulic cylinders.
4. Move the selector valve to the elevated position.

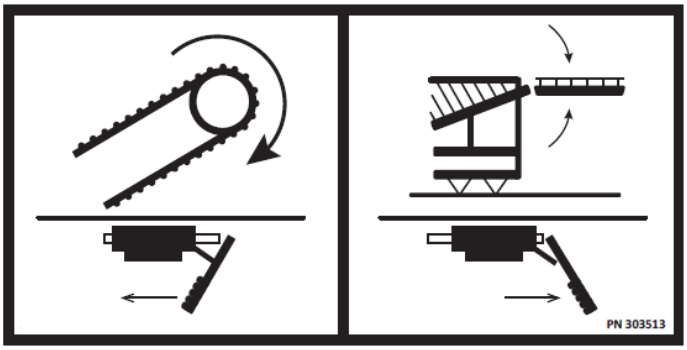

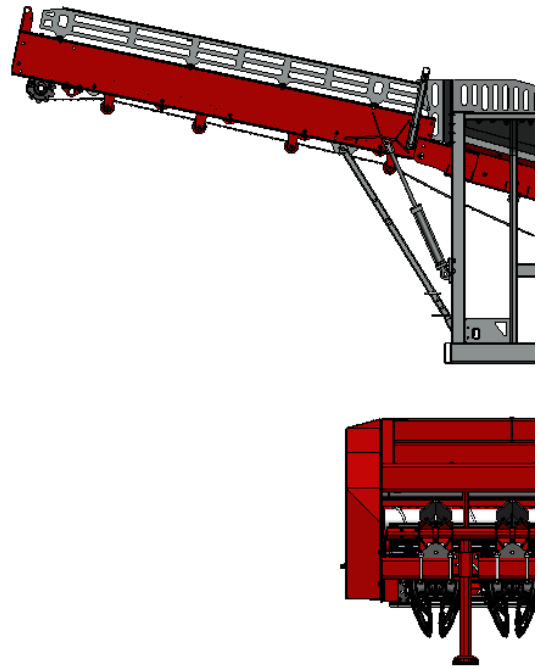

Figure 4-8: Lifted Boom

5.0 ATTACHING AND DETACHING

5.1 Attaching Hydraulic and Electrical Systems

Harvesters are available with ISO couplers or metric adapters. If the hydraulic attachments on your harvester do not fit the tractor, contact your Amity dealer.

CAUTION: To avoid injury from escaping fluid under pressure, relieve the pressure in the system before disconnecting or connecting hydraulic or other lines. Tighten all connections before applying pressure.

Figure 5-1: Attaching Hydraulic Lines

1. Shift to park, shut off the engine, and remove the ignition key before getting out of tractor.
2. Connect all hydraulic lines to tractor as shown in Figure 5-1.
3. Connect the harvester warning light harness to the tractor. Make sure the harvester warning lights operate with the tractor warning lights and turn signals.
4. Connect the control monitor or switchbox to the harness routed into the tractor cab.

NOTE: Make sure to use hydraulic motor case drain where it applies.

NOTE: When operating with Power Beyond, use a load sense line to reduce the risk of damaging components.

5. 5.2 Attaching Harvester to Tractor Drawbar

6. Adjust the tractor drawbar (see Tractor Preparation, section 4.1.1).
7. Remove the tractor hitch pin.
8. Install required bushings into pull plate.
9. Adjust the hitch height.
10. Shift to park, shut off the engine, and remove the ignition key before getting out of tractor.
11. Line up the pull plate with the drawbar.
12. Place hardened washer between the drawbar and pull plate, and install shims as necessary.
13. Lubricate and reinstall the hitch pin.
14. Connect the safety chain to the drawbar supporting structure.

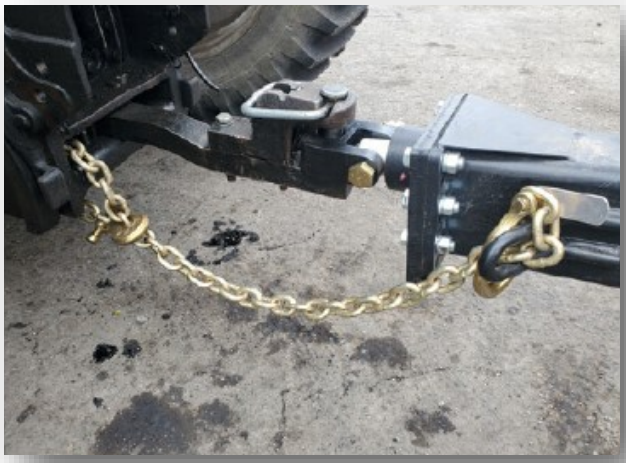

Figure 5-2: Attaching Harvester to Tractor Drawbar

5.3 Attaching PTO Driveline

CAUTION: To avoid bodily injury or death, shut off the tractor and lower the machine to the ground before attaching the PTO driveline.

IMPORTANT: Keep the driveline and powershaft splines clean of dirt, paint, and debris.

Figure 5-3: Attached PTO Driveline

1. Shift to park, disengage the PTO, lower the machine to the ground, relieve hydraulic pressure, stop the engine, and remove the ignition key.
2. Raise the tractor PTO shield.
3. Lubricate splines on tractor PTO output shaft.
4. Pull back on the PTO collar until it latches.
5. Align the splines between the harvester driveline and the tractor PTO shaft. Push the driveline onto the shaft until the collar snaps forward on the yoke.
6. To ensure the PTO is secure, pull back on the shield. Do not pull on the collar, as this will release the latch.
7. Lower the tractor PTO shield.

5.4 Using Stands

CAUTION: Always use stands when working on, near, or underneath the harvester.

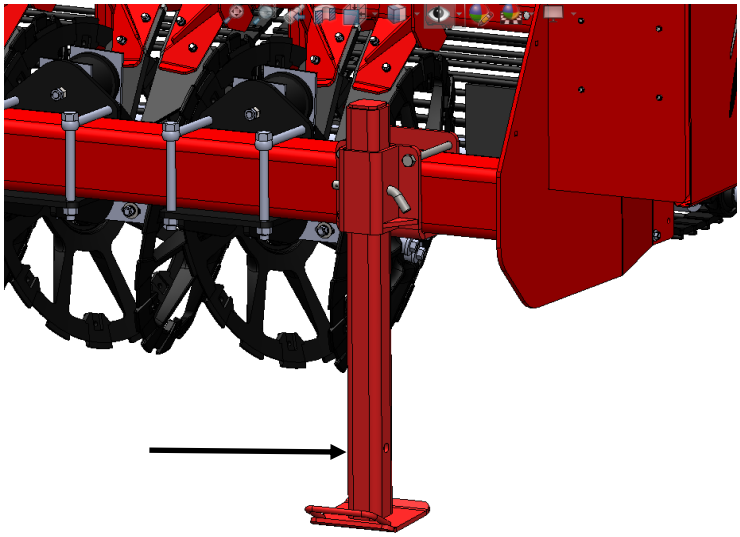

Figure 5-4: Amity Stand

6.0 OPERATING THE HARVESTER

6.1 Startup

1. Ensure that you, bystanders, and all objects are clear of the harvester before starting.
2. Check the PTO to ensure it is not engaged.
3. Start the tractor and bring the throttle to an idle.
4. Engage the PTO.
5. Throttle up to 1000 PTO RPM and ensure the boom is raised before lifting any beets.

CAUTION: The PTO must be turning if any beets are present on the grabroll bed or if the harvester is lifting beets. Engaging the PTO with a loaded grabroll bed can cause belt damage.

6.2 Field Operating Speed

The harvester should be operated at speeds specific to the conditions; typical speeds are 3-5 mph (4.8 -8 km/h).

Changing speed may affect the function of the machine, creating the need for other operating adjustments. Refer to section 12.0, Troubleshooting, if problems occur.

6.3 Turning Radius

Turning at the end of the field while pulling the harvester requires a wide area. One way to accommodate the large turning radius is to plant headland rows. Amity recommends a minimum of 48 headland rows on each end of the field.

IMPORTANT: Failure to provide a sufficient turning radius for the tractor and harvester may lead to damage of the rowfinder assembly, active depth control wands, and/or tractor tires.

6.4 Break-In Period

After an initial 5 hours of normal field operation, check the apron chain tension and all fasteners, lug nuts, rollers, and lifter struts. Refer to section 7.0, Adjustments, if adjustments are required.

After checking the items listed above, do a general check of all major systems and components before continuing.

6.5 Field Cleaning

The harvester will collect mud at different rates during operation depending on soil conditions. It is important to clean the machine every two hours, or more often if the conditions demand.

IMPORTANT: If left unclean, mud will clog the machine and cause imminent damage. Frequently clean the machine to avoid damage.

6.6 Lifter Struts

Amity offers two styles of lifter struts: steel spacer tubes that hold the lifter strut securely in position for lifting in normal soil conditions or an optional rubber bumper for use in rocky conditions. The rubber bumper compresses when the wheels strike a large rock and allow the assembly to move upward. The movement minimizes wheel damage.

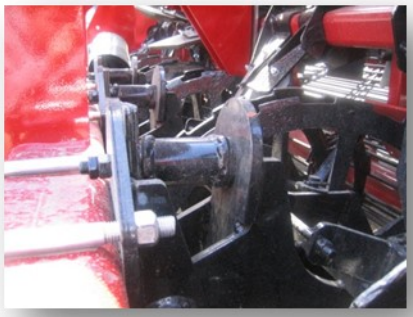

Figure 6-1: Lifter Struts

6.7 Leveling Adjustment

6.7.1 Manual: To obtain optimal performance of the harvester, the machine must be level from left to right and front to rear while harvesting. The rear struts can be adjusted to compensate for a harvester that is not level. See section 7.3 for adjustment instructions.

Figure 6-2: Manual Leveling Adjustment

6.7.2 Automatic Depth Control (ADC): ADC is an optional feature that automatically adjusts the lifting depth for optimal performance. No manual depth adjustment is required if your Amity beet harvester has this feature.

Figure 6-3: ADC Depth Wands

6.8 Row Finder

Amity harvesters have the option of a hydraulic row finder attachment. The Row finder helps keep the lifter struts directly in line with crop rows. See section 7.1 for adjustments.

Figure 6-4: Row Finder

6.9 Digging Depth

Digging depth varies with soil and crop conditions. Three inches (7.62 cm) is a good starting point. Actual digging depth is best determined by checking the depth in several areas after harvesting 100 feet (30 meters).

IMPORTANT: Though 3 inches (7.62 cm) is a good starting depth, the shallowest possible depth to lift whole beets should be used. Digging shallower will extend the life of the machine.

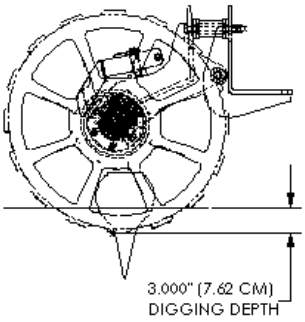

Figure 6-5: Digging Depth

6.9.1 Pinch Point Spacing and Position

The pinch point position and spacing should be placed to allow maximum beet yield while minimizing the amount of excess soil and debris entering the machine. See sections 7.4 and 7.5 for adjustments.

6.10 Wheel Fillers

Optional wheel fillers can be bolted onto lifter wheels to lift more soil, helping reduce beet damage in extremely dry conditions and loss of small beets through lifter wheel spokes. See section 7.6 for installation.

IMPORTANT: Wheel fillers should only be used when necessary. Loading excess soil into machine can reduce machine life and lead to excess wear on components.

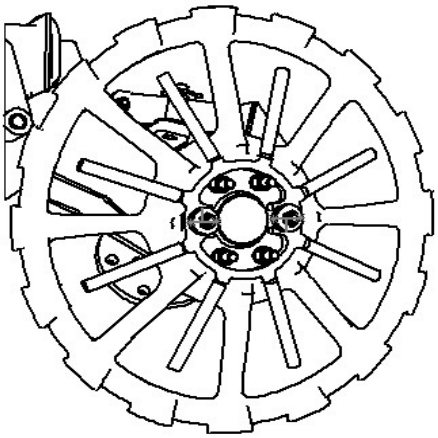

Figure 6-6: Lifter Wheel 53867 with Center Mount Wheel Filler

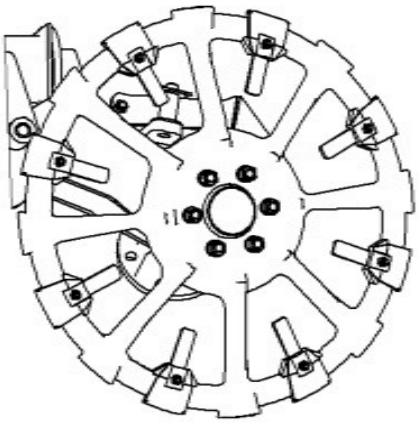

Figure 6-7: Lifter Wheel 69855 with Rim Mounted Filler Tabs. Note: Center mount wheel fillers also available on this lifter wheel.

6.11 Scrapers

Scrapers keep the Lifter Wheels clean by removing mud and dirt off the wheels. In turn, the Lifter Wheels are able to turn freely and lift beets.

Amity lifting struts are available with three types of scrapers: Top, Bottom, and Back.

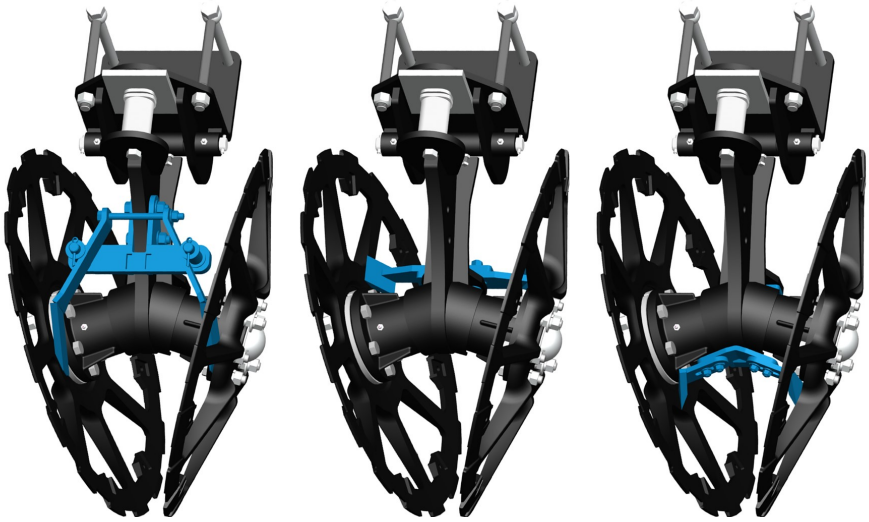

Figure 6-8: Scrapers (Left-Top, Center-Bottom, Right-Back)

6.12 Paddles

Paddles are designed to transfer beets from the lifter wheels onto the apron chain.

Two types of paddles are available for your Amity beet harvester. Standard paddles are required when using rock struts to lift beets and work well in standard soil conditions. Hybrid paddles are available for better cleaning action in heavy, clay-based soils and cannot be used with rock struts. Figure 6-9 shows the two styles of paddles.

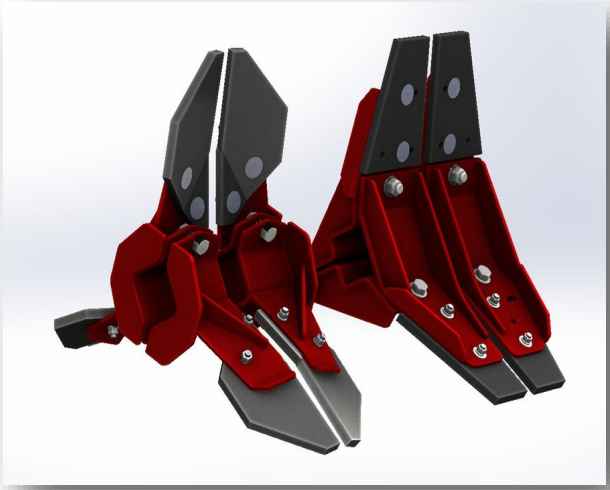

Figure 6-9: Standard Paddle (left) and Hybrid Paddle (right)

Sections 7.8 and 7.9 have information regarding adjustments for paddles and the paddle shaft.

6.13 Apron Chain

The apron consists of several parallel sets of chains. The apron provides the first system to remove dirt, clods, and debris from the beets. See section 7.10.1 for proper apron chain tension.

Figure 6-10: Apron Chain

6.14 Grabroll Bed

Grabroll beds provide the majority of the cleaning action within the harvester. Grabrolls with scrolling provide an aggressive push to beets. Beets are continually turned and flipped over so that the entire beet is cleaned. Scrolled grabrolls will also thoroughly remove mud and break up dirt clods. The smooth grabrolls turn slightly faster than the scrolled and provide a wedging action to remove dirt, tailings, and debris. The grabrolls move beets to the center and to the rear to discharge them into the scrub. The spacing can be adjusted wider or narrower as conditions permit. The smooth grabrolls are spring mounted to allow relief for rocks as they pass over the rolls. See sections 7.12, 7.13, and 7.14 for grabroll spacing and speed adjustments.

Figure 6-11: Grabroll Bed

6.15 Scrub Chain

The scrub chain lifts beets from the rear grabrolls to the tank.

The inside chain typically runs faster than the outside chain, providing additional cleaning.

NOTE: The larger the difference in the chain speed, the greater the chance of additional damage to the beets.

Figure 6-12: Scrub Chain

6.16 Elevator Chain

The elevator chain unloads beets from the tank into the truck or cart.

Figure 6-13: Elevator Chain

6.17 Machine Shutdown

To ensure maximum life of the machine, follow this procedure when stopping:

1. Raise the harvester out of the ground with the PTO still engaged. Continue running the PTO at 1000 RPM until the grabroll bed is empty and the harvester is completely clear of beets.

2. Once there are no beets left in harvester, throttle the tractor down to idle and disengage the PTO.

CAUTION: When shutting down or reducing ground speed, the PTO must remain turning at 1000 RPM until the harvester is completely clear of beets. Failure to allow the necessary time for the machine to cycle through beets will result in imminent damage to the drivebelt and/or other components.

7.0 ADJUSTMENTS

7.1 Row Finder

When harvesting, the row finder wands should be adjusted like Figure 7-1 such that there is 5 inches (12.7 cm) of contact between the ground and row finder wands. Adjustment spring (B), shown in Figure 7-1, can be adjusted to apply more down pressure to ensure constant contact with the beet row.

Likewise, the row finder wands should be angled down when lifted out of the ground. Dimension (A) can be adjusted using nuts (D).

Adjusting Height (E):

1. To change height (E) of the row finder, loosen bolts (C).
2. Adjust jam nuts (G) to desired height.
3. After adjusting height (E), tighten bolts (C).

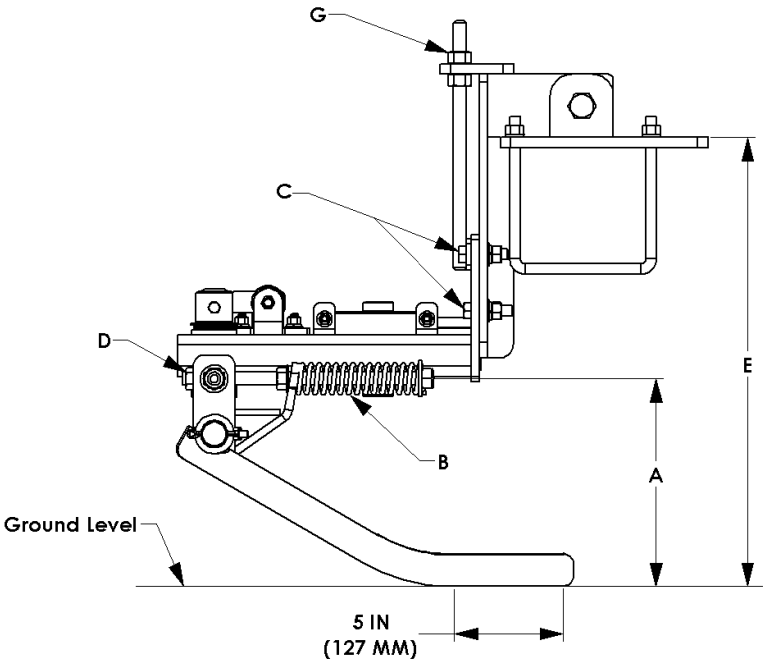

Figure 7-1: Row Finder Adjustment

NOTE: The wands should be angled down slightly when the machine is out of the ground. This will create down pressure from spring (B) when the machine is lowered to digging depth.

7.2 Front Hitch

Using the hydraulic cylinders on the front hitch, raise or lower the front of the machine to achieve proper digging depth.

NOTE: Hitch should be as level as possible. The pull plate can be adjusted to compensate.

CAUTION: Raise the front of the machine to the highest position when turning or traveling at high speeds.

Figure 7-2: Front Hitch

7.3 Manual Rear Leveling (Non-ADC)

1. Raise the rear of the harvester with the hydraulic cylinders.
2. Add or remove cylinder stops as necessary.
3. Lower the rear of the harvester onto the stops.

NOTE: A 1 inch (2.5 cm) stop in a rear cylinder provides approximately 1 inch (2.5 cm) of lift in the corresponding front side.

NOTE: The harvester might not be level as a result of the weight of the extended boom. Adjusting the rear struts will help solve this problem.

Figure 7-3: Manual Rear Leveling

7.4 Pinch Point Position

The pinch point position can be adjusted by a spacer (G), part number 50139. In muddy conditions, roll the pinch point forward by adding spacers. This will pop the beet faster and with less mud. For dry or hard digging conditions, roll the pinch point back by removing spacers, giving the wheels a longer time to lift the beet and reduce breakage in the ground. The extra dirt will lift the beets high enough for the paddles to send them into the machine. To adjust the pinch point position:

1. Loosen the two nuts on the front of the strut.
2. Add or remove spacers (G) to adjust the pinch point forward or back.
3. Re-tighten the hex nuts when desired position is reached.

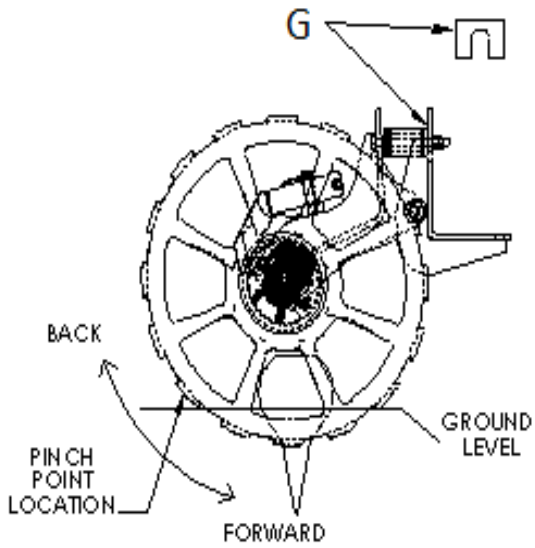

Figure 7-4: Pinch Point Adjustment

NOTE: The addition of one spacer (G) will decrease the pinch point height by ½ inch (1.3 cm) and two spacers by 1 inch (2.5 cm). Numbers are approximate.

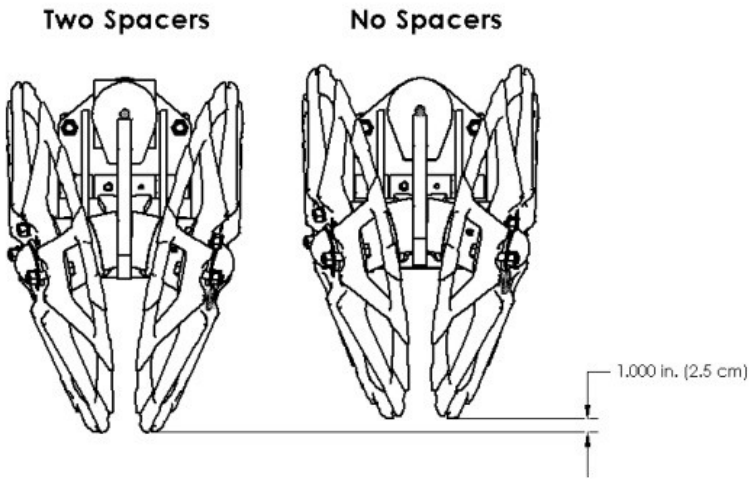

Figure 7-5: Pinch Point Height

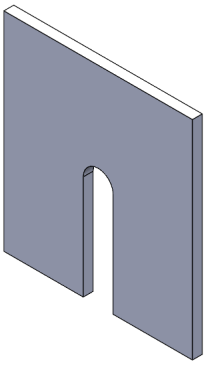

Figure 7-6: Lifter Strut Spacer

NOTE: If harvester is equipped with rock cushion struts, be sure that the rock cushion is tensioned to 4.5 inches (11.4 cm). If the rock cushion is not tensioned properly it will affect pinch point position. Also, it may decrease performance of the rock cushion.

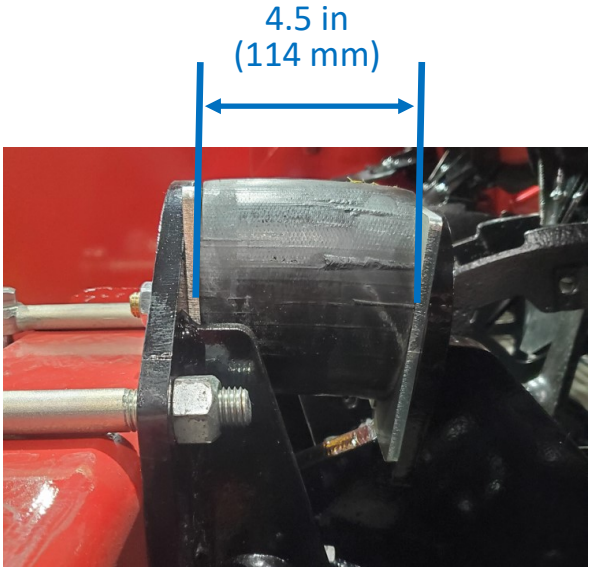

Figure 7-7: Rock Cushion Tension

7.5 Pinch Point Width

Matching pinch point to crop size is important to maximize yield and minimize tare. If the pinch point is too wide, smaller roots may be left in the ground, resulting in a larger digging depth. In turn, more dirt will be put in the harvester. If the pinch point is too narrow, larger roots may be sliced. The pinch point width is adjusted by changing the quantity of half-moon spacers (B), part number 50747. To add or remove spacers:

1. Loosen the hex nuts holding the lifter wheel tight to the hub. Only the center bolt on the half-moon spacer is required to be removed. Adjust the other half of the spacer to allow another spacer to be added or removed.
2. Add or remove spacers (B) as necessary. It is most common to work in sets of four half-moon spacers.
3. Tighten the lifter wheel bolts.

NOTE: The addition or subtraction of one spacer (B) will add or subtract 0.1875 inches (4.8 mm), respectively, from the pinch point width.

NOTE: Pinch point may need to be readjusted over time due to wear on the lifter wheels.

IMPORTANT: As a general rule, the pinch point spacing (A) should be adjusted as shown in Table 7-1.

Table 7-1: Pinch Point Width

Pinch Point Width	Average Beet Weight
1½-1¾ in. [3.8-4.4 cm]	0.9-1.2 lb. [0.41-0.54 kg]
1¾-1⅞ in. [4.4-4.7 cm]	1.1-1.5 lb. [0.50-0.68 kg]
1⅞-2 in. [4.7-5.0 cm]	1.3-1.7 lb. [0.59-0.77 kg]

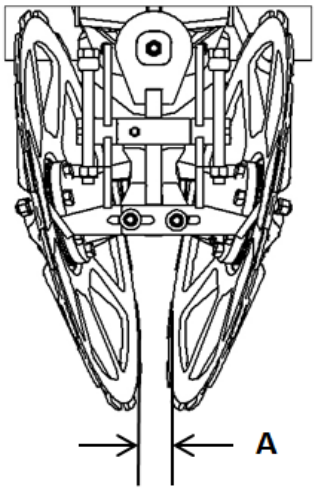

Figure 7-8: Pinch Point Width

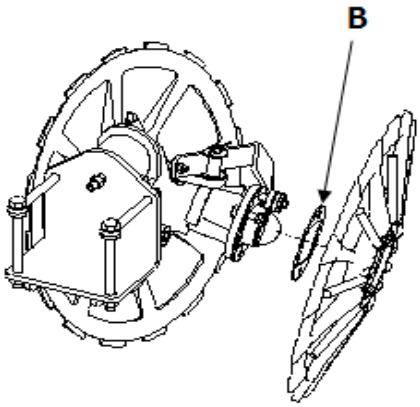

Figure 7-9: Pinch Point Spacer Adjustment

7.6 Wheel Fillers

7.6.1 Adding or Removing Center Mount Wheel Fillers

1. Remove the lock nut, lock washer, and flat washer from bolts (B) as shown in Figure 7-10.
2. Add or remove the center-mount wheel filler.
3. Replace the fasteners.

NOTE: If bolts (B) are removed, they must be reassembled in holes (C) shown below in Figure 7-12. The bolts must line up exactly in line with the opposite spokes of the lifter wheels or they will not line up correctly on the wheel fillers.

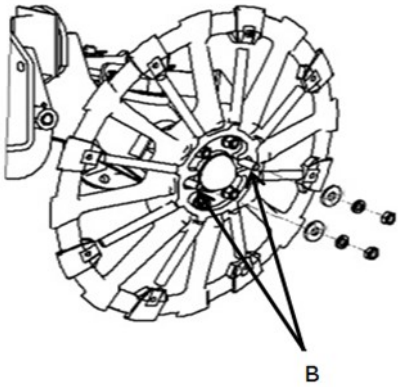

Figure 7-10: Adding or Removing Center-Mount Filler Wheels

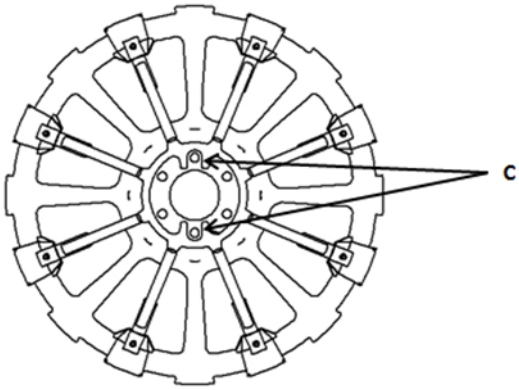

Figure 7-11: Center-Mount Wheel Filler Hole Alignment

7.6.2 Adding Rim-Mount Filler Tabs

1. Insert the filler tab into the slot on the backside of the lifter wheel.
2. Fasten with a bolt and nut as shown in Figure 7-12.
3. Repeat steps 1 and 2 for the remaining seven tabs.

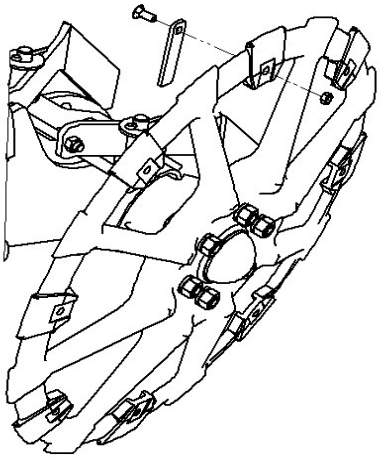

Figure 7-12: Adding or Removing Rim-Mounted Filler Tabs

7.7 Scrapers

7.7.1 Top Scrapers

Adjust bolt (A), shown in Figure 7-13, to move scrapers out to the lifter wheels.

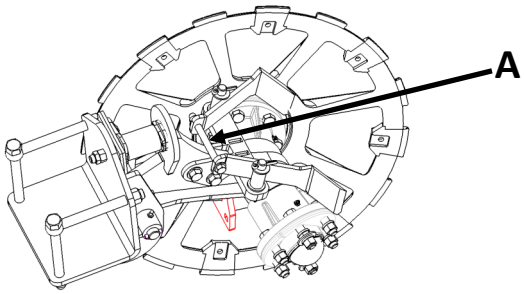

Figure 7-13: Top Scrapers

7.7.2 Bottom Scrapers

1. Loosen bolts (B), shown in Figure 7-14.
2. Adjust scrapers to the desired position.
3. Tighten bolts (B).

7.7.3 Back Scrapers

1. Loosen bolts (C), shown in Figure 7-15.
2. Adjust scrapers to the desired position.
3. Tighten bolts (C).

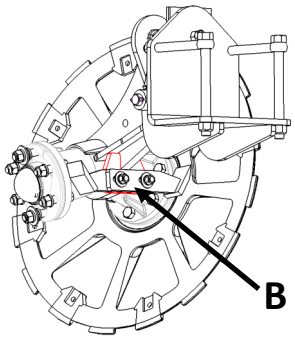

Figure 7-14: Bottom Scrapers

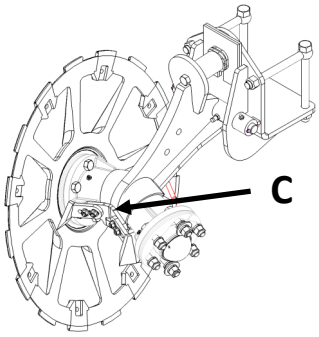

Figure 7-15: Back Scrapers

NOTE: Rotate the lifter wheels a full 360° after adjusting the scrapers to ensure clearance.

7.8 Paddle Shaft Position

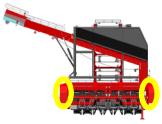

When operating with a steel spacer in the lifter strut, set the paddle shaft to clear the lifter wheel rims to ensure that all beets get moved to the apron chain.

NOTE: The paddle shaft is driven by a slip clutch. See section 7.22, Slip Clutches, for more information.

CAUTION: When the harvester is equipped with rock struts, the distance (C), shown in figure 7-16, between the lifter wheels and paddle shaft must have at least 1 inch. (2.5 cm) of clearance to protect the paddle shaft from the lifter wheels in the event of contact with a rock.

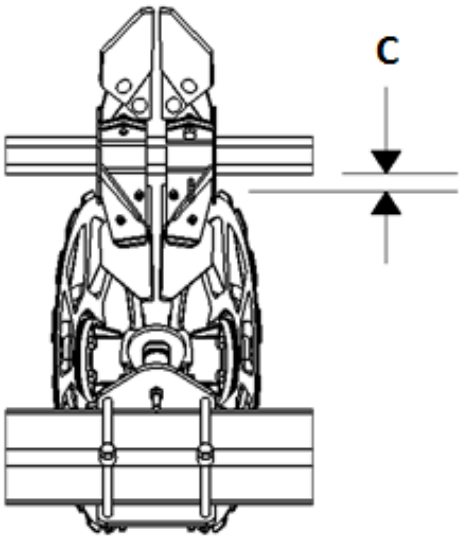

Figure 7-16: Paddle Shaft to Lifter Wheel Rim Dimension

1. Shift to park, disengage the PTO, lower the machine to the ground, relieve hydraulic pressure, stop the engine, remove the ignition key, and wait for all moving parts to stop before dismounting.
2. Lower machine onto stands or blocks to take weight off the lifter wheels.
3. Open the left and right access doors.

4. Loosen the bearing mounting bolts and jam nuts on the adjusting bolts.

5. Measure distance between the paddle shaft and the rim of the lifter wheels.

6. Turn the adjusting bolt to give a minimum of 1 inch (2.5 cm) of clearance between the paddle shaft and lifter wheels. This dimension is critical, especially when using rubber bumpers (rock struts).

NOTE: It may be necessary to loosen the paddle shaft chain on both sides to provide slack to allow the paddle shaft to move. See section 7.21.1, Paddle Shaft Chain.

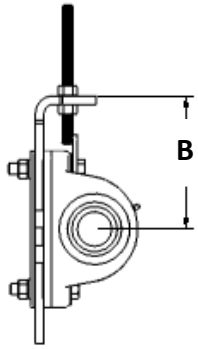

Figure 7-17: Apron/Paddle Shaft Chain Tension

7. Tighten the shaft mounting bolts and the jam nuts on the adjusting bolts. Set the same dimension (B), shown in Figure 7-17, on both sides and secure the mounting fasteners in position. On wide-frame harvesters, set the same dimension (B) on the center mount as on the outer mounts.

8. For harvesters equipped with rock struts, place a 4 x 4 inch (8.9 x 8.9 cm) block of wood under one of the lifter wheels and lower the entire weight of the machine down on this strut.

9. The rim should clear the shaft by at least ½ inch (1.3 cm). If the rim is touching the shaft, raise the paddle shaft until it clears by at least ½ inch (1.3 cm).

10. If the bumper compression is adjusted, raise the wheel off the block and lower it again. Check the clearance again.

11. Repeat the procedure with each set of lifter wheels. This will ensure that none of the wheels will contact the paddle shaft.

12. Close the access doors before starting the machine.

7.9 Paddles

The paddles are adjustable, in and out, depending on wet or dry harvest conditions. Moving paddles toward the wheels will clean the rim of the wheel and aid in rotation. Adjusting the paddles in or out should be done after making any paddle shaft height adjustments.

IMPORTANT: Excess contact may stop lifter wheel rotation.

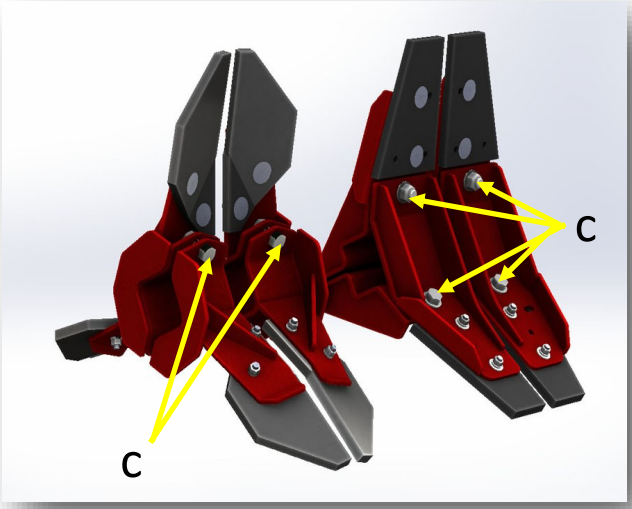

Figure 7-18: Standard Paddle and Hybrid Paddle Adjustment

1. Loosen lock nuts (C), shown in Figure 7-18, on the paddle mounts.

2. Move the paddles to the desired position.

3. Tighten lock nuts (C).

7.10 Apron Chain

7.10.1 Apron Chain Tension: There are two options available for the apron chain: hook rod chain and belted chain. Tension of the apron chain should not be excessively tight; however, the chain should never drag on the ground or droop enough on the top to allow beets to be lost out the sides of the machine.

NOTE: For hook rod chain, remove links if possible before tensioning. Hook rod chain is a high-wear item and links may need to be replaced frequently. See section 11.9, Hook Rod Chains.

To adjust the hook chain:

1. Shift to park, disengage the PTO, lower the machine to the ground, relieve hydraulic pressure, stop the engine, remove the ignition key, and wait for all moving parts to stop before dismounting.
2. Open the left and right access doors.
3. Adjustments on the apron chain tension are made by moving the front idler shaft, shown in Figure 7-19.

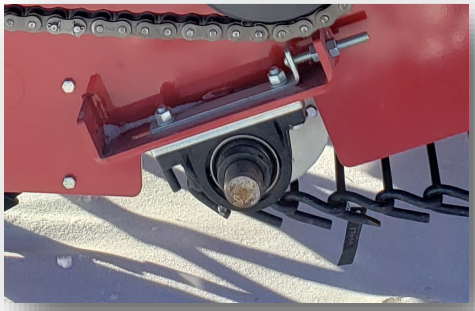

Figure 7-19: Apron Chain Front Idler Shaft

4. To adjust the shaft, loosen the jam nuts holding the adjustment rods on the bearing mounting arms.
5. Use the adjusting rod and slide the bearing mounting arms apart or together.

NOTE: Adjusting the lower shaft too close to the lifter wheels can cause loss of beets.

6. Always measure the dimension between the shaft centers when making adjustments, keeping the dimension equal on the left and right sides.

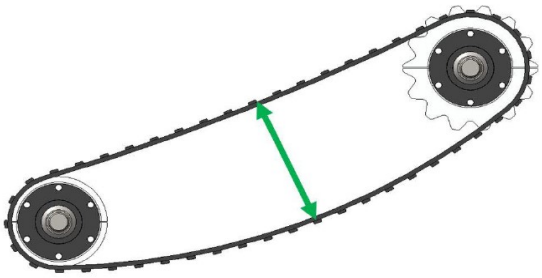

Figure 7-20: Distance between Top and Bottom Chains

NOTE: Distance (A), shown in Figure 7-20, between top and bottom chain should be kept at 11-12 inches (27.9 – 30.5 cm), measured from the centerline of chains.

7. Tighten the jam nuts on the adjusting rods, and be sure the adjusted apron chain does not contact the lifter wheels.
8. Close and secure the access door before starting the machine.

7.10.2 Replacing Apron Chain

1. Shift to park, disengage the PTO, lower the machine to the ground, relieve hydraulic pressure, stop the engine, remove the ignition key, and wait for all moving parts to stop before dismounting.
2. Open the left and right access doors.
3. Loosen the jam nuts holding the adjustment rods on the bearing mounting arms.
4. Slide the front bearing mounting arms backward to the loosest position.
5. Rotate the shafts until the splice link is accessible, and then disconnect the chain on both ends of the link.
6. Remove the apron chain or attach the new chain to the old chain before its removal. Use it to thread the new chain over the sprockets.
7. Thread a new chain over the sprockets, bringing the ends together.
8. Hook the ends of the chain together.
9. Repeat steps 5-8 for each apron chain.
10. Use the adjusting rod to slide the lower apron shaft into position to give the required tension, making sure the apron chain does not contact the lifter wheels. See previous section for chain tension.
11. Always measure the dimension between the shafts when tensioning. Keep them equal on the left- and right-hand sides.
12. When correctly positioned, tighten the jam nuts on the bearing mounting arm adjustment rods.
13. Close the access doors on both sides before starting the machine.

7.10.3 Squaring Shafts

It is important to square and align the upper and lower apron shafts to maximize chain life. Any time a shaft is replaced or adjusted make sure to align and square the shafts by measuring from shaft to shaft to make them parallel and corner to corner to make them square.

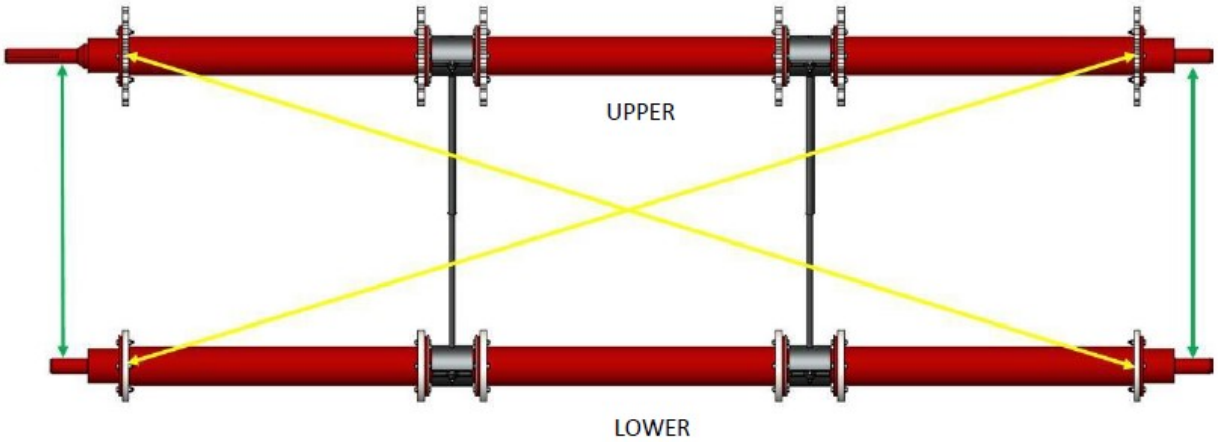

Figure 7-21: Aligning and Squaring Shafts

7.11 Drive Belt

7.11.1 Belt Tension

1. Shift to park, disengage the PTO, lower the machine to the ground, relieve hydraulic pressure, stop the engine, remove the ignition key, and wait for all moving parts to stop before dismounting.
2. Open the access door.
3. Adjust the nut (B), shown in Figure 7-22, until spring length (A) is 13.5 inches (34cm).
4. Lock double nuts (B).
5. Close and secure the access door before starting the machine.

7.11.2 Replacing Belt

1. Follow steps 1 & 2 from above.
2. Loosen nut (B), shown in Figure 7-22, until the belt is loose.
3. Remove the old belt and install a new belt.
4. Tighten nut (B) until spring length (A) is 13.5 inches (34 cm).
5. Lock double nuts (B) and check the alignment of the sheaves.
6. Make sure belt is in the proper grooves, and secure the access door before starting the machine.
7. Adjust nuts (D) to readjust rock trip spring compression (C) to 8.5 in. (21.7 cm)
8. Close access door.

IMPORTANT: Grabrolls must not touch each other under any operating conditions.

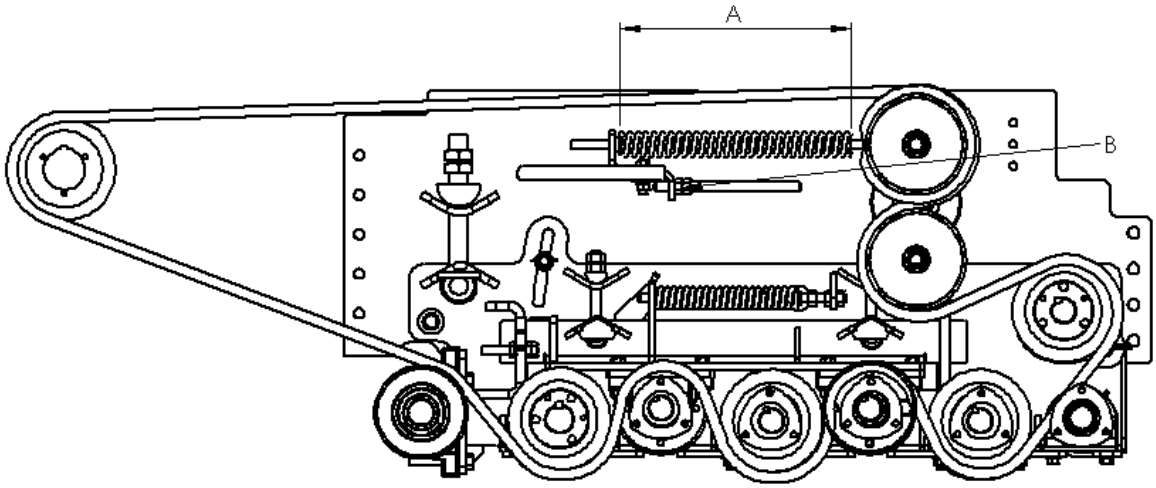

Figure 7-22: Drive Belt Adjustments

7.12 Grabroll Spacing

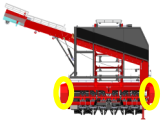

Adjusting the space between grabrolls will cause the beets to be cleaned at differing degrees. Muddier conditions may require more cleaning than dry conditions. To increase the cleaning action, increase the gap between grabrolls.

1. Shift to park, disengage the PTO, lower the machine to the ground, relieve hydraulic pressure, stop the engine, remove the ignition key, and wait for all moving parts to stop before dismounting.
2. Open the access door.
3. Adjust bolt (G) shown in figure 7-23, to change the gap between smooth grabrolls and the scrolled grabrolls.
4. Readjust rock trip spring compression (C) to 8.5 in. (21.7 cm).
5. Readjust the drive belt to the proper tension. (See also section 7.11.1.)
6. Close access door.

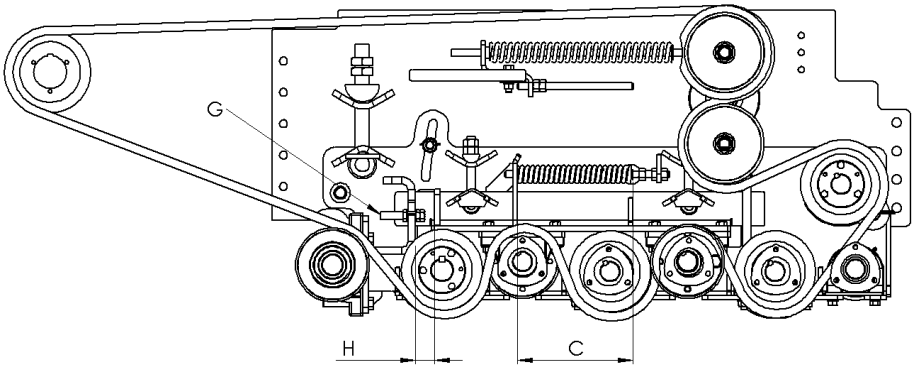

Figure 7-23: Grabroll Spacing Adjustment

7.13 Grabroll Height

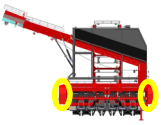

Smooth grabroll height adjustments affect the amount of time beets remain on the grabrolls cleaning, as well as the effectiveness of the cleaning. Decreasing the height of the grabrolls to below that of the scrolled grabrolls will increase cleaning action.

NOTE: Aggressive cleaning action will increase the chance of additional damage to the beets.

1. Shift to park, disengage the PTO, lower the machine to the ground, relieve hydraulic pressure, stop the engine, remove the ignition key, and wait for all moving parts to stop before dismounting.
2. Open the access door.
3. To adjust smooth grabrolls (J), shown in figure 7-24, up or down, use eye bolts (I). Amity recommends adjusting in ¼" increments.
4. Adjust the drive belt to the proper tension. (See 7.11, Drive Belt.)
5. Close the access door.

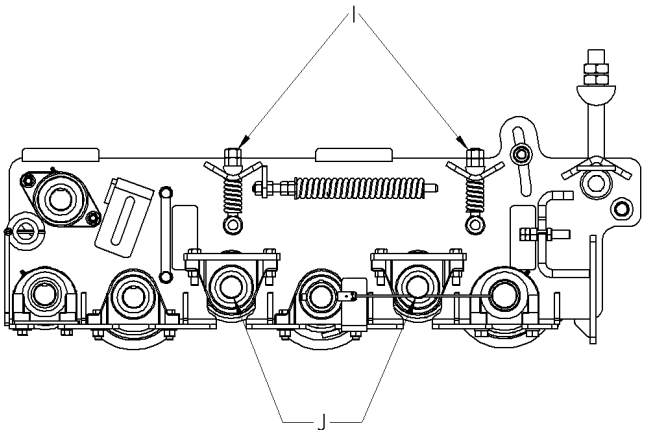

Figure 7-24: Grabroll height Adjustment

7.14 Grabroll Speed

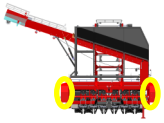

1. Shift to park, disengage the PTO, lower the machine to the ground, relieve hydraulic pressure, stop the engine, remove the ignition key, and wait for all moving parts to stop before dismounting.
2. Open the access door.
3. Remove the grabroll bed drive belt according section 7.11.2 for the front drive belt or section 7.19.2 for the rear drive belt.
4. Remove the sheave (A), shown in Figures 7-25, by first removing sheave bolts.

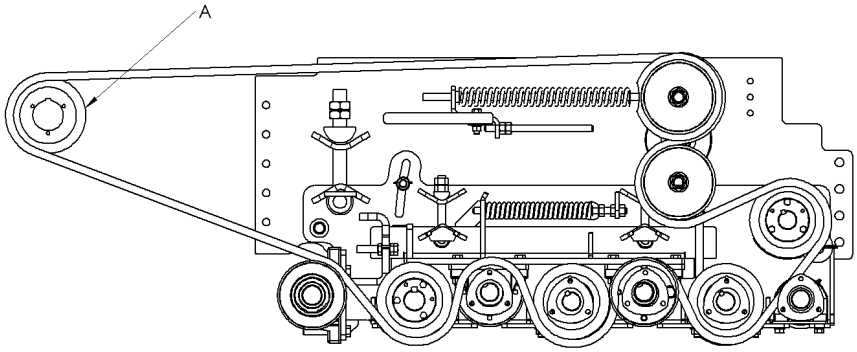

Figure 7-25: Grabroll Speed Adjustment

5. Install the sheave bolts in the previously unused holes in the taper lock hub. Evenly tighten bolts until the sheave is loose.
6. Remove the taper lock hub, key, and sheave from the shaft.
7. Replace the drive sheave to obtain the desired grabroll bed speed. Refer to Table 7-2 for grabroll RPMs and part numbers.
8. Place the sheave on the shaft.

IMPORTANT: Ensure tapered surfaces are clean and free of all lubricants.

9. Place the taper lock hub on the shaft and then insert the key into the shaft and hub.
10. Start the bolts through the taper lock hub into the sheave.
11. Align sheave (A) with the other sheaves and tighten evenly. Be sure the sheaves are aligned with each other after tightening.
12. Reinstall the grabroll bed drive belt.
13. Close the access door before starting the machine.

NOTE: Grabrolls turn at 552 RPM from the factory unless ordered otherwise. A larger shaft sheave is available to speed the rolls to 606 RPM if mud collects on the grabrolls in muddy conditions. A smaller drive sheave is available to slow down the grabrolls to 500 RPM during dry conditions to reduce crop damage. See Table 7-2 for sheave dimensions and part numbers.

Table 7-2: Grabroll Sheaves

Sheave A	Ouside Diameter	Roll RPM	P/N
6.8*	7.15 in 182 mm	606	56647
6.2	6.55 in 166 mm	552	56646
5.6*	5.95 in 151 mm	500	53668

*Available from your authorized Amity dealer

7.15 Rock Trip Spring

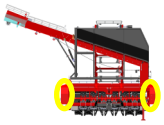

1. Shift to park, disengage the PTO, lower the machine to the ground, relieve hydraulic pressure, stop the engine, remove the ignition key, and wait for all moving parts to stop before dismounting.
2. Open the access door.
3. Adjust nut (D), shown in Figure 7-26, so dimension (C) is 8.5 inches (22 cm).
4. Close the access door before starting machine.

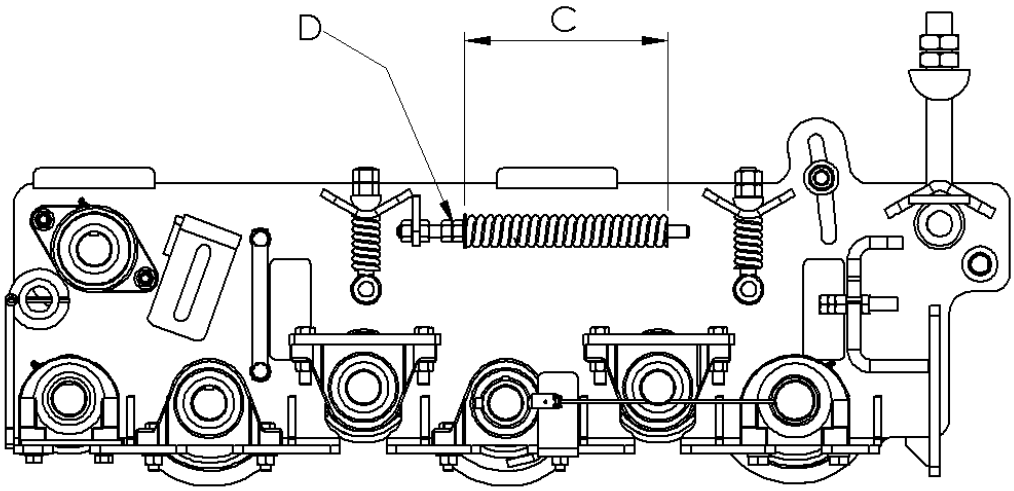

Figure 7-26: Rock Trip Spring Adjustment

7.16 Grabroll Bed Angle

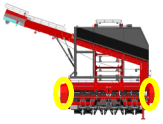

Increasing the angle of the grabroll bed will increase cleaning time; likewise, decreasing the angle will decrease the cleaning time. To change the angle of the bed:

1. Shift to park, disengage the PTO, lower the machine to the ground, relieve hydraulic pressure, stop the engine, remove the ignition key, and wait for all moving parts to stop before dismounting.
2. Open access door.

IMPORTANT: Loosen apron/paddle drive chain.

3. Loosen nut (D), shown in figure 7-27.
4. Adjust eyebolt (E) for the desired bed angle.

IMPORTANT: Allow clearance between lifter wheels and apron chain when adjusting bed angle.

5. Tighten nut (D).
6. Re-adjust drive belt (see section 7.11) and apron/paddle drive chain (see section 7.21).
7. Close access door.

NOTE: To level grabroll bed, set (C) at 17.5 in. (44.5 cm).

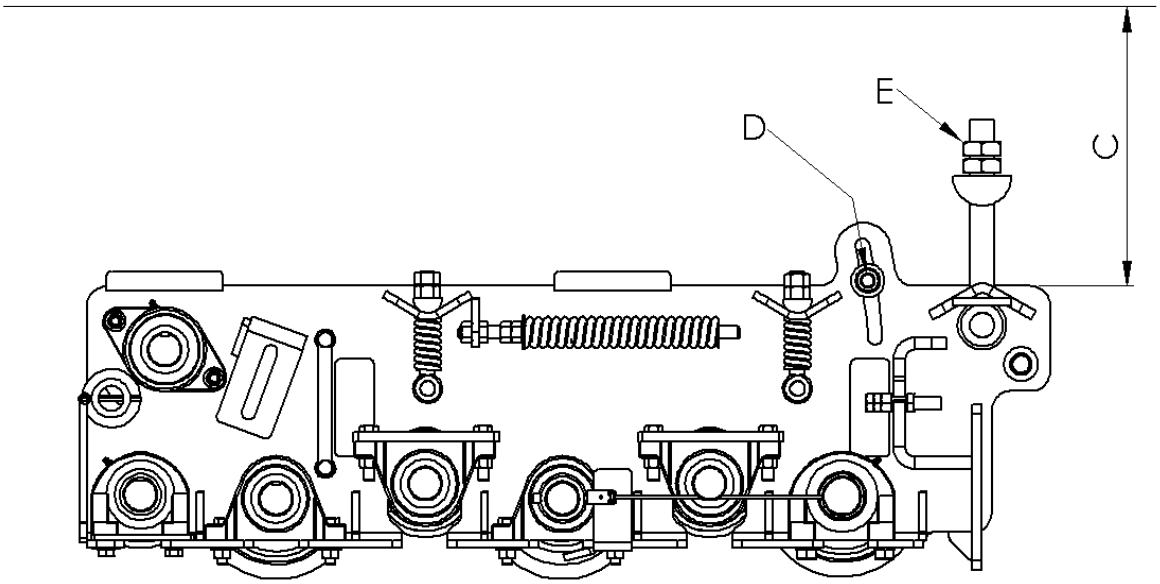

Figure 7-27: Grabroll Bed Angle

7.17 Reverse Grabroll

Grabrolls #2 and #4, shown in Figure 7-28, come set to spin in the same direction as the tractor wheels (opposite grabrolls # 1, 3, and 5).

In dry conditions, to reduce beet damage, a kit is available to make grabroll #4 spin in the same direction as rolls #1, 3, and 5.

7.17.1 Installing Reverse Grabroll Kit (models 2200, 2300, 2400):

1. Shift to park, disengage the PTO, lower the machine to the ground, relieve hydraulic pressure, stop the engine, remove the ignition key, and wait for all moving parts to stop before dismounting.
2. Open the access door.
3. Remove the drive belt.
4. Remove sheave (A) from grabroll #4 and attach to the harvester frame using the stub shaft included in reverse #4 kit (B).
5. Install idler pulley (E) onto grabroll #4 shaft. Tighten both of the lock rollers.
6. Attach sprockets (C) to the shafts on grabrolls #4 and #5 using hubs provided.
7. Reinstall the drive belt with the correct tension (see section 7.19.2).
8. Install drive chain (D) over the sprockets on grabrolls #4 and #5.
9. Close and secure the access door before starting.

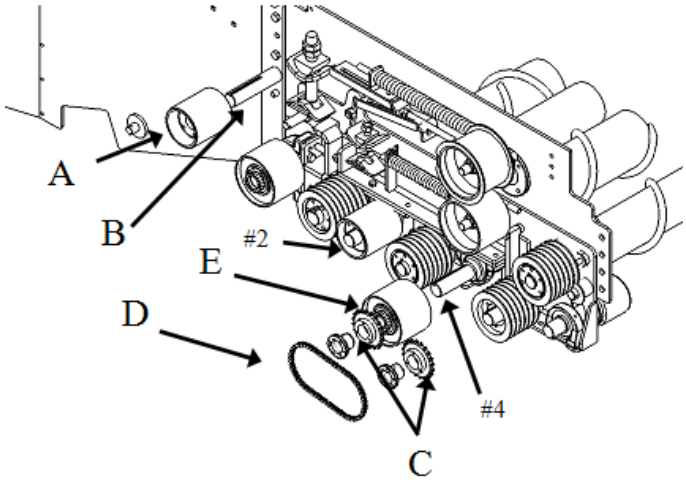

Figure 7-28: Installing Reverse Grabroll Kit

7.17.2 Installing Reverse Grabroll Kit (model 2500):

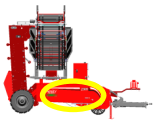

1. Follow steps 1-5 from previous page.
2. Attach sprockets (F), shown in figure 7-29, to shafts on grabrolls #4 and #5 on the right side of the machine, using the hubs provided.
3. Install drive chain (G) over sprockets.
4. Reinstall drive belt to correct tension (see “Drive Belt” within this section).
5. Close and secure all access doors before starting the machine.

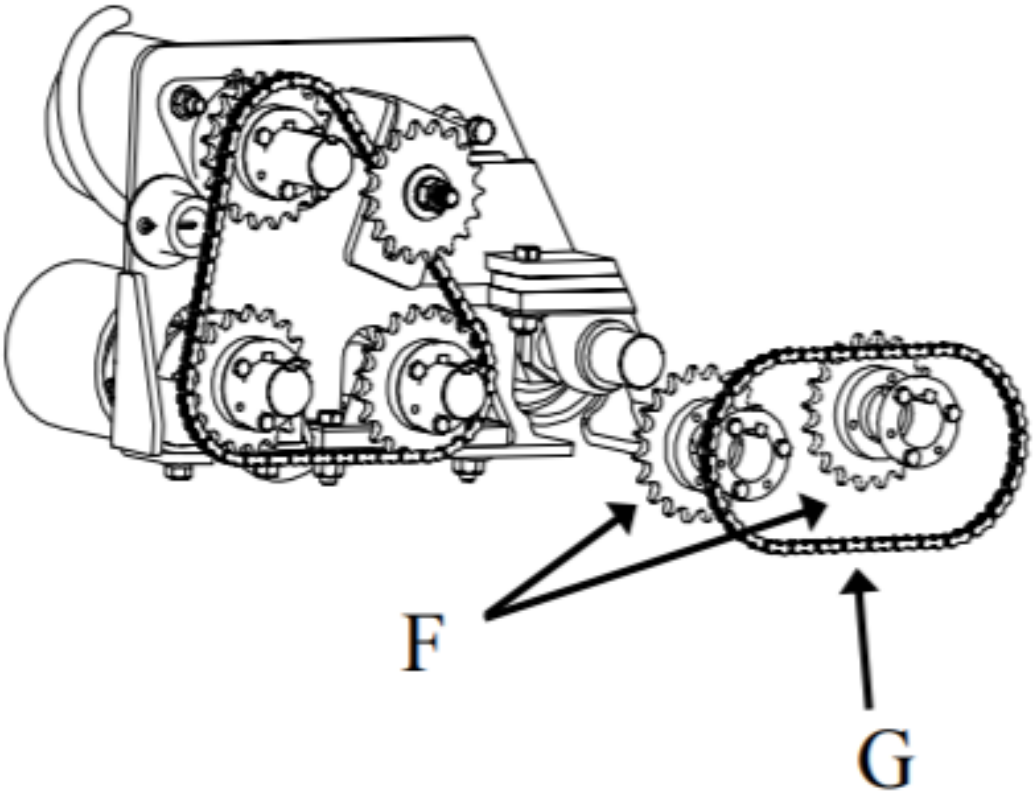

Figure 7-29: Installing Reverse Grabroll Kit (model 2500)

7.18 Roller Chain Tension and Replacement

Roller chains need to be tightened when they are worn or when they jump sprocket teeth.

Each chain has a certain amount of allowable chain movement. To measure the chain movement, hold a tape measure up to the chain, then pull the chain down and then up. (The total amount of movement in the chain should fit the specifications listed within the following sections.) When servicing or replacing roller chains, reset the chain to factory specifications.

Check the alignment of the sprockets periodically during the season and whenever replacing roller chains. To check alignment, lay a straight edge along a machined surface of the sprockets. If there is any misalignment, adjust the sprocket. For sprockets on a shaft with end float, align the sprocket for the normal operating position.

Install the replacement chain around both sprockets, bringing the free ends together on one sprocket. Insert a connector link and secure in place.

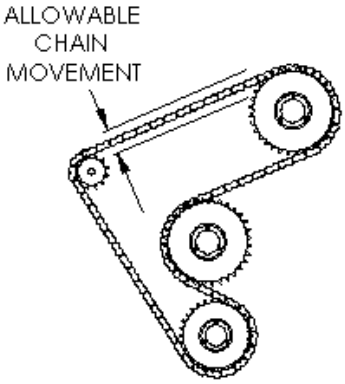

Figure 7-30: Allowable Chain Movement

IMPORTANT: Check chain tension after an initial 5 hours of operation.

7.18.1 Paddle Shaft and Apron Chain:

Paddle Shaft Chain has 1 ½ to 2 inches (3.8 - 5.1 cm) of allowable chain movement, as shown in Figure 7-31.

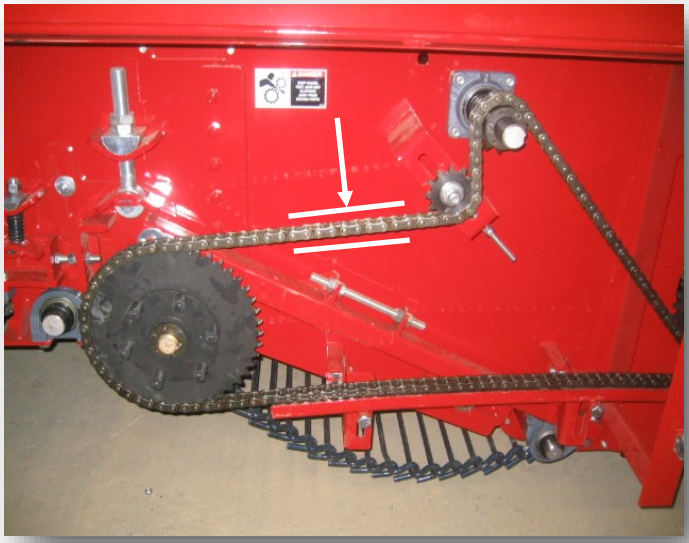
Figure 7-31: Paddle Shaft Chain Tension

7.18.2 Elevator Drive Reduction Chain:

Elevator Drive Reduction Chain has ½ to ¾ inches (1.3-1.9) cm of allowable chain movement, as shown in Figure 7-32.

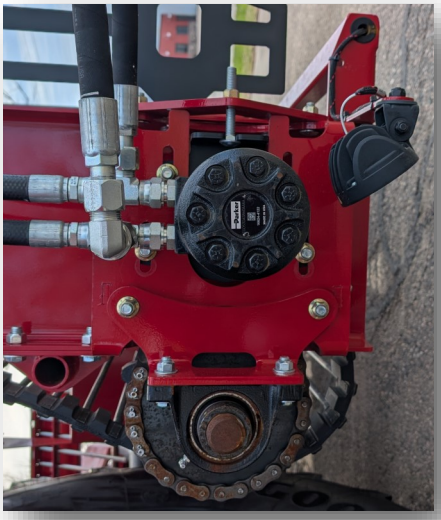

Figure 7-32: Elevator Chain Tension

7.18.3 Grabroll Bed Chain:

Grabroll Bed Chain has ½ to ¾ inches (1.3-1.9) cm of allowable chain movement, as shown in Figure 7-33.

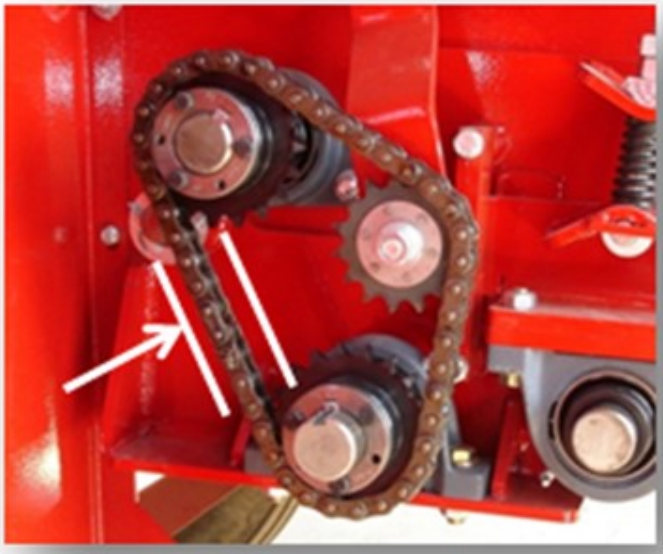

Figure 7-33: Grabroll Bed Chain Tension

7.19 Slip Clutches

Harvesters are equipped with fiber pad slip clutches on the paddle shaft and apron shaft. Some may also have slip clutches on the rear scrub drive. These slip clutches prevent failure of rotating components in the event they stop rotating. All slip clutches are set at the factory, and no field adjustments are necessary.

IMPORTANT: Do not use any type of oil on slip clutches.

Tubes of preset length are housed inside the slip clutch springs. These tubes prevent over-tightening of the slip clutch. Do not remove the preset tubes.

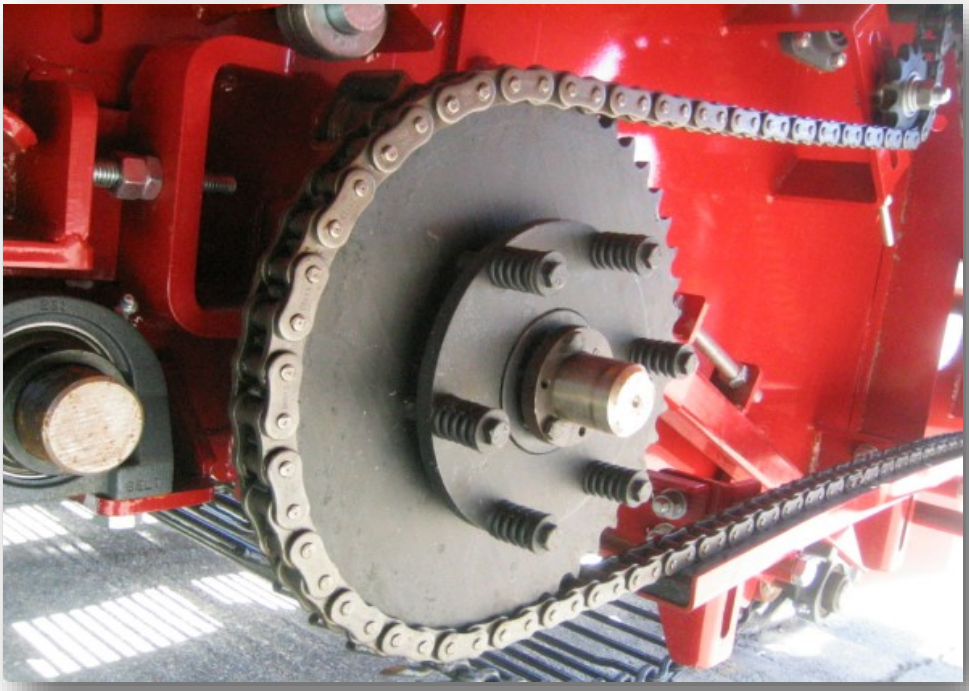

Figure 7-34: Slip Clutches

7.20 Rear Scrub

7.20.1 Scrub Speed

The flow control valves for the scrub hydraulic system are used to set the speed and scrubbing action of the scrub chains. The first flow control sets the speed of the entire scrub, both chains. The second flow control is used to decrease the speed of the outside chain and create a scrubbing action. Below is a figure that shows the path of oil through the system. Only the second flow control is adjustable.

NOTE: The larger the difference in the chain speed, the greater the chance of additional damage to the beets.

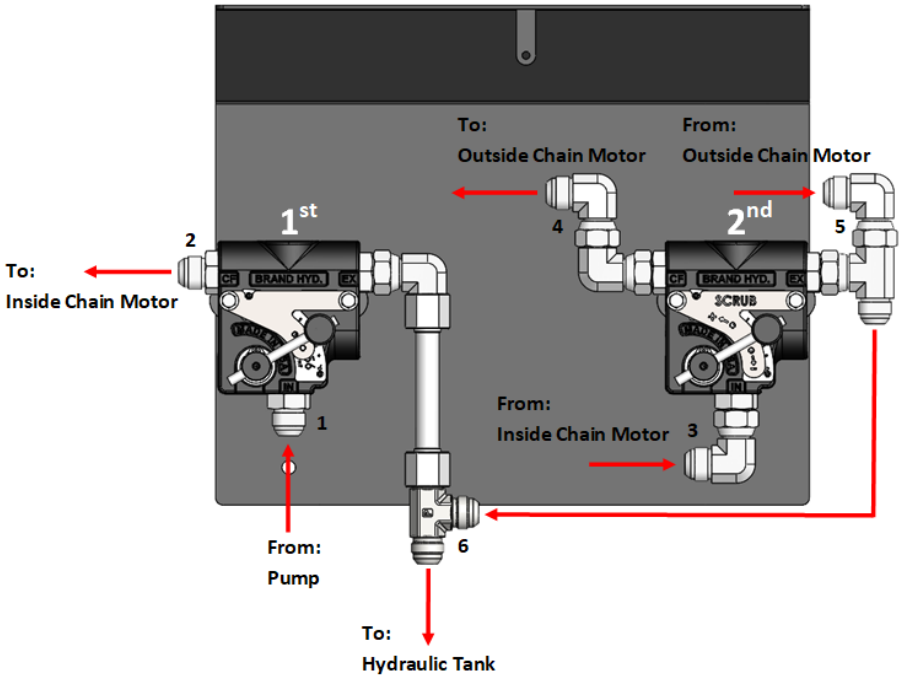

Figure 7-35: Scrub Chain Flow Control Valves

To increase the amount of scrubbing action, rotate the spool on the second flow control counter clockwise (towards the "+"). To decrease the amount of scrubbing action, rotate the spool clockwise (towards the "-"). Rotating the spool fully clockwise will cause the inside and outside chains to run the same speed and eliminate the scrubbing action.

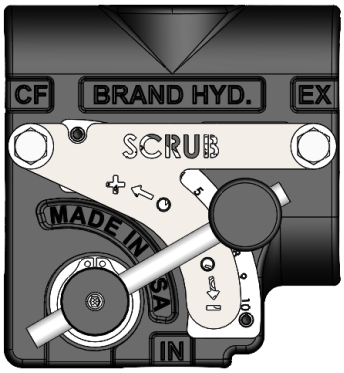

Figure 7-36: Scrub Chain Tension

Note: On tractor driven scrubs the first flow control is not there. It is replaced by the tractors SCV. The SCV will now control the speed of the entire scrub.

7.20.2 Scrub Tension

The scrub roller springs should be tightened as shown in figure 7-37, measuring closed length from the outside of the end hooks. This will ensure that there is constant pressure on the rollers, and subsequently the chains.

This tension will help the scrub to empty the last of the beets into the tank, as well as keeping the chains in their proper position on the sprockets and idler rollers.

IMPORTANT: Always adjust spring tension with a clean, empty scrub.

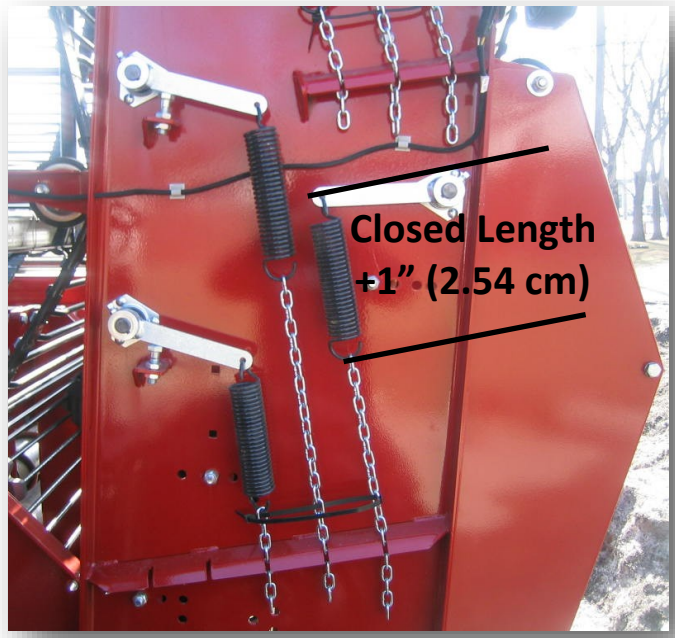

Figure 7-37: Scrub Chain Tension

7.21 Head Shaft Sprocket Dimensions

The distance between head shaft sprockets, idler sprockets, or idler rollers is important. The schematics below show a good starting point for sprocket and roller placement.

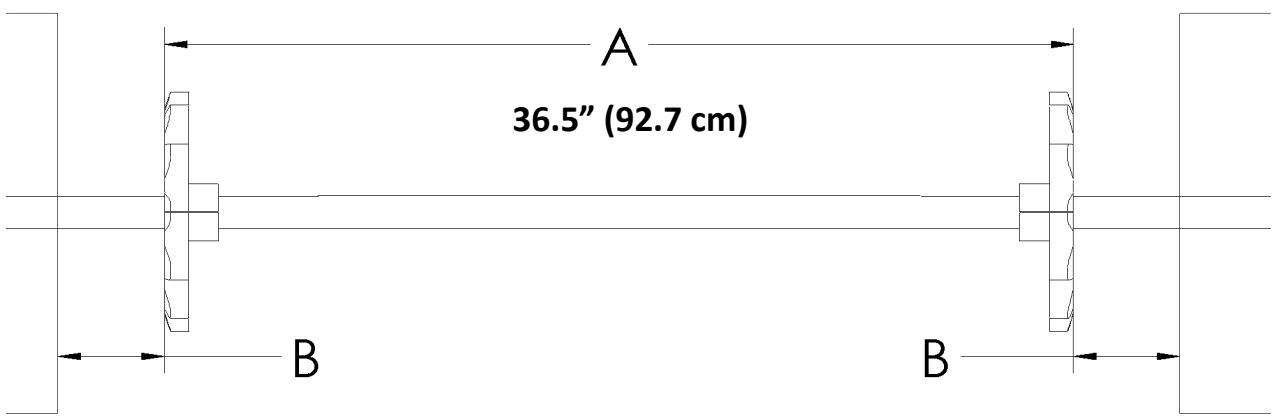

Figure 7-38: Sprocket Placement

IMPORTANT: Dimension (B) is the distance between the face of the sprocket, and the walls of the elevator. This dimension must be equal on both sides of the shaft.

7.22 Elevator

7.22.1 Elevator Chain Speed:

The elevator chain speed must unload the beets at the rate they are entering the tank. Also, the elevator chain speed affects where the beets will land in the truck or cart. This can be adjusted by increasing or decreasing hydraulic flow from the tractor.

7.22.2 Elevator Height:

The elevator must be set high enough above the truck or cart to ensure clearance at all times. Be sure to leave enough room to compensate for when the harvester drives along contours in the field. There are two elevator height adjustment methods:

1. Hydraulic cylinder mounting brackets (A) have two mounting locations. This will alter the maximum and minimum elevator heights.

2. There are multiple locations for pins (B) once the boom is raised, which will determine operating height.

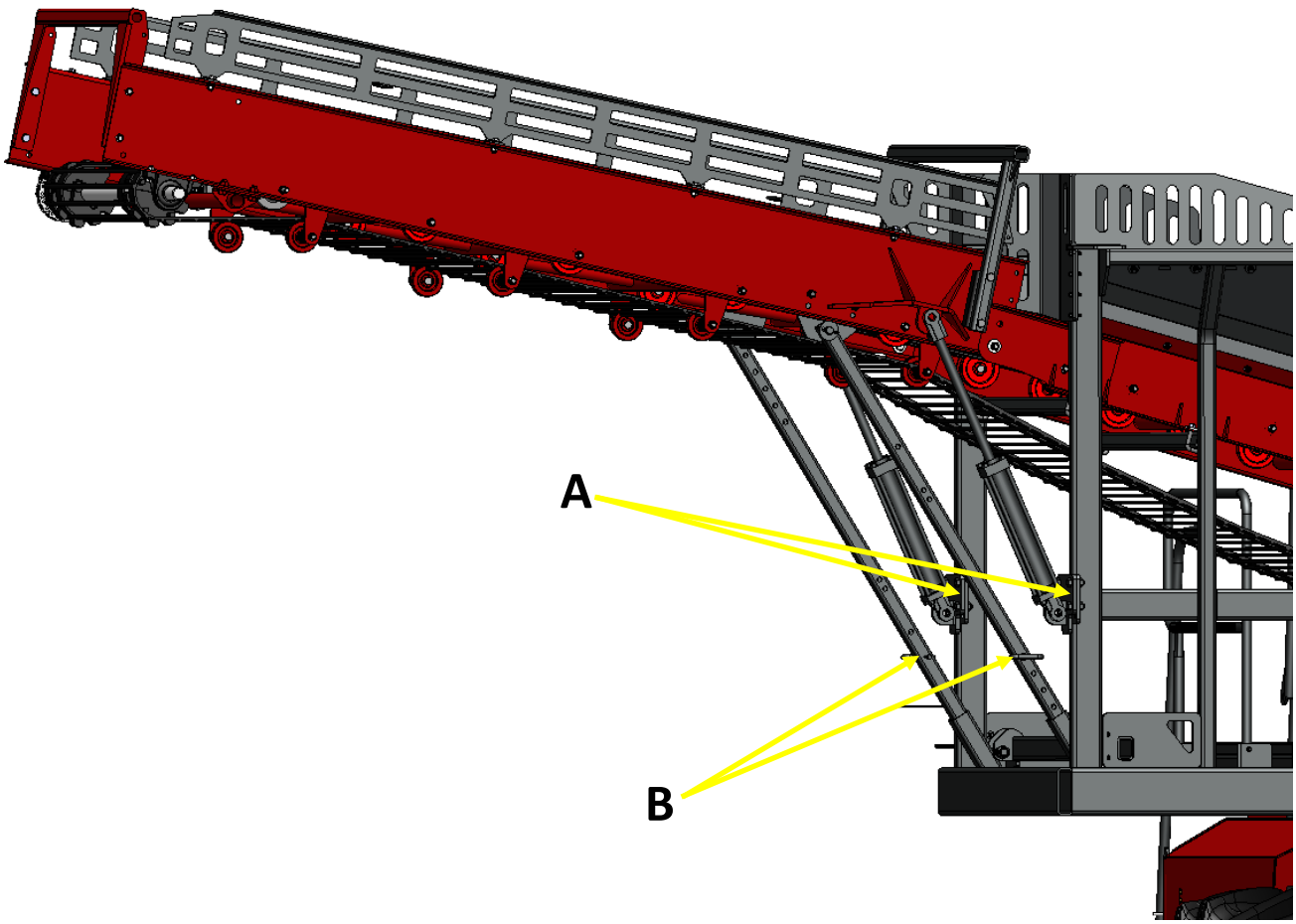

Figure 7-39: Elevator Height Adjustment

7.23 Rear Strut Steering

7.23.1 Dual 11.2 X 24 Tires:

With the 11.2 X 24 steerable rear strut option the left and right struts are tied together with a tie rod. The tires should be set to have 1/2 inch (13mm) of toe in. Using a square off the rear tube of the frame adjust the cylinder mount so that at mid cylinder stroke the front of the tire is 1/2 inch (13mm) closer to the scrub then the back of the tire. Next do the same on the other side using the tie rod turnbuckles to make the adjustment.

Figure 7-40: Dual 11.2 X 24 Tires

7.23.2 Single 710/40R22.5 Tires:

With the 710 steerable rear strut option there is no tie rod between the left and right struts and are controlled with rephasing cylinders. To rephase the cylinders fully turn in either direction and hold flow for a few seconds to purge any air and realign the struts. There is no manual toe in adjustment, it is built into the struts.

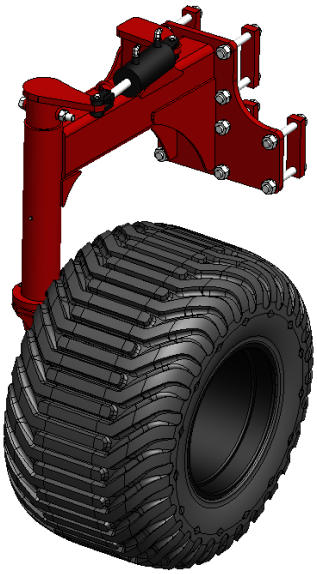

Figure 7-41: Single 710/40R22.5 Tires

7.23.3 Self Centering Steering

Both rear steering options are compatible with John Deere's TouchSet*, which allows for an electronic over hydraulic self centering. This feature will only work with modern John Deere tractors equipped with TouchSet*. Please consult you tractor dealer for information on tractor requirements.

To set up TouchSet*:

1. Make sure the tractor is completely **OFF** before plugging anything in. Plugging or unplugging the harness while the tractor is on will cause a fault code in the tractor and the self-centering steering will not work.
2. Check the connection to the sensor on the harvester axle. Make sure the sensor is approximately halfway in its rotation. The tractor will not register that there is a sensor connected if it is not within its correct range upon start up. The sensor must be between 0.5 and 4.5 volts.
3. Plug the harnesses into the back of the tractor. On 8R series tractors the connector is behind the cover on the back side of the cab. See Figure 7-41—7-43. It is a 10 pin rectangular connector and usually has a white cap for storage.

Figure 7-42:

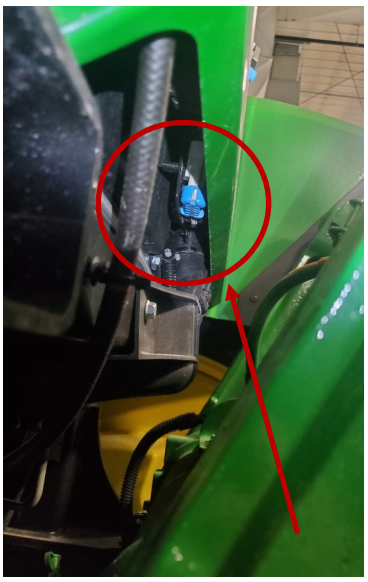

Figure 7-43:

Figure 7-44:

4. Turn on the tractor.
5. Go to the SCV 1 setting page on the monitor.

* TouchSet is a trademark of Deere & Company

4. Make sure “AUTO MODE” is on. See Figure 7-45.
5. Use the hydraulics to manually center the wheels on the harvester. Notice there is a graph on the right side of the screen. A bar should be moving up or down on the graph as the axle is turned. This is the position of the sensor. Note that centered on the graph doesn’t mean the axle is centered. The graph displays the range of the sensor, not the axles. If the sensor is not near its center position when the axles are centered, adjust the turn buckle for the sensor to get it closer to the center to make sure the sensor doesn’t go out of range when turning.
8. Once the axle is centered, press the upper and lower set points on the monitor to set the center for your steering. See Figure 7-46.
9. Steer the harvester in either direction and then push the SCV 1 remote in the opposite direction until the first click and release. The axle should then steer to the center and stop. Repeat in the opposite direction.
10. The self-centering axle is now ready.
11. Make sure to rephase the steering cylinders from time to time by fully turning the axle in either direction and continue to allow oil to flow for a few seconds before releasing the SCV

NOTE! Based on the model and year of the monitor, the follow may look different in your tractor. But the steps should be the same. Consult your dealer with questions.

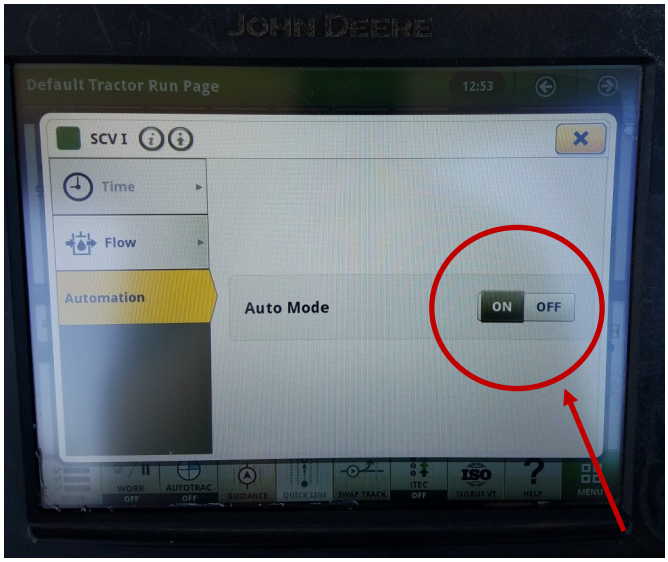

Figure 7-45:

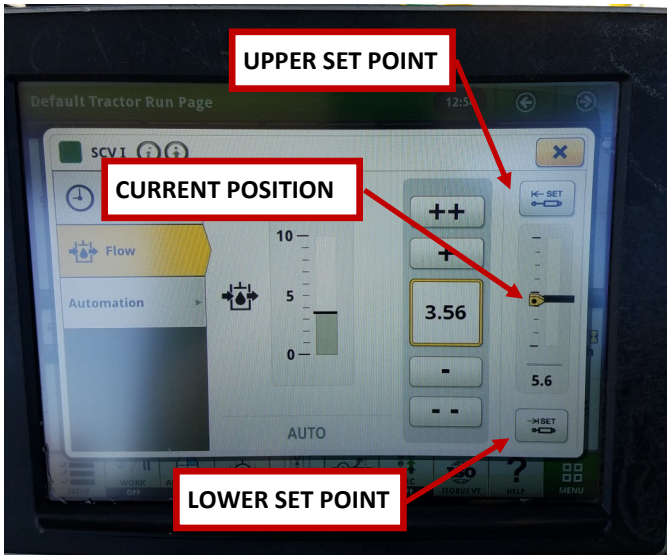

Figure 7-46:

* TouchSet is a trademark of Deere & Company

7.24 ADC Wand Adjustments

The height and width of the ADC wands can be adjusted

To adjust the height loosen bolts, A, and use the adjustment rod and it's nuts, B, to make the adjustment. Both the left and right wands need to be adjusted the same on the machine. From factory the dimension C below is 5.25 inches.

To adjust the width for large beets, the second bolt on wand can be removed and the remaining wand can be slid out into one of the other holes on the pivot shaft. See Figure 7-47.

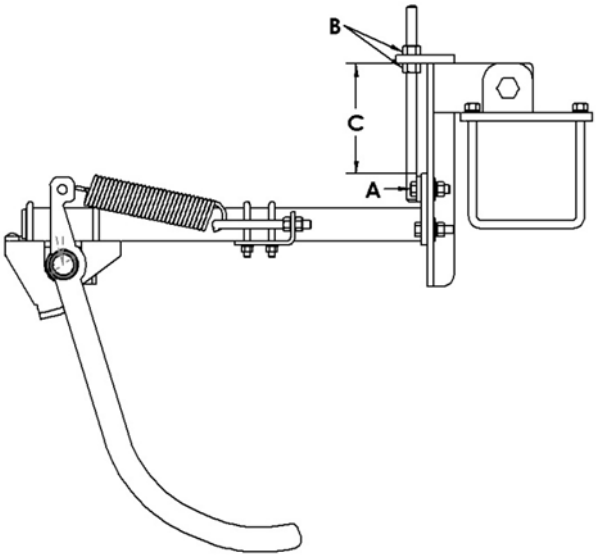

Figure 7-49: ADC Wand Side View

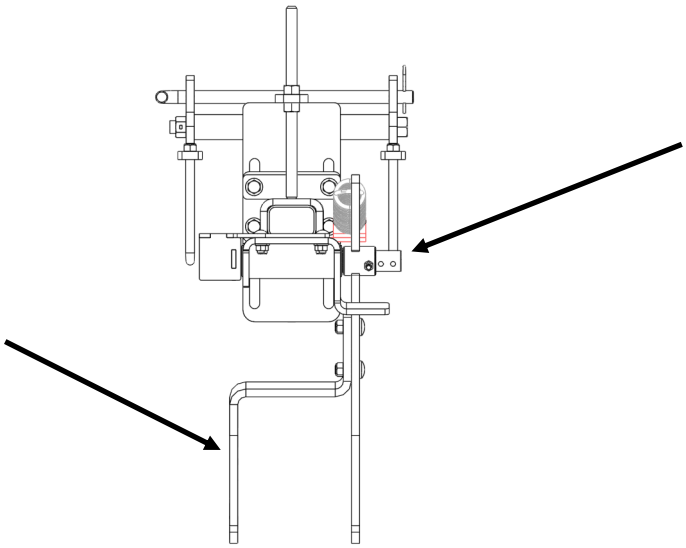

Figure 7-50: ADC Wand Front View

8.0 TRANSPORTATION

8.1 Warning Lights

CAUTION: Prevent collisions between other road users, slow moving tractors with attachments or towed equipment, and self-propelled machines on public roads. Frequently check for traffic from the rear, especially in turns, and use turn signal lights or hand signals.

Use headlights, flashing warning lights, and turn signals day and night. Follow local regulations for equipment and marking. Keep lighting and marking visible and in good working order. Replace or repair lighting and marking that has been damaged or lost.

8.2 Preparing for Transport

1. Run the machine until it is clear of beets and the tank is empty.
2. Clean all soil and debris off the machine.
3. Lower the boom.
4. Raise the machine out of the ground.
5. Make sure all safety decals and lights are clean and visible and all tail lights and turn signals function properly.

Figure 8-1: Lowered Boom

CAUTION: Always use warning lights when transporting. Braking distance is greatly increased when towing a harvester.

NOTE: See section 3.3 for maximum transport speeds.

CAUTION: Be aware of overhead obstructions.

9.0 CLEANING

Cleaning is an important part of harvester maintenance. This section illustrates a few locations where mud will routinely build up and need to be cleaned.

9.1 Row Finder

Row finder wands (A) and springs (B) must be cleaned routinely in order for the row finder to correctly locate beets.

Also, clean the area around the hydraulic valve spool and all other moving components to prevent seal failure.

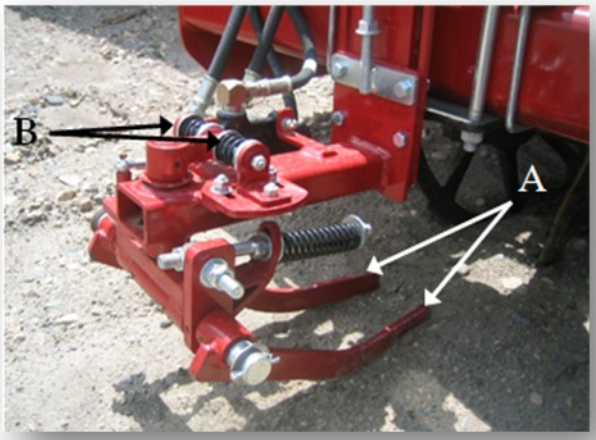

Figure 9-1: Row Finder Cleaning

9.2 Lifter Struts and Paddles

Lifter struts and paddles typically require the most frequent cleanings. Any mud buildup around the lifter struts and paddles must be periodically removed for optimum performance and to prolong machine life.

IMPORTANT: If left unclean, mud buildup in these areas may lead to paddle shaft failure, slip clutch failure, excessive paddle wear, lifter strut seal damage, and/or lifter strut bearing failure.

Figure 9-2: Lifter Strut and Paddle Cleaning

9.3 Grabrolls

Mud buildup on grabrolls can typically be eliminated by proper drive sheave selection. If increasing grabroll RPM does not eliminate mud buildup, clean the grabrolls periodically until conditions improve.

Figure 9-3: Grabroll Cleaning

9.4 Apron Shafts

If mud buildup occurs under or between the apron chains, mud must be removed from the apron shafts.

Figure 9-4: Apron Shaft Cleaning

9.5 Rear Scrub

The interior of the inside chain on the rear scrub may build up with mud balls or beets. This area should be checked frequently and emptied if buildup occurs. The areas around the bogie wheels and frame cross members must also be kept clean. If left unclean, mud balls may cause the belted chain to jump off the sprockets.

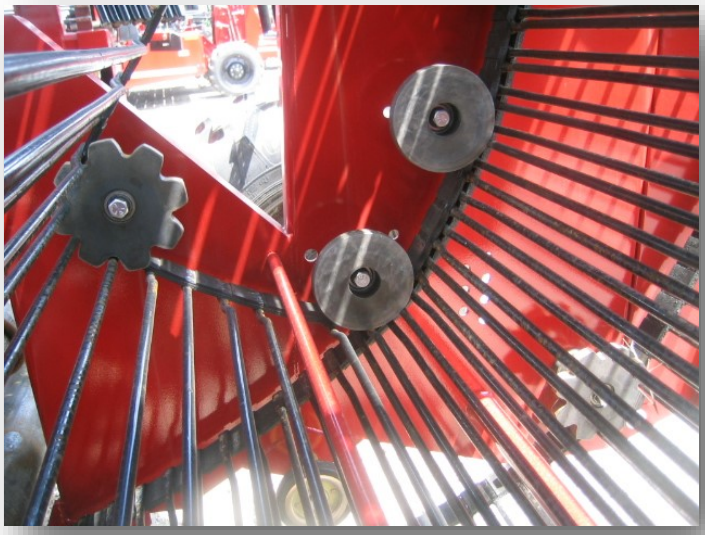

Figure 9-5: Rear Scrub Cleaning

9.6 Beet Tank

The elevator, boom structure, bogie wheels, slides, and frame members should be cleaned frequently to prevent soil buildup.

Excess soil in the beet tank causes undue strain on the elevator's hydraulic motor.

Figure 9-6: Beet Tank Cleaning

10.0 STORAGE

10.1 End of Season

1. Thoroughly clean the harvester inside and out. Debris and dirt will draw moisture and cause rust.
2. Inspect the harvester for any damaged or worn components; repair or replace as needed.
3. Loosen or remove the drive belt. This will prolong the life of the belt.
4. Touch up paint on all parts from which paint has been worn to prevent rusting.
5. Clean all chains by washing with diesel fuel. Dry well and lubricate (see section 11.0, Lubrication and Maintenance).
6. Lower the boom.
7. Move the harvester to a level, dry, and clean area.
8. Put blocking material under the lifter wheels to prevent sinking and under the rear struts to take load off the tires. Do not deflate the tires. If exposed to the elements, put covers over tires to protect them from light, grease, and oil.

10.2 Beginning of Season

1. Attach the harvester to the tractor (see section 5.0).
2. Remove all support blocks from the lifter struts and rear struts.
3. Lubricate the entire machine (see section 11.0, Lubrication and Maintenance). This will force any collected moisture out of the bearings. Replace the gearbox oil and hydraulic oil (see section 11.0, Lubrication and Maintenance).
4. Reinstall the drive belt and verify that all pulleys, idlers, and slip clutches are functioning properly.
5. Run the harvester to ensure proper function.
6. Tighten all loose components, including guards and shields.
7. Review the operator's manual prior to operation.

IMPORTANT: All components that are damaged or worn must be repaired or replaced before operating the harvester. (See parts book for part numbers).

11.0 LUBRICATION AND MAINTENANCE

11.1 General Maintenance Information

Perform each lubrication and service illustrated in this section at the beginning and end of each season.

IMPORTANT: The period for recommended lubrication and maintenance is based on normal conditions. Severe or unusual conditions may require more frequent lubrication or oil changes.

IMPORTANT: The items listed separately from the lubrication chart and the servicing interval pages are of extra importance. These items must be well maintained and checked routinely to maximize their lifespan.

11.1.1 Grease: SAE multipurpose high temperature/extreme pressure grease with less than 1% molybdenum disulfide grease should be used.

Clean grease fittings before using a grease gun. Replace any lost or broken fittings immediately. If a new fitting fails to take grease, remove it and check for failure of adjoining parts.

11.2 U Joints

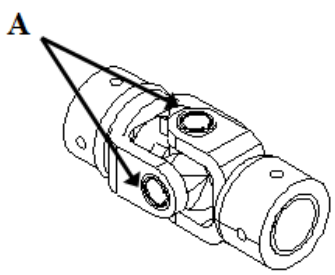

Figure 11-1: Needle Bearings

IMPORTANT: On needle bearings (A), use of grease with more than 1% molybdenum disulfide content may lead to premature U joint failure.

11.3 Hydraulic Oil Tank Level

The hydraulic oil tank should be filled so that 2 inches (5.1 cm) of oil shows above the low level line.

NOTE: Check the oil level every 10 hours. Change oil and filter annually.

OIL SPECIFICATIONS
SAE 10 W [ISO 32]
37 Gallons [140 Liters]

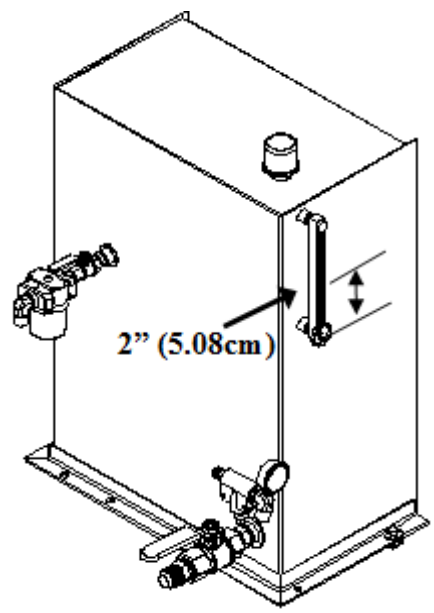

Figure 11-2: Hydraulic Oil Tank Level

11.4 Drive Belt

Check drive belts for wear every 10 hours.

Figure 11-3: Drive Belt

11.5 Lifter Strut Hubs

Lifter strut hubs (A), shown in Figure 11-4, must have the following service every 400 acres (or sooner in severe conditions). Re-pack with grease, check seals, ret-torque spindle nuts, and check for movement in lifter wheel bearing.

11.5.1 Torqueing Spindle Nut:

1. Ensure the seal and bearings are seated properly before tightening the spindle nut.
2. Torque the spindle nut to 200 ft-lb (271.2 N·m) while continuously rotating hub (A). At this point, the hub should be difficult to rotate.
3. Loosen the spindle nut one full turn or until it's loose.

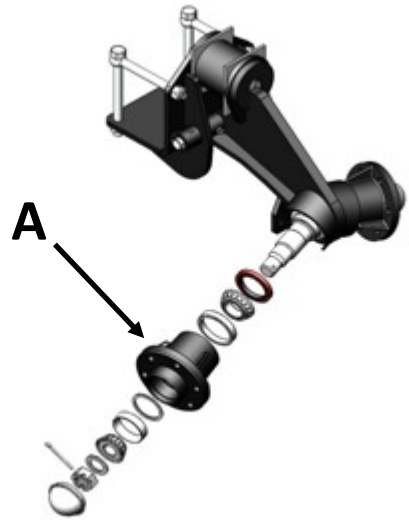

Figure 11-4: Hub

4. Torque the spindle nut to 50 ft-lb (67.8 N·m) while continuously rotating the lifter wheel hub.
5. Back off the spindle nut $^{1}/_{6}$ of a turn or just enough to install the cotter pin in the spindle.

IMPORTANT: Failure to follow proper torque procedure will result in bearing failure.

11.6 Gearbox Oil Level

Gearbox oil levels should be checked routinely and filled to line (A) shown in Figure 11-6.

Side plugs (B) can be found on all gearboxes and can be used to measure the correct fill level.

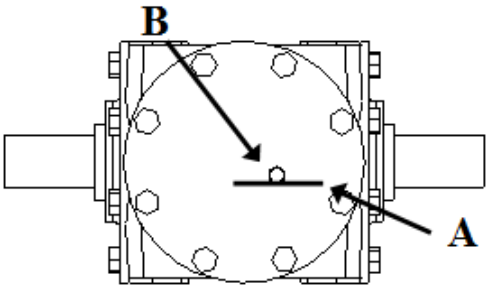

Figure 11-5: Gearbox Breather

When gearboxes are filled with the proper amount of oil, the level should be just below the threads of the side plug (B). Excess oil can be drained from the gearbox using the side plug (B).

11.7 Breather Cleaning

The breather must be able to vent atmospheric conditions during heating and cooling cycles of operation. If it cannot vent, oil will seep out of seals and run low. Prolonged operation with low oil levels will damage the internal components. To clean the breather:

1. Remove breather (A).
2. Stop up the breather opening using a plastic plug or a clean rag to prevent contaminants from entering the gearbox.
3. Soak the breather in solvent for one hour.
4. Use a pointed instrument or wire to remove any residue from breather passages.
5. Blow out the breather with high pressure air.
6. Blow through the breather to ensure the passages are clear.
7. Reinstall and tighten the breather (A) in the gearbox.

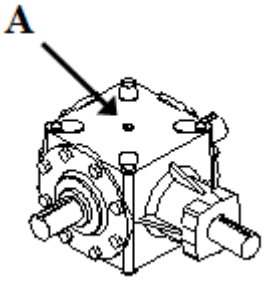

Figure 11-6: Gearbox Oil Level

11.8 Slip Clutch Maintenance

Prior to use each year, slip clutches should be tested to ensure they are functioning properly. To test slip clutches:

1. Loosen the springs by loosening 6 spring bolts (A).
2. Rotate sprocket (B) 1 to 2 revolutions to ensure proper fiber pad slippage.
3. Retighten bolts (A).

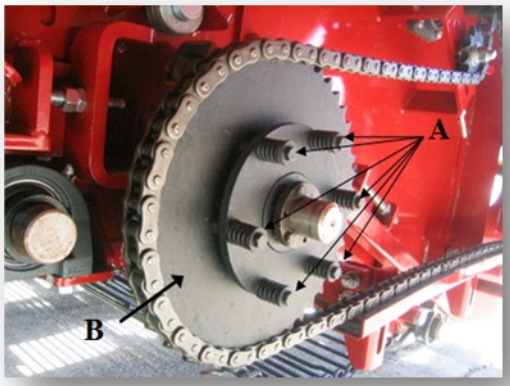

Figure 11-7: Testing Slip Clutch

Fiber pads within the slip clutch must be replaced once excessive slippage occurs.

IMPORTANT: Do not contaminate slip clutches with oil. This may cause slippage and lead to premature fiber disc replacement.

11.9 Hook Rod Chains

Hook rod chains, such as the apron chain, is a high-wear item. Hook rod chains should be replaced when the chain is worn 40% through at the joints.

NOTE: Sprockets should typically be replaced when replacing chain.

NOTE: By the time the apron chain has experienced 40% wear, approximately 10 links will have been removed from each section.

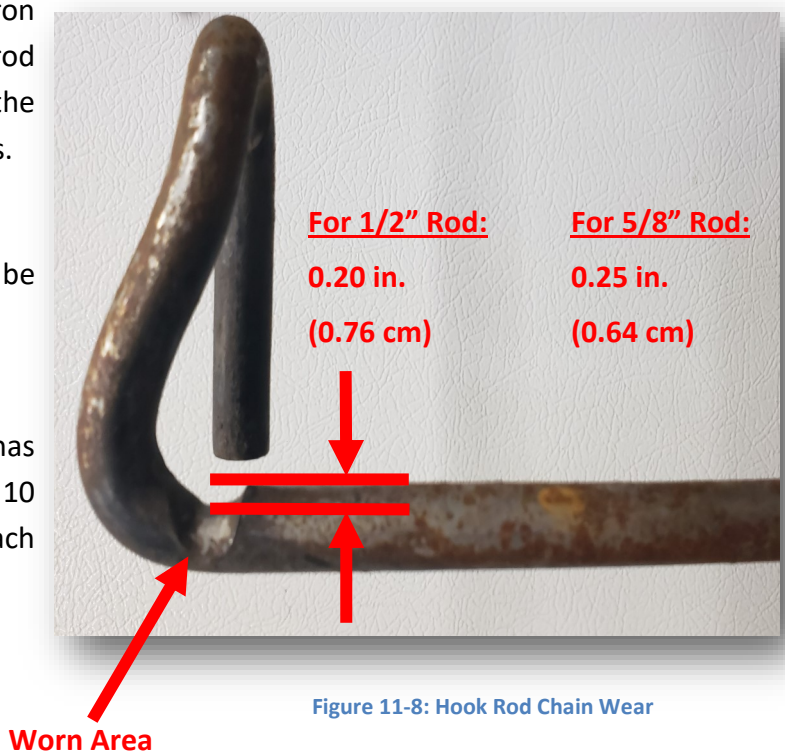

Figure 11-8: Hook Rod Chain Wear

11.10 Servicing Intervals

Before First Use:

1. Grease hitch, drivelines, row finder, U joints, and PTO driveline assembly
2. Check all gearbox oil levels.
3. Do not grease ball bearings.

5 Hours:

1. Grease driveline.

12 Hours:

1. Grease row finder, hitch assembly, lifter strut rod (when equipped with rock struts), belt idler pivot hub, hitch assembly, sealed bearings, and rear strut.
2. Check tightness of the following: lug bolts on rims, lifter strut mounting bolts, hubs on sheaves and sprockets, rear struts mounting bolts, bearing mount on grabrolls, splice bolts on all belted chains, drive sprockets for belted and hook chains.
3. Service apron chain. Check tension, and remove links if necessary.
4. Check belted chain splices.
5. Check for drive belt tension and wear; check idlers for proper tension and alignment. Adjust as required.
6. Check roller chain tension and wear; check sprockets and idlers for proper tension and alignment. Adjust as required.

40 Hours:

1. Check oil level in gearboxes. Fill to proper level. Check more often if leaks are noticed.
2. Check wear on elevator plastic slides, idler wheel bearings, and bogey wheel bearings, and replace as necessary.

250 Hours or Annually:

1. Repack rear strut hubs and lifter wheel hubs.
2. Inspect hydraulic oil and replace filter.
3. Change oil in gearboxes; rinse gearbox when oil is replaced.
4. Clean gearbox breathers.

11.11 Lubrication Chart

Ref #	Description	Lubrication Type	Frequency	Quantity	Number of Instances	
1	Hitch Assembly	Multi-Purpose Grease	10 Hours	1-2 pumps	4	
2	Rowfinder	Multi-Purpose Grease	10 Hours	1-2 pumps	3	
3A	Lifter Strut - Rod	Multi-Purpose Grease	40 Hours	2-3 pumps	2	
	(with rock strut)	Multi-Purpose Grease	10 Hours	2-3 pumps	2	
3B	Lifter Strut- Hub	Multi-Purpose Grease	40 Hours	1-2 pumps	2	
4	Roller Chain	SAE 20 (20 to 40°F)	10 Hours	As Required	2	
		SAE 30 (40 to 100°F)				
5	Sealed Ball Bearings	Multi-Purpose Grease	40 Hours	1-2 pumps	31	
6	Rear Strut	Multi-Purpose Grease	40 Hours	1-2 pumps	2	
7	Gearbox	EP 80W90 Oil	250 Hours/Annually	3 Qt (2.8 L)	2	
8	U-Joint	Multi-Purpose Grease	10 Hours/Daily	2-3 pumps	5	
9	Gearbox-Scrub	EP 80W90 Oil	250 Hours/Annually	1.25 Qt (1.18 L)	2	
10	Driveline	Multi-Purpose Grease	5 Hours	2-3 pumps	6	
11	Hydraulic Tank	ISO 32 Equivalent Hydraulic oil	250 Hours/Annually	37 Gal (140 L)	1	
12	Oil Filter	ZINGA #AE25	250 Hours/Annually	1 filter	1	

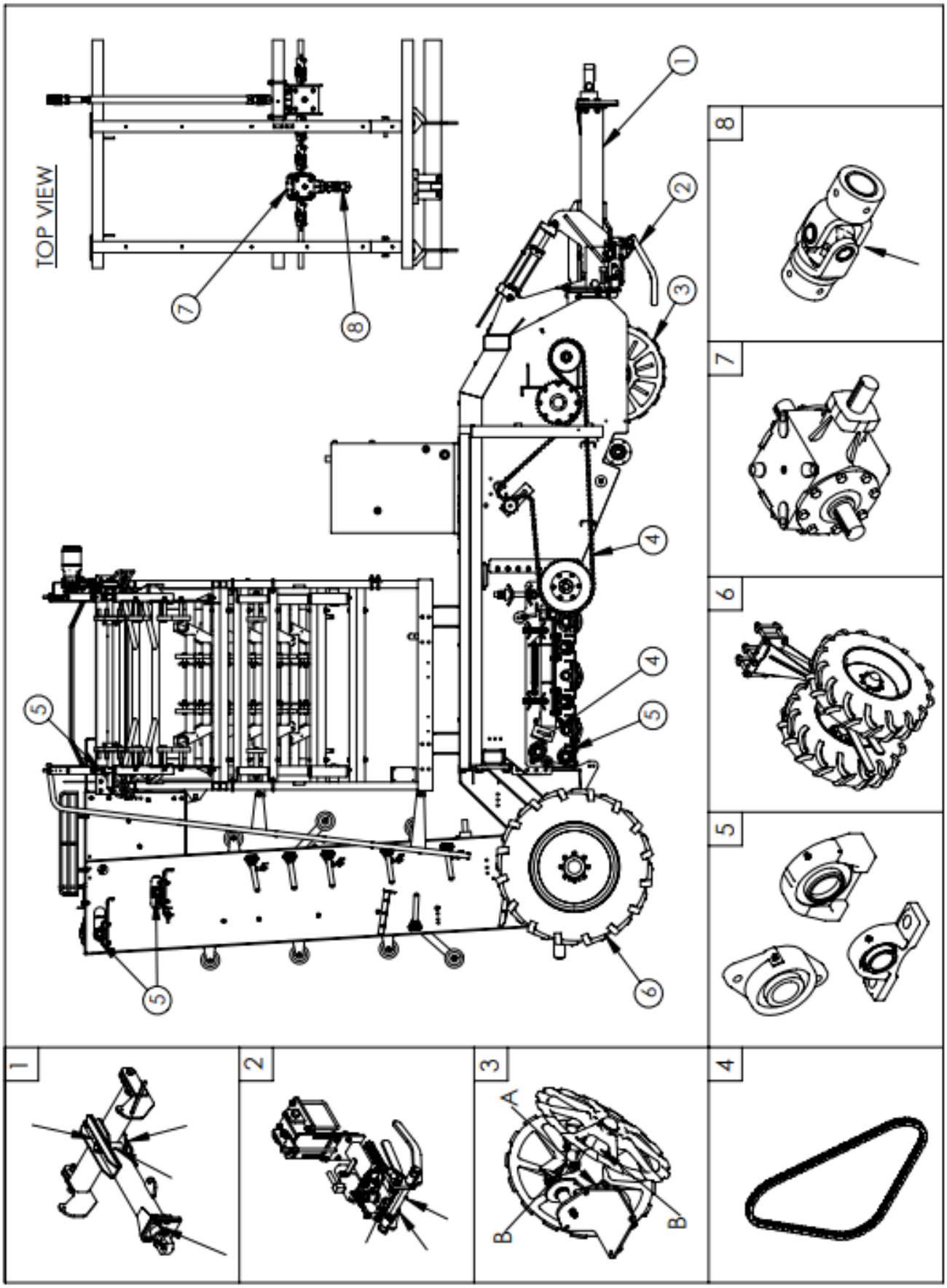
TOP VIEW
1
2
3
4
5
6
7
8
A
B

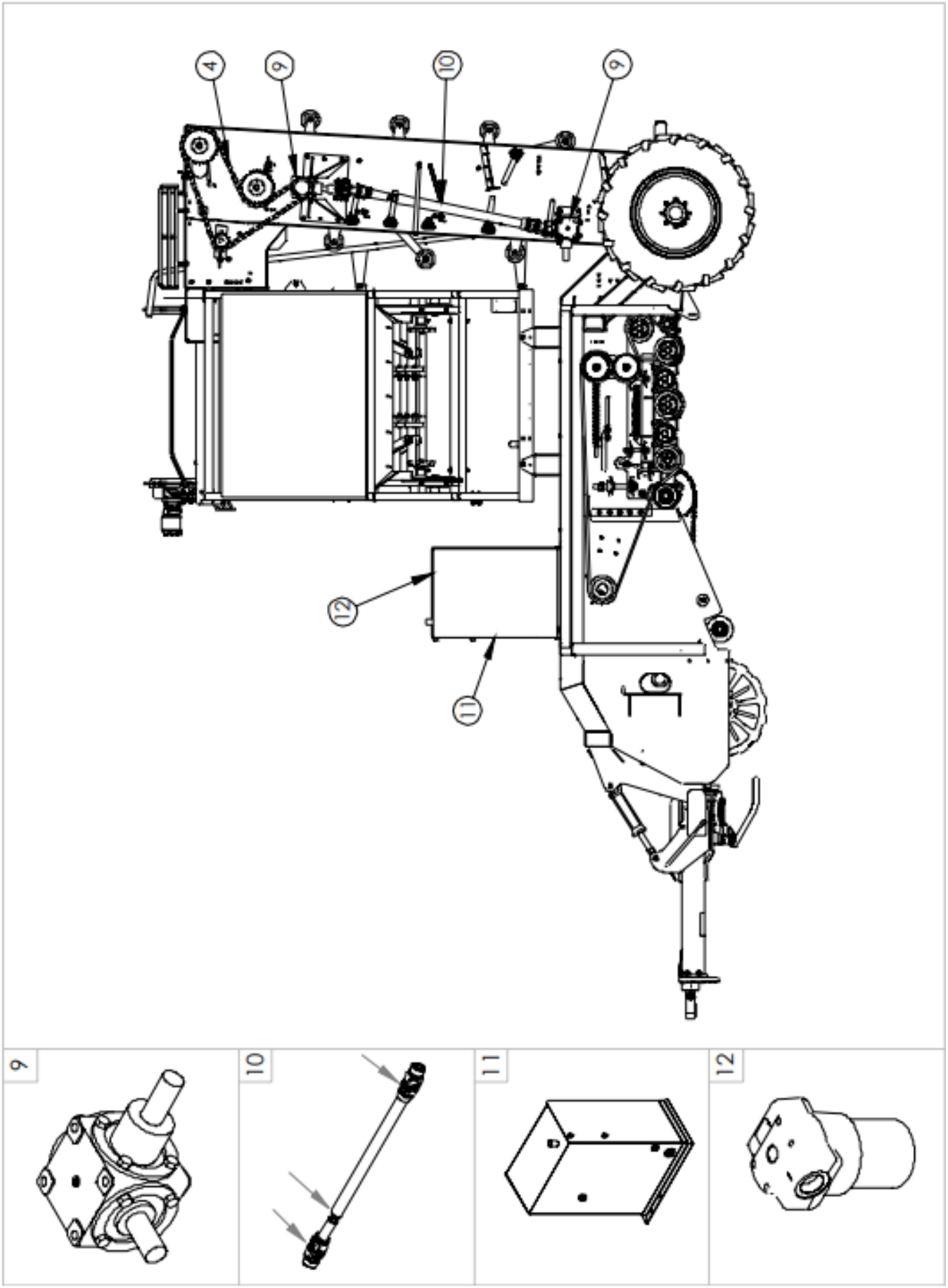
4
9
10
9
12
11
9
10
11
12

11.12 PTO Driveline Servicing

The first lubrication interval should be 16 to 24 hours of operation after initial startup. After that, follow the schedule outlined in Table 11-1.

NOTE: A 1% Molybdenum disulfide grease should be used for the grease points listed below.

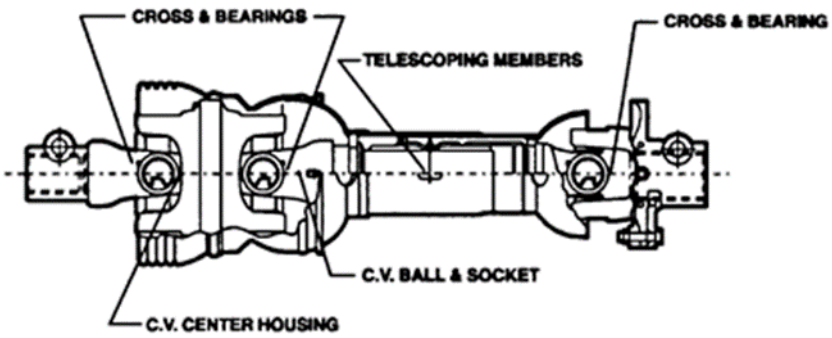

Figure 11-9: PTO Shaft

Table 11-1: PTO Driveline Servicing

Description	Frequency	Quantity	Instances
Cross and bearings*	8 hours	2-3 pumps	3
Telescoping members	8 hours	8-10 pumps	1
CV ball and socket*	8 hours	2 pumps	1
CV center housing*	24 hours	2 pumps	1

*Constant angle applications must have a lube interval of 4 hours.

NOTE: Replacement parts are not lubricated. They must be lubricated at the time of assembly. After that, use the recommended frequency and quantity for each location.

12.0 TROUBLESHOOTING

PROBLEM	***CAUSE***	***SOLUTION***
Lifter wheels slicing beets	Lifter wheels not adjusting to row spacing	Set lifter strut spacing to same as beet row
	Row finder wands clogged, or row finder is not adjusted or working properly	Adjust or clean rowfinder (see section 7.1)
	Machine is not level	Level machine (see section 7.3)
	Irregular planting	Align harvester with rows using manual override
Loss of beets in lifter wheels	Pinch point is too wide	Remove wheel spacers to obtain narrower pinch point (see section 7.5)
	Losing beets between wheel spokes	Install wheel fillers
	Ground speed too slow	For proper speed, see section 6.2
	Tractor operating under 1000 RPM PTO speed	Increase tractor throttle so PTO rotates at 1000 RPM
	Lifter wheels digging too shallow	Lower machine
	Paddle shaft too slow	Increase PTO speed or hydraulic speed.
Loss of beets through grabrolls	Rollers too far apart	Move rollers closer together, or tighten rock spring (see section 7.15)
	Dirt sticking to rollers	Install larger drive sheave to speed up grabrolls (see section 7.14)
	Angle of grabroll bed adjusted incorrectly	Raise front cleaning bed to increase flow of beets through grabrolls (see

PROBLEM	***CAUSE***	***SOLUTION***
Excessive debris/mud being loaded into machine	Poor defoliation job	Run defoliator over field again to eliminate excess debris
		Make sure defoliator is adjusted properly
	Digging too deep	Raise machine to dig shallower
	Unnessary use of wheel fillers	Remove Wheel fillers
	Pinch point is too wide	Adjust pinch point width (see section 7.5)
	Paddle shaft too slow	Increase PTO speed or hydraulic speed
Grabrolls backing up with beets	Bed angle too steep	Adjust grabroll bed angle (see section 7.18)
	Grabrolls moving too slow	Speed up grabrolls by insalling a larger drive sheave (see section 7.14)
	Smooth rolls too low	Raise smooth grabrolls (see section 7.16)
	Front grabroll flap in down position	Move into up position (see section 7.13)
	Traveling too fast while harvesting	Slow down
Beets not coming out of lifter wheels	Paddle shaft not adjusted properly	Lower paddle shaft (see section 7.8)
	Rubber paddles worn severely	Replace rubber paddles
	Beets aren't being lifted to paddles	Increase ground speed (see section 6.2)
	Digging too deep	Raise machine to prevent excessive amounts of material from being loaded

PROBLEM	***CAUSE***	***SOLUTION***
Lifter wheels plugging	Digging too deep	Raise machine
	Paddles not keeping wheel rim clean	Adjust the paddles outward and/or down (see section 7.9)
	Scrapers not close enough to wheel	Adjust scrapers with adjusting bolts (see section 7.7)
	Rocks clutching or stopping lifter wheel rotation	Change position of pinch point (see section 7.4)
	Excessive mud	Clean machine
Beets falling out of the front of the machine	Paddles too wide	Adjust inward (see section 7.9)
	paddles not reaching deep enough into lifter wheels	Lower paddle shaft (see section 7.8)
	Apron chain tension too loose	Adjust chain tension (see section 7.10)
Excessive soil being loaded into machine	Digging too deep	Raise machine
	Ground speed too fast	Reduce ground speed
	Incorrect pinch point position	Roll pinch point forward (see section 7.4)
	Wheel fillers are installed	Remove wheel fillers (see section 7.6)
	Pinch point is too wide	Remove lifter wheels spacers (see section 7.4)
Soil buildup on grabrolls	Loading excessive soil	Refer to problem listed above
	Grabrolls moving too slow	Speed up cleaning rolls with larger drive sheave (see section 7.14)
	Soil conditions (clay, mud, temperature)	Clean more frequently

PROBLEM	***CAUSE***	***SOLUTION***
Tires built up with soil	Soil conditions	Clean rear struts frequently (see section 9) Lower tire pressure (see section 3.3)
Scrapers building up with mud	Scrapers too far from lifter wheels Soil conditions	Adjust outward to wheels (see section 7.7) Move paddles out close to lifter wheels (see section 7.9)
Mud building up on lifter wheels.	Paddles not close enough to lifter wheels Digging too deep Soil Condidions Scrappers adjusted incorrectly	Move paddles out closer to lifter wheels (see section 7.9) Raise machine Clean lifter struts frequesntly (see section 9.0) Adjust toward lifter wheels (see section 7.7)
Breaking beets	Digging too shallow Small beets or dry conditions Grabrolls moving too fast Pinch point too marrow Tractor tires running over beets Grabrolls opened too far	Lower machine Install reverse #4 grabroll kit Install smaller drive sheave (see section 7.14) Add wheel spacers (see section 7.4). Adjust tractor tires properly (see section 4.1.2) Close up grabrolls (see section 7.12 for front and 7.17 for back)

13.0 Active Depth Control (ADC)

13.1 ISOBUS ADC Operation Introduction

Active Depth Control (ADC) is an electric over hydraulic control system that levels and maintains the harvester at a constant digging depth while harvesting based on a variety of field conditions. Using hydraulic oil supplied from the tractor, a valve bank on the harvester sends oil to the hydraulic cylinder on the hitch and rear axle to raise and lower the harvester to allow it follow the ground evenly. To determine what should be considered level with the ground, the harvester has two mechanical wands at the front of the machine that ride on the ground. Using sensors, on these wands, the electronic control unit (ECU) controls the valve bank to level the harvester.

This system is an ISOBUS platform. ISOBUS is an international communication protocol that standardizes communications between tractors and implements. To control this system, the operator will interface with it using any tractor's ISOBUS compatible virtual terminal (VT).

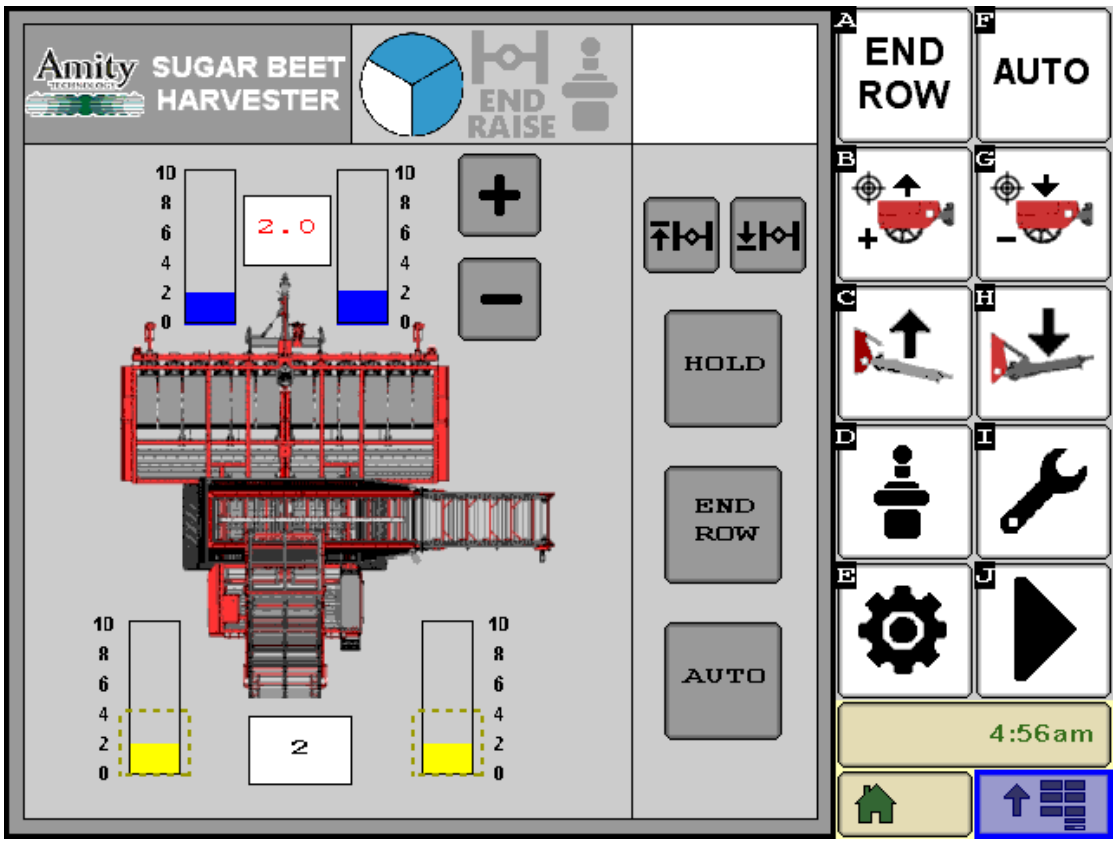

13.1.1 Terminology

For clarification purposes, the following are some terminology descriptions that are used in this manual.

- ***Select/Selecting:*** There are many different VTs in the industry that come with different ways of performing actions. Most new VTs are touch screen, so "selecting" on a touch screen simply means to touch. Some VTs have physical buttons that correspond to things on the screen. "Selecting" would be pushing those physical buttons. Other VTs have a scrolling knob that allows the user to turn the knob to highlight icons on the screen that can then be selected by a physical button or by pressing on the knob.

- ***Virtual Terminal:*** The virtual terminal or VT is the physical screen that the user will interface with.

- ***Softkeys:*** Softkeys are a set of icons that are used to perform actions on the VT. These icons are usually off to one side of the screen and come in a list form. Different VTs will display a different number of softkeys at one time, and almost all will require the user to page through to access all available icons.

- ***Page:*** A page is the larger portion of the screen that displays the information about the system. Different pages will display different information and have different options for the user. Figure 13-1 shows an example of the screen. Note: your screen may different in appearance.

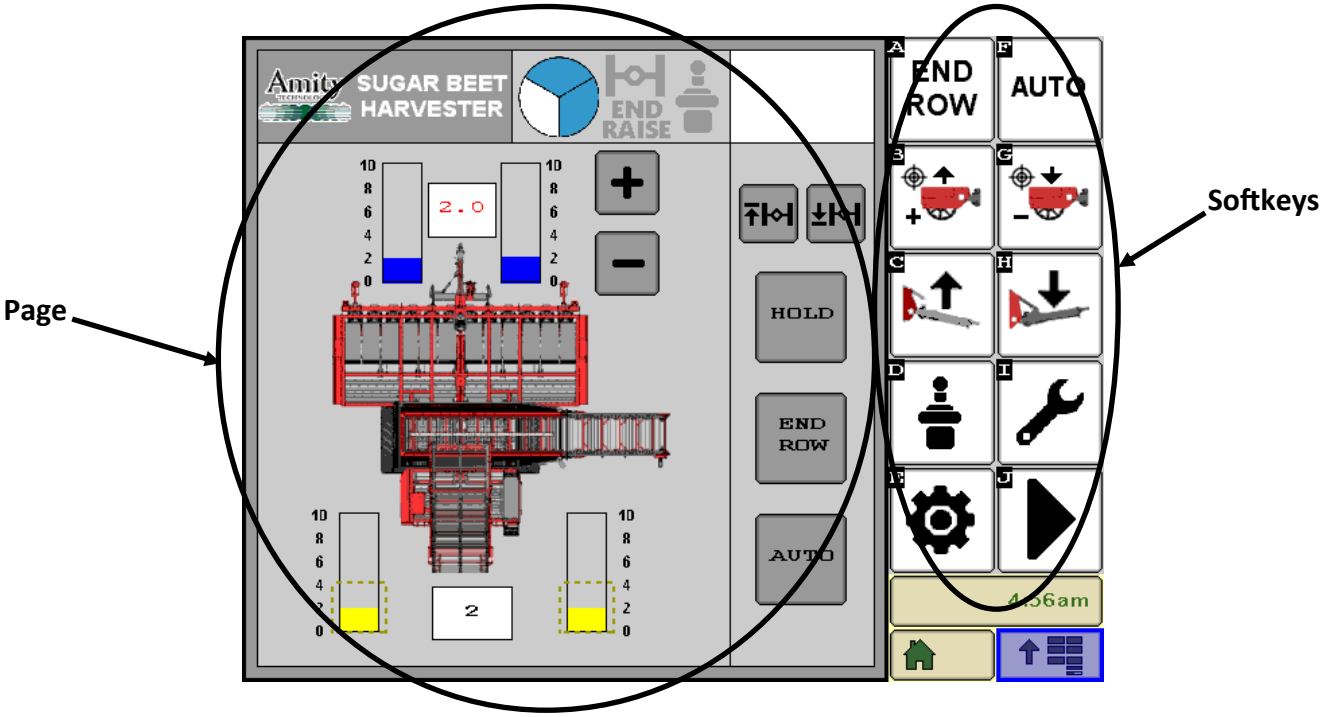

Figure 13-1: VT Screen Shot of ADC on ISOBUS

13.2 Safety

As the operator, you are responsible for the safe operation and maintenance of the Active Depth Control on your Amity sugar beet harvester. You and anyone else who will operate, maintain, or work around the harvester while it is in use should be familiar with the operation, maintenance, and safety information in this manual.

The most important element of safety for this equipment is a safe operator. Any person who has not read and understood all the operation and safety instruction of not only the ADC system, but also the entire harvester, is not qualified to operate this system.

NOTE: It is very important to understand that as an automated system, the system will move the harvester without direct input from the operator. Anytime there is hydraulic oil supplied to the harvester ADC's valve bank, the harvester has the potential to move.

For the safe operation and maintenance of the ADC system, follow these rules:

1. Read and understand this operator manual on how the system works, and what all the controls are and do.
2. Only supply hydraulic oil to the ADC valve when you are ready and intend to use the system. Make sure all people and objects are outside the danger zone of the harvester before supplying oil. Shut off the oil supply anytime the system will not be in use.
3. Note that anytime oil is supplied to the valve, any control used on the VT creates potential for the harvester to move.
4. Be on high alert whenever the system is in "Auto" mode. The harvester will automatically move based on feedback from the depth wands, even without action from the operator.
5. Deactivate the joystick anytime it is not in use to prevent any chance of unintentional operation by accidentally bumping it.
6. Before ever exiting the tractor, turn off the PTO, stop the flow of hydraulic oil to the harvester, and turn off the tractor.
7. Follow all other safety instructions noted in the harvester's operator manual.
8. "Auto" state cannot be activated without the PTO running, but all other functions will work.

13.3 Softkey Definition

Below are short definitions of all the different softkeys.

Auto Toggle:

Enters and exits the system's Auto state

End Row:

Enters the system's End Row state

Raise Digging Depth:

Raises the digging depth target by increments of 0.2"

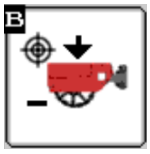

Lower Digging Depth:

Lowers the digging depth target by increments of 0.2"

Rear Axle Max Height:

Raises the rear axle all the way up.

Rear Axle Min Height:

Lowers the rear axle all the way down.

Rear Axle Target Toggle:

Cycles through the rear axle target heights

Raise Hitch:

Incrementally raises the front of the harvester using the hitch

Lower Hitch:

Incrementally lowers the front of the harvester using the hitch

Wand Calibration:

Calibrates the wands

Settings Page:

Opens the setting page

Diagnostic Page:

Opens a diagnostic page

End Raise Toggle:

Turns on and off the rear axle end row raise feature

Active Alarm Page:

Opens a screen that will display all active alarms

Joystick Toggle:

Activates and deactivates the use of the joystick

Home Page:

Opens the main page

Softkey Pager:

Shows more softkeys

Sound Toggle (On):

Toggles the sound on and off.

Wand Calibration Success:

This icon will show momentarily after successful wand calibration

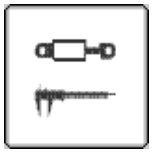

Cylinder Calibration:

Opens the cylinder calibration page

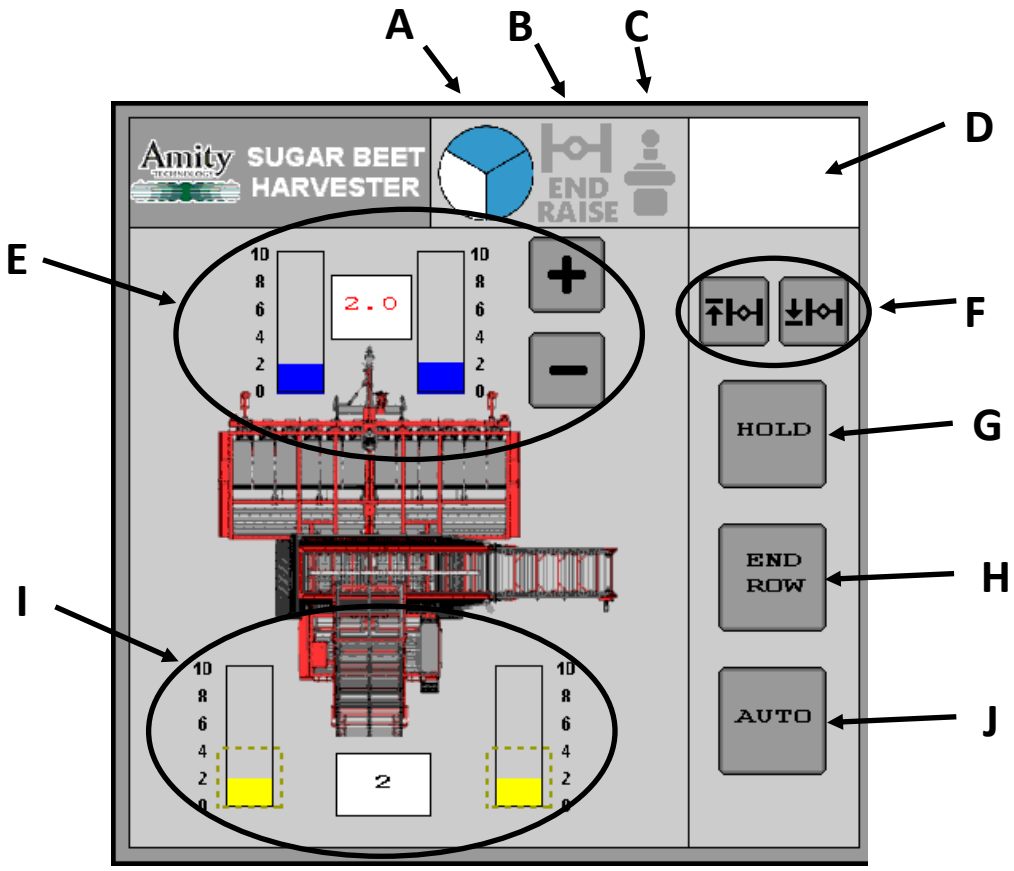

Figure 13-2: Main Page

13.4 Main Page

Figure 13-2 shows the main page of the ADC system. This will be the page that will display all the necessary information while harvesting. The following are short descriptions of what each part of the page means or represents.

A - System Readiness Chart:

The system readiness chart is a pie chart that is made up of three section that represent criteria that must be met before the system can enter into Auto state. Below are the descriptions of each section of the pie.

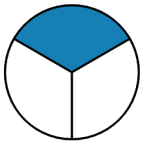

System Calibrated:

The top slice of the pie will be filled in if the wands have been calibrated.

System Error/Alarm Status:

The right slice of the pie will be filled in there are no active alarms.

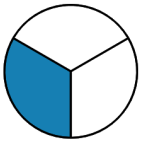

PTO Status:

The left slice of the pie will be filled in if the PTO is running.

System Ready:

Once all segments of the pie chart are filled in, the pie chart will change to a green circle with a check. This check means that all the requirements for entering into Auto state have been met.

B - End Raise Active/Inactive Icon:

The End Raise function is where the rear axle will raise all the way up when End Row state is entered. This function can be toggled on and off using a softkey (Figure 13-3). This End Raise icon that will change colors depending on whether if the function is activated. The icon will be gray if the function is not active (Figure 13-4). The icon will be green if the function is active (Figure 13-5).

Figure 13-3: Toggle On/Off Softkey

Figure 13-4: Function Inactive Icon

Figure 13-5: Function Active Icon

C - Joystick Active/Inactive Icon:

In order for the joystick to be used, it must first be activated. To activate the joystick, there is a softkey to toggle it on and off (Figure 13-6) or you can select the icon directly. This joystick icon that will change colors depending on if it is active. The icon will be gray if the joystick in not active (Figure 13-7). The icon will be green if the joystick is active (Figure 13-8).

Figure 13-6: Toggle On/Off Softkey

Figure 13-7: Joystick Inactive Icon

Figure 13-8: Joystick Active Icon

D - System States:

In the upper right corner of the main page, there is a current state/mode box that displays what the system is currently trying to do. Below is a description of the possible states.

Manual/"Blank":

Manual or "Blank" state is the natural state of the system. The system will not perform any action until input is received from the user.

Auto:

Auto is the state of automatic adjustments to the hitch and rear axle cylinders to both level the machine side to side and maintain a set depth of the lifter wheels in the ground.

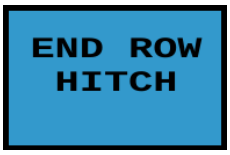

End Row Hitch:

End Row Hitch is the timed state of raising the hitch to pull the lifter wheels out of the ground. The speed of this raise can be adjusted on the setting page (End Row Sensitivity).

End Row Hitch & Axle:

End Row Hitch & Axle is the timed state of raising the hitch to pull the lifter wheels out of the ground and fully raising the rear axle. The speed of hitch's raise can be adjusted on the setting page, "End Row Sensitivity". First the hitch will raise and then the rear axle will raise.

Hold:

While in Hold state the harvester will hold it's current position and not make any automatic adjustments. This can only be entered in from an Auto state.

Axle Override Max:

Axle Override Max raises the rear axle all the way.

Axle Override Min:

Axle Override Min lowers the rear axle all the way.

E - Target Depth and Wand Position Graph:

The Target Depth is the depth that the system actively tries to make the lifter wheels dig into the ground. This number is displayed on the main screen between the two blue wand position bar graphs. It is important to note that this number does not represent the exact number of inches the lifter wheels are digging into the ground. While physically adjusting the height of the wands on the machine can make this number very close to that of the inches into the ground, this number is meant to just be a scaled reference number. Upon initial use, and periodically throughout harvest, the actual depth of the lifter wheels should be looked at in a dug row to verify a satisfactory depth.

The target depth can be changed in a few different ways. It can be changed by selecting the plus and minus icons to the right of the bar graphs. This will change the depth in increments of 0.2 inches. In certain configurations of the joystick, the joystick can be used to change the depth. See joystick section for more information. Again, this will change the depth in increments of 0.2 inches. There are also two softkeys that will raise and lower the depth in increments of 0.2 inches (Figure 13-10 and 13-11). The last way to change the target depth is by directly selecting the target depth number, which will cause a pop-up keypad to appear and a number can be manually entered in (Figure 13-12).

On either side of the target depth number is a bar graph that shows the instantaneous reading from the wands on the front of the machine. While harvesting, these bars will move up and down with the wands as they travel over the ground. While there will be lots of movement and spikes, you want to see that the bars are close to your target depth, which shows that the system is working correctly and always working to achieve that target depth.

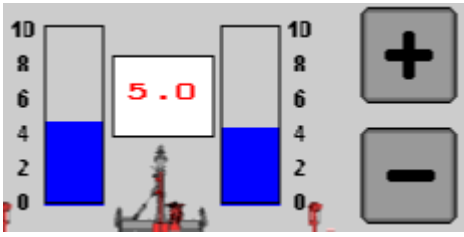

Figure 13-9: Target Depth & Wand Position

Figure 13-10: Raise Target Depth

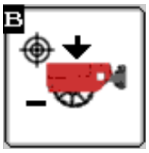

Figure 13-11: Lower Target Depth

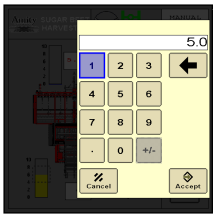

Figure 13-12: Pop Up Key Pad

F - Rear Axle Max and Min:

The rear axle can be manually raised all the way up or lowered all the way down if desired. There are two icons (Figure 13-13) on the main page that can be used to achieve this, along with two soft keys (Figures 13-14 & 13-15). By selecting the max height icon or softkey, the rear axle cylinders will extend to the max stroke of 10 inches. By selecting the min height icon, the rear axle cylinders will retract all the way.

Figure 13-13: Max and Min Icons

Figure 13-14: Min Axle Softkey

Figure 13-15: Max Axle Softkey

G - Hold:

While in Auto state if you want to pause the automatic adjustments you can enter a Hold state. All moments will stop until given another command. To enter Hold state there is an icon (Figure 13-16) on the main page. This is an On/Off toggle switch. Pressing it once will enter Hold and pressing again will enter back into Auto. You can also enter Hold using the joystick. With the “Raise” and “Lower” options selected for the joystick. The system will enter Hold after raising or lower the hitch slightly based on which way the joystick was pushed.

Figure 13-16: Hold Icon

H - End Row:

To lift the lifter wheels up out of the ground use End Row by pressing the icon (Figure 13-17) or the softkey (Figure 13-18). This is a timed state of raising the hitch cylinders. The speed of the raise can be adjusted with the “End Row Sensitivity” setting on the settings page. The rear axle can also be raised if they “Auto Axle” is turned on. An End Row can be activated with the icon on the main page, a softkey, or the joystick.

Figure 13-17: End Row Icon

Figure 13-18: End Row Softkey

I - Axle Setpoint and Position:

The Axle Setpoint is the rear axle cylinder height that the system will target when in Auto state. This number represents the average stroke length of the left and right axle cylinders. When Auto state is entered, the axle cylinders will move to meet the selected set point. To level the harvester, the cylinders will move up and down while maintaining an average stroke distance of the setpoint. This means that if a difference of 2 inches is needed between the two cylinders to make the machine level, one cylinder will move up 1 inch from the setpoint and the other will move down 1 inch from the setpoint.

There are four different setpoints that can be selected: 2 inches, 4 inches, 6 inches, and 8 inches. The setpoint can be changed by selecting the setpoint softkey, which will cause a pop-up list to appear from which the setpoint can be selected (Figure 13-21). There is also a softkey that when pressed will cycle through the four setpoints (Figure 13-20). The typical setting will be 2 inches for most harvesting. Selecting a higher number will increase the angle the beets are required to climb across the grabrolls and jump chain, which increases the amount of cleaning time for the beets.

To either side of the setpoint number on the main page is a bar graph that shows the current location of the cylinders within their stroke. Depending on the axle, due to physical limitations in the axle, there can only ever be a maximum of a 4 inch difference in the cylinder strokes. On each bar graph is a dashed box that represents the limit of movement each cylinder will be able to move based on the current setpoint.

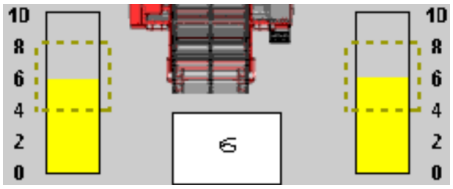

Figure 13-19: Setpoint & Cylinder Graph

Figure 13-20: Setpoint Cycle Softkey

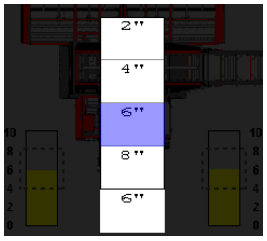

Figure 13-21: Setpoint Pop Up List

J - Auto Mode Icon:

Once all the requirements to enter Auto state have been met, (see section 13.4, part A) there are a few different ways to enter Auto state. On the main page in the bottom right there is an "AUTO" icon that can be selected. There is also a softkey. The final way is to use the joystick, (see joystick section). All these options operate in an on/off capacity. One press will enter the system into Auto state and the next will exit the system out of Auto state.

Figure 13-22: Auto Toggle Icon

Figure 13-23: Auto Toggle Soft Key

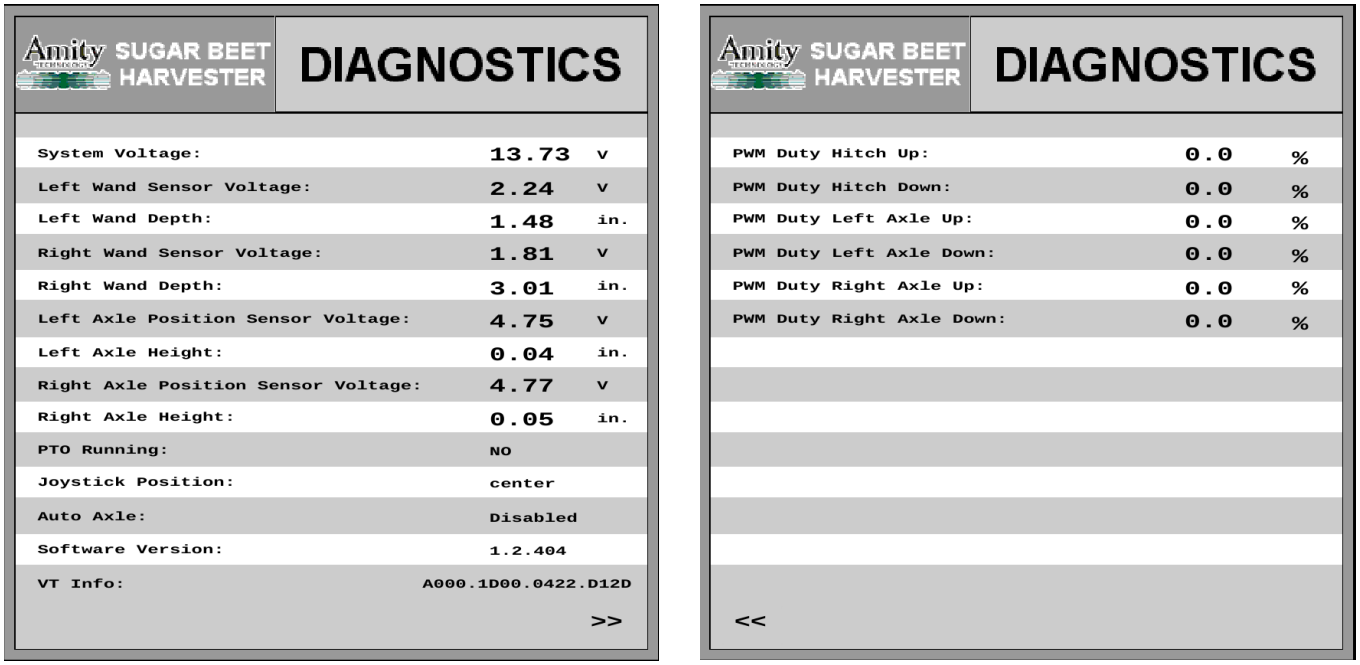

Figure 13-24: Diagnostics Pages 1 and 2

13.5 Diagnostics Pages

Figure 13-24 shows the diagnostic pages, which is a helpful tool for troubleshooting. This screen shows you live data from the ECU that can be used to determine if or where an issue might be. The following are descriptions of each of the items displayed.

Page 1:

- ***System Voltage:*** The system voltage is the voltage being received from the tractor. It should be between 12 and 14 volts.

- ***Wand Depth:*** The wand depth is the depth that the system thinks the machine is currently at based on the wand position. When the machine is up in the air and the wands are not touching the ground, these readings should be 0.00. If not the system needs to be calibrated, see section 13.9.

- ***Wand Sensor Voltage:*** The wand voltage is the reading from sensors on the wands on the front of the machine. The voltage should be between 0.3 and 4.5 volts. As the wand is moved up and down, the voltage should move between this range accordingly.

- ***Axle Position Sensor Voltage:*** The axle voltage is the reading from the rear axle cylinder sensors. The voltage should be between 0.2 and 4.8 volts. As the cylinders move up and down, the voltage should move between this range accordingly.

- ***Axle Height:*** The axle height is the current stroke distance of the rear axle cylinders. The reading should be between 0 and 10 inches and should match the physical cylinder stroke distances. If not the system needs to be calibrated, see section 13.7.

- ***PTO Running:*** The PTO running is a simple “YES” or “NO” if the PTO is running. This is determined by a sensor at the front of the machine, just after the PTO shaft.

- ***Joystick Position:*** The joystick position is the current position of the joystick. This will display "CENTER," "NORTH," "EAST," "SOUTH," and "WEST" based upon which position the joystick is in. "Center" is the natural position of the joystick (vertical). "North" is shown as an arrow on the physical joystick.

- ***Auto Axle:*** Auto axle displays "ENABLED" or "DISABLED" based on if the END RAISE function is toggled on or off.

- ***Software Version:*** The software version is the current software version loaded onto the ECU.

- ***VT Info:*** VT Info displays info about the physical screen's hardware and software for troubleshooting and informational purposes.

Page 2:

- ***PWM Duty Hitch Up:*** This is percentage of power being sent to the hydraulic valve to extend the hitch cylinders.

- ***PWM Duty Hitch Down:*** This is percentage of power being sent to the hydraulic valve to retract the hitch cylinders.

- ***PWM Duty Left Axle Up:*** This is percentage of power being sent to the hydraulic valve to extend the left axle cylinders.

- ***PWM Duty Left Axle Down:*** This is percentage of power being sent to the hydraulic valve to retract the left axle cylinders.

- ***PWM Duty Right Axle Up:*** This is percentage of power being sent to the hydraulic valve to extend the right axle cylinders.

- ***PWM Duty Right Axle Down:*** This is percentage of power being sent to the hydraulic valve to retract the right axle cylinders.

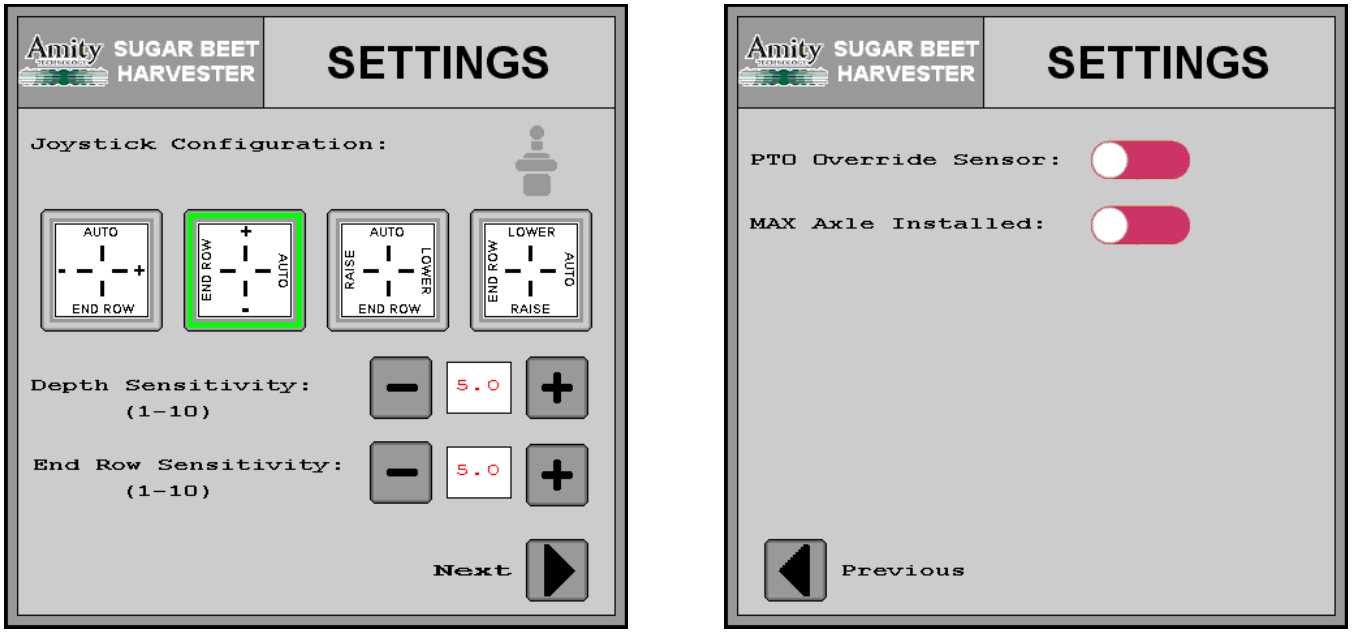

Figure 13-25: Settings Pages, 1 and 2

13.6 Settings Pages

Figure 13-25 shows the two settings pages. Descriptions of each setting are as follows.

Page 1:

- Joystick Configuration: The joystick has four different layout options. The joystick can perform four different functions by pushing it North, East, South, or West. North is designated by an arrow on the physical joystick and is considered the top function on this screen. To select a configuration, press one of the options shown on the screen. The configuration will be outlined in green once selected to show which option is currently being used. The possible functions that the joystick can perform are as follows:

1. ***"AUTO":*** Toggles in and out of Auto state.
2. ***"END ROW":*** Enters the system into End Row state.
3. ***"+":*** Increase the target depth of the harvester. Increases the depth in increments of 0.2 inches.
4. ***"-":*** Decreases the target depth of the harvester. Decreases the depth in increments of 0.2 inches.

5. "LOWER": Lowers the front of the harvester using the hitch cylinders. The front will be incrementally lower with each movement of the joystick. The increment size is PTO dependent. With the PTO running the movement will be small, and with the PTO not running the movement will be greater. Using the "LOWER" or "RAISE" function will cause the system to exit out of Auto state and enter Hold state.

6. ***"RAISE":*** Raises the front of the harvester using the hitch cylinder. The front will be incrementally raised with each movement of the joystick. The increment size is PTO dependent. With the PTO running the movement will be small and with the PTO not running the movement will be greater. Using the "LOWER" or "RAISE" function will cause the system to exit out of Auto state and enter Hold state.

Figure 13-26: Joystick Toggle Softkey

Figure 13-27: Joystick Inactive Icon

Figure 13-28: Joystick active Icon

In order for the joystick to be used, it must be activated first. To active the joystick, there is a softkey to toggle between activating and deactivating the joystick (Figure 13-26). The icon on the main page can also be touched to toggle it on and off. When the joystick is active, the icon on the screen will be colored green (Figure 13-28). When the joystick is inactive, the icon will be gray (Figure 13-27). Changing the configuration will cause the joystick to become inactive until reactivated.

-Depth Sensitivity: The depth sensitivity controls the responsiveness of the machine when in Auto state. The higher the number, the faster the system will react to the wand readings. The sensitivity can be set in the range from 1-10 in increments of 0.5. To change the value, use the plus and minus icons on the sides of the current setting. By directly selecting the setting number, a pop-up keypad will appear and a number can be typed in manually.

Note: Oil temperature will affect the responsiveness of the system. It is recommend that the system only be used once the tractor and its oil has warmed up to normal operating temperature to reduce any fluctuation of the system's sensitivity.

Figure 13-29: Sensitivity Setting and Adjustment

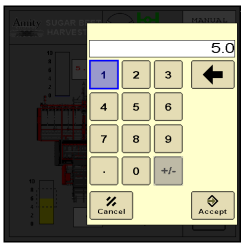

Figure 13-30: Pop-Up Keypad

- End Row Sensitivity: To change the speed the hitch moves with an End Row, adjust the End Row Sensitivity. The sensitivity can be set in the range from 1-10 in increments of 0.5. The higher the number the faster the hitch will move. To change the sensitivity, use the plus and minus buttons on the sides of the current setting. By directly selecting the setting number, a pop-up keypad will appear and a number can be typed in manually.

Figure 13-31: Target Depth Setting and Adjustment

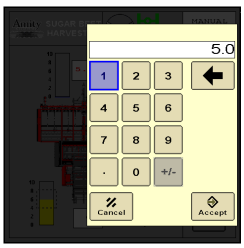

Figure 13-32: Pop-Up Keypad

- ***Sound Notifications:*** If your VT is compatible with sound, there is the option of having the screen beep when entering and exiting Auto state. When entering Auto state, the screen will produce one long beep. When exiting Auto state, the screen will produce two shorter beeps. While on the settings screen, a softkey will appear that allows you to turn the sound on or off. The softkey itself will change in appearance to signify if the sound is on or off.

Figure 13-33: Sound On Softkey

Page 2:

- ***PTO Override Sensor:*** For diagnostic purposes the PTO sensor can be overridden so the harvester can enter Auto without spinning the PTO. To override the PTO press on the toggle switch and the switch will turn green. Green means the override is enabled, red is disabled. You will always want this disable when harvesting.

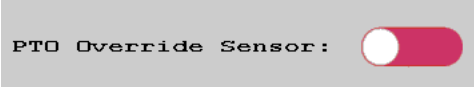

Figure 13-34: PTO Override (Red—Disabled)

- ***MAX Axle Installed:*** Model year 2026 and newer 2720 harvesters will have an rear axle that can move the full cylinder stroke while harvestings. Previously the axle could only flex to have a differential of 4 inches and was limited to that within the software. With the new axle, that limit can be removed. To remove that limit, select the toggle switch. It will then ask for you to enter the serial number of the machine to verify it has the new axle. After entering in a valid serial number the toggle will turn green and the rear axle will have full range. A red toggle means the 4 inch differential is active.

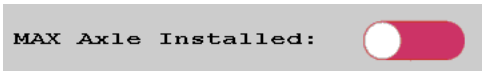

Figure 13-35: Max Axle Installed Toggle (Red—Off)

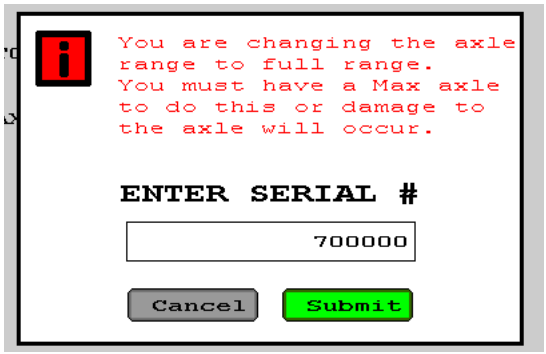

Figure 13-36: Serial number input

IMPORTANT!

IF THE HARVESTER DOES NOT HAVE A MAX AXLE DO NOT REMOVE THE AXLE LIMIT. KEEP THE TOGGLE RED OR DAMAGE TO THE AXLE WILL OCCUR.

A max axle looks physically different from the old axle. For a non-steering max axle, it is made from a larger round tube that spans the whole axle with another tube around it on the left hand side of the machine. For both a non-steering and a steering axle the side plates are made from one thick plate instead of two thinner plate welded together, and have a ball joint on the pivot pins. See Figures 13-37 & 13-38

Important! If your axle doesn't look like either of these do not remove the limit

Figure 13-37: This is what a non-steering MAX axle looks like.

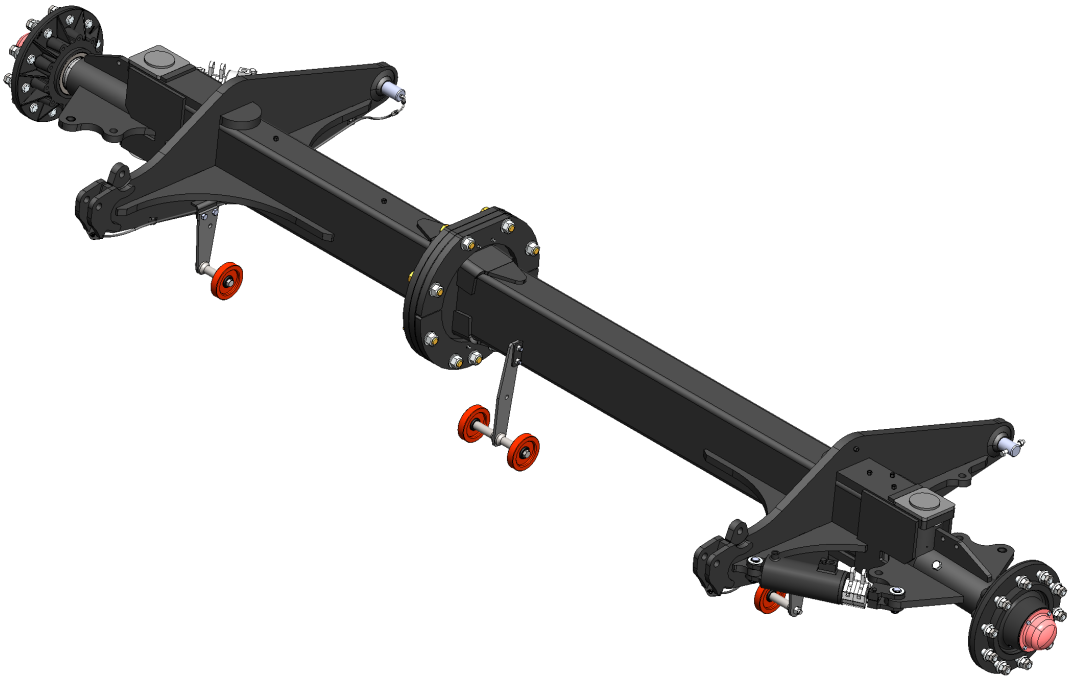

Figure 13-38: This is what a steering MAX axle looks like.

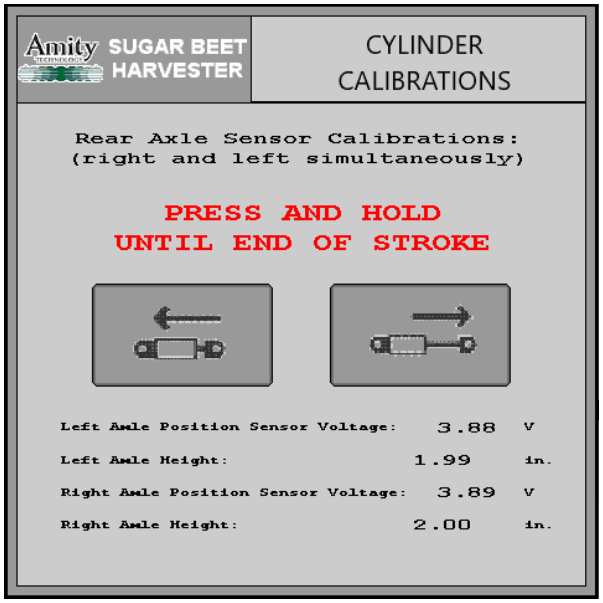

Figure 13-39: Cylinder Calibration Page

13.7 Rear Cylinder Calibration

Figure 13-39 shows the cylinder calibration page to calibration the sensors embedded inside the rear cylinders for the axle. To get to this page use the cylinder calibration softkey (Figure 13-40) that can only be found when on the Settings page.

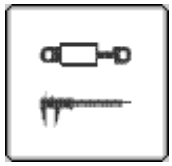

Figure 13-40: Cylinder Calibration Softkey

Important– During this calibration the machine will move up and down. Be sure all bystanders and objects are clear of the machine before proceeding. Hydraulic oil will need to be supplied to the ADC valve.

To calibrate, **PRESS AND HOLD** the retract cylinder icon and it will send oil to retract the cylinders. Both cylinder sensors will be calibrated at once. Once the cylinders have reached full retraction, release the icon on the screen and it will calibrate the sensors to know that it is at 0 inches. Then press and hold the extend icon to full extend the cylinders to calibrate the sensors to know where 10 inches is. The calibration is complete.

Tip, you can watch the voltage of the sensors and when they stop changing you have reached the end of the cylinder's stroke. We suggest holding for 5 more seconds after the voltage stops changing for good measure.

This cylinder calibration needs to be performed on initial set up and anytime a part or software is changed.

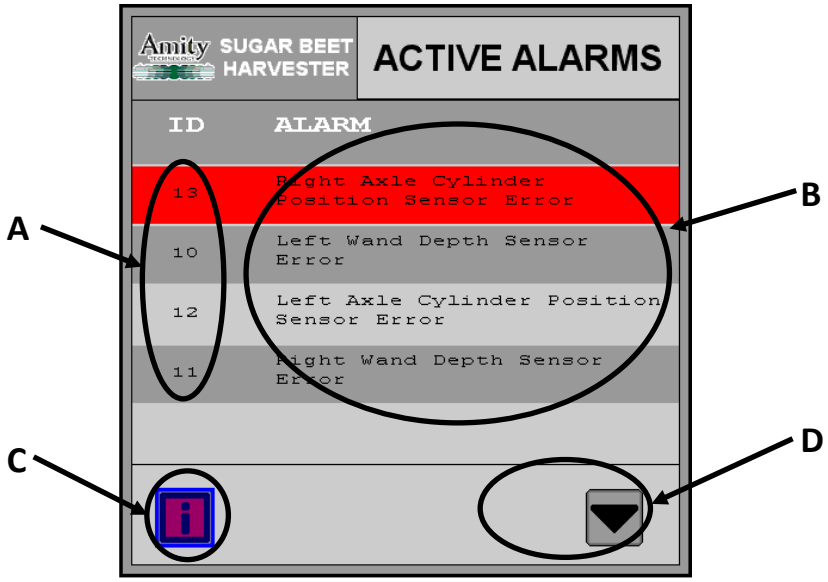

Figure 13-41: Active Alarms Page

13.8 Active Alarms Page

Figure 13-41 shows the Active Alarms page. This page displays a list of any currently active alarms within the system. Auto state cannot be entered while any alarms are active. This page can be accessed using the alarm page softkey from any other page (Figure 13-42). Below are descriptions of

- **A—*Alarm ID:*** Each possible alarm has a specific alarm ID that allows for easy lookup in the next few

- **B—*Alarm Title:*** The alarm title is the name given to the alarm.

- **C—*Information Icon:*** By selecting the information icon, more information on the highlighted alarm is displayed. This pop-up gives a brief description of the alarm and possible causes. Figure 13-43 is an

Figure 13-42: Alarm Page Softkey

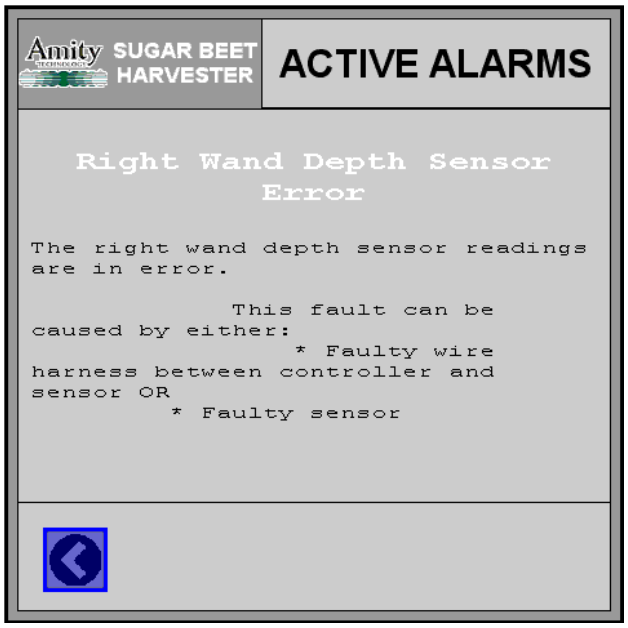

Figure 13-43: Alarm Information Pop-Up

- **D—*Scrolling Arrows:*** The scrolling arrows allow you to scroll through the alarms list (Figure 13-41). The alarm highlighted in red is the alarm that will be selected for more information.

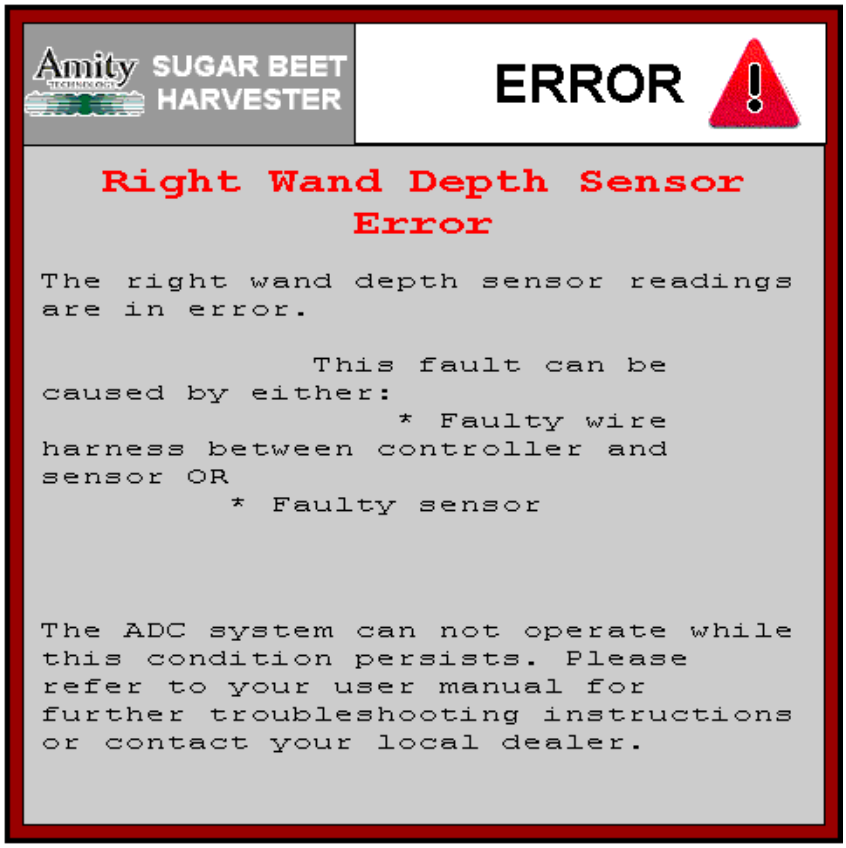

Figure 13-44: Error Pop-Up

When an alarm is initially triggered, an error pop-up message (Figure 13-44) will appear and remain until it is acknowledged. Figure 13-45 is the softkey used to acknowledge the error. The alarm will then be added to the alarms list page. Once the cause of the alarm is addressed, the alarm will be removed automatically.

Figure 13-45: Error Acknowledgement Softkey

13.9 Using ADC

Setup:

There are a few things that must be setup and two calibration that needs to happen before starting to harvest.

☐ ***Wand Calibration***— Before harvesting, the front wands need to be calibrated so that the system knows where the "zero" depth is. To calibrate the wands, use the hitch to lift the front of the harvester up into the air so that the wands are off the ground and are against their stops. Then, using the tractor's VT find the calibration softkey and select it. Once selected, the softkey will change to a green check mark for three seconds to signify that the calibration was successful. The calibration is now complete. It is good practice to calibrate the wands every time the system is restarted or if there is ever any wand reading displayed on the main page while the wands are up in the air.

☐ ***Cylinder Calibration***— On initial set up, a cylinder replacement, or software change the rear cylinder sensors need to be calibrated. To calibrate find the cylinder calibration softkey on the setting page and press and hold the cylinder extension and retraction icons until movement stops. See the calibration section for more details.

There are a few items that should be set up before harvesting.

☐ ***Target Depth***—Set an initial target depth for how deep you want the lifter wheels to go into the ground. After harvesting for a few yards, stop and measure the actual depth the machine is digging and adjust accordingly. This number can also be changed while harvesting if needed.

☐ ***Axle Setpoint***—Set the height of the rear axles. Typically, this number will be set to 2" in most applications. For muddier conditions or situations that require more cleaning, a higher setting can be used. Creating an incline in the cleaning bed of the harvester will cause the beets to remain in the cleaning bed for a longer period of time.

☐ ***Joystick Configuration and On/OFF***—If you want to use the joystick while harvesting, pick which joystick configuration you want to use from the settings page. The joystick will then have to be enabled before using the joystick toggle softkey. You can also use an ISOBUS joystick. See your tractor manual for details on how to set this up as it will vary based on tractor.

☐ ***Depth Sensitivity***—The depth sensitivity is how fast the system will react to depth reading given by the wands. We suggest setting the depth sensitivity on the setting page to 5 to start with and then adjusting to personal preferences or conditions while harvesting to reach a desired machine response.

☐ ***End Row Sensitivity***— This changes the speed that the hitch lifts on an End Row.

☐ ***End Raise On/Off***—The end raise function lifts the rear axles all the way up when End Row is entered. With the end raise function off, the axle will remain in place at the end of each pass.

☐ ***Max Axle On/Off***— This is the range the axle will work in. If you have a Max axle you can turn the limit off that a standard axle needs. **IF THE MACHINE DOESN'T HAVE A MAX AXLE DO NOT TURN THIS ON! IT WILL DAMAGE THE AXLE!**

Harvesting:

Once the system is calibrated, set up, and alarm free you are ready to harvest. To harvester follow these steps:

1. Ensure the machine is clear of any objects and any bystanders are at a safe distance.

2. Supply hydraulic oil to the ADC valve.

3. Engage PTO. The System Readiness Chart will turn into a **green** check mark indicating the system is ready to enter AUTO state.

4. Line the harvester up with the rows and press Auto and the harvester will lower the lifter wheels into the ground and start automatically adjusting the hitch height and the rear axle to maintain the targeted depth and level the machine. The current mode box with change to **green** and read “AUTO”.

5. Use the “HOLD” function to temporarily pause the automatic adjustments if needed.

6. At the end of the row, select END ROW using the screen or joystick to lift the machine out of the ground. The Current Mode Box will change to **blue** and read “END ROW”

13.10 Alarm Information

The following is a list with descriptions of the possible errors for the system.

Alarm ID Number	Title	Info	Possible Solution
1	Hitch Solenoid Over-current Fault	Too high an output current is detected on the controller output driving the hitch solenoid. Fault can be caused by: • Faulty wire harness between controller and solenoid OR faulty solenoid	-Check wiring harness, harness connectors, and solenoid for damage. Replace any damaged parts.
2	Left Axle Solenoid Overcurrent Fault	Too high an output current is detected on the controller output driving the left axle solenoid. Fault can be caused by: • Faulty wire harness between controller and solenoid OR faulty solenoid	-Check wiring harness, harness connectors, and solenoid for damage. Replace any damaged parts.
3	Right Axle Solenoid Overcurrent Fault	Too high an output current is detected on the controller output driving the right axle solenoid. Fault can be caused by: • Faulty wire harness between controller and solenoid OR faulty solenoid	-Check wiring harness, harness connectors, and solenoid for damage. Replace any damaged parts.
4	Hitch Solenoid Open Fault	Too low an output current is detected on the controller output driving the hitch solenoid. Fault can be caused by: • Faulty wire harness between controller and solenoid OR faulty solenoid	-Check wiring harness, harness connectors, and solenoid for damage. Replace any damaged parts.
5	Left Axle Solenoid Open Fault	Too low an output current is detected on the controller output driving the left axle solenoid. Fault can be caused by: • Faulty wire harness between controller and solenoid OR faulty solenoid	-Check wiring harness, harness connectors, and solenoid for damage. Replace any damaged parts.
6	Hitch Movement Timeout Fault	Hitch fails to move a defined distance within the defined time. Fault can be caused by: • Obstructed hitch OR faulty solenoid	-Check wiring harness, harness connectors, and solenoid for damage. Replace any damaged parts. -Check for any Obstructions. -Check for oil pressure or leaks.

7	Right Axle Solenoid Open Fault	Too low an output current is detected on the controller output driving the right axle solenoid. Fault can be caused by: • Faulty wire harness between controller	-Check wiring harness, harness connectors, and solenoid for damage. Replace any damaged parts.
8	Hitch Movement Timeout Fault	Hitch fails to move the a defined distance within the defined time. Fault can be caused by: • Obstructed hitch OR faulty solenoid	-Check wiring harness, harness connectors, and solenoid for damage. Replace any damaged parts. -Check for any Obstructions. -Check for oil pressure or leaks.
9	Left Axle Movement Timeout Fault	Left axle fails to move a defined distance within the defined time. Fault can be caused by: • Obstructed axle OR faulty solenoid	-Check wiring harness, harness connectors, and solenoid for damage. Replace any damaged parts. -Check for any Obstructions. -Check for oil pressure or leaks.
10	Right Axle Movement Timeout Fault	Right axle fails to move a defined distance within the defined time. Fault can be caused by: • Obstructed axle OR faulty solenoid	-Check wiring harness, harness connectors, and solenoid for damage. Replace any damaged parts. -Check for any Obstructions. -Check for oil pressure or leaks.
11	Left Wand Depth Sensor Error	Invalid voltage is detected on the left height sensor. Fault can be caused by: • Faulty wire harness between controller and sensor • Faulty sensor OR faulty controller	-Check wiring harness, harness connectors, wand sensor, and controller for damage. Replace any damaged parts.
12	Right Wand Depth Sensor Error	Invalid voltage is detected on the right height sensor. Fault can be caused by: • Faulty wire harness between controller and sensor • Faulty sensor OR faulty controller	-Check wiring harness, harness connectors, wand sensor, and controller for damage. Replace any damaged parts.
13	Left Axle Cylinder Position Sensor Error	Invalid voltage is detected on the left axle cylinder position sensor. Fault can be caused by: • Faulty wire harness between controller and sensor • Faulty sensor OR faulty controller	-Check wiring harness, harness connectors, wand sensor, and controller for damage. Replace any damaged parts.

14	Right Axle Cylinder Position Sensor Error	Invalid voltage is detected on the right axle cylinder position sensor. Fault can be caused by: • Faulty wire harness between controller and sensor	-Check wiring harness, harness connectors, wand sensor, and controller for damage. Replace any damaged parts.
15	Wand Depth Discrepancy Condition	Right and/or left wand depth sensor readings are outside the acceptable target depth range.	-Check wands for mechanical problems or damage. -Check for oil flow and leaks.
16	Axle Cylinder Setpoint Exceeded Condition	Right and/or left axle cylinder readings are outside the acceptable setpoint range.	-Check for oil flow and leaks.
17	Axle Cylinder Position Differential Discrepancy Condition	Difference between right and left axle cylinder readings is outside the acceptable range.	-Check for cylinder damage. -Check for oil flow and leaks.

14.0 Appendices

14.1 Conversions

1 acre = 0.404 hectares	1 mph = 1.609 kph
1 acre = 43,560 square feet	1 mile = 1.609 km
1 inch = 2.54 cm	1 psi = 6.895 kPa
1 foot = 0.3048 m	1 GPM = 3.785 LPM
1 lb = 0.45359 kg	1 hp = 0.746 kw
1 lb = 16 oz	1 ft-lb = 1.356 N·m

14.2 Trantorque Installation Procedures

Shaft and bore diameters along with surface finishes are critical for the proper installation of a Trantorque bushing. These specifications are followed at the factory during manufacturing. If it is necessary to disassemble and reassemble a Trantorque application that is undamaged and intact the following procedures will ensure a positive installation. If it is necessary to replace a unit in which the Trantorque or shaft may have come loose, rotated, or been damaged, a thorough inspection of the components is necessary to ensure that failure will not reoccur.

CAUTION: Do not use lubricants in this installation. The use of any lubricant on the contact surfaces may result in bushing failure and will void all warranties.

1. Both the shaft and component bore must be completely free of paint, grease, oil, dirt, and burrs. Clean the surfaces with a non-petroleum-based solvent, such as isopropyl alcohol.
2. Insert the Trantorque into the bore, making sure that the mating hub is flush against the shoulder at the hex flats.
3. Insert the shaft fully and hand-tighten the nut until the assembly becomes snug on the shaft.

IMPORTANT: The shaft must fully engage the gripping area of the Trantorque.

4. Using a torque wrench, tighten the nut to the proper torque shown in Table 14-1.

IMPORTANT: A torque wrench must be used! An impact wrench will not yield the proper torque and the installation will fail. Minimal under-tightening will allow the Trantorque or shaft to spin in the bore.

Over-tightening will damage or crack the Trantorque. Do not use an impact wrench during installation.

Table 14-1: Trantorque Installation Torque

Part #	Description	Torque
58459, 64163	Hub-Trantorque 1.75 in.	270 ft-lb (366 N·m)
58460, 64165	Hub-Trantorque 2.00 in.	470 ft-lb (637 N·m)
59259	Hub-Trantorque 2.25 in.	510 ft-lb (691 N·m)

14.3 Belted Chain Splice Procedure

All belted chains on the harvester use a 3 pitch lap style splice joint. To complete the splice:

1. Loop chain through and use a chain or strap to hold the ends of the belts so the 3 splice pitches over lap. Make sure the belt is oriented correctly for the direction of travel and for which side of the rods the belting lays.
2. Place the pared side , or side with the rubber removed down to the fabric, on top of the other belt.
3. Lay the splice rods, which will have drilled and tapped holes, on the belt side that matches the rest of the belting.
4. From the opposite side of the 2 belts as the rod, run the splice bolts through the splice plate, through the 2 belts, and into the thread rod. Recommend loosing installing all rods, plates, and bolts before tightening all the way.
5. For belts with 3 or 4 belts with the additional belts connected with p-clips, the use of a lock nut will be used as the bolts will not go into a threaded hole.
6. Tighten all the bolts to bulge the rubber 1 to 2 mm as seen in Figure 14-1.
7. Cut/grind the excess threads off the end of the bolts that stick through the rod.

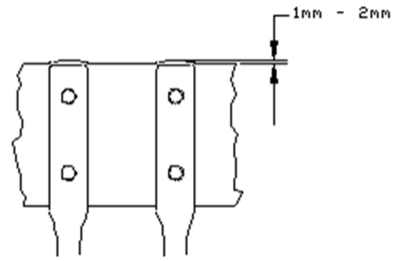

Figure 14-1: Belt Bulge

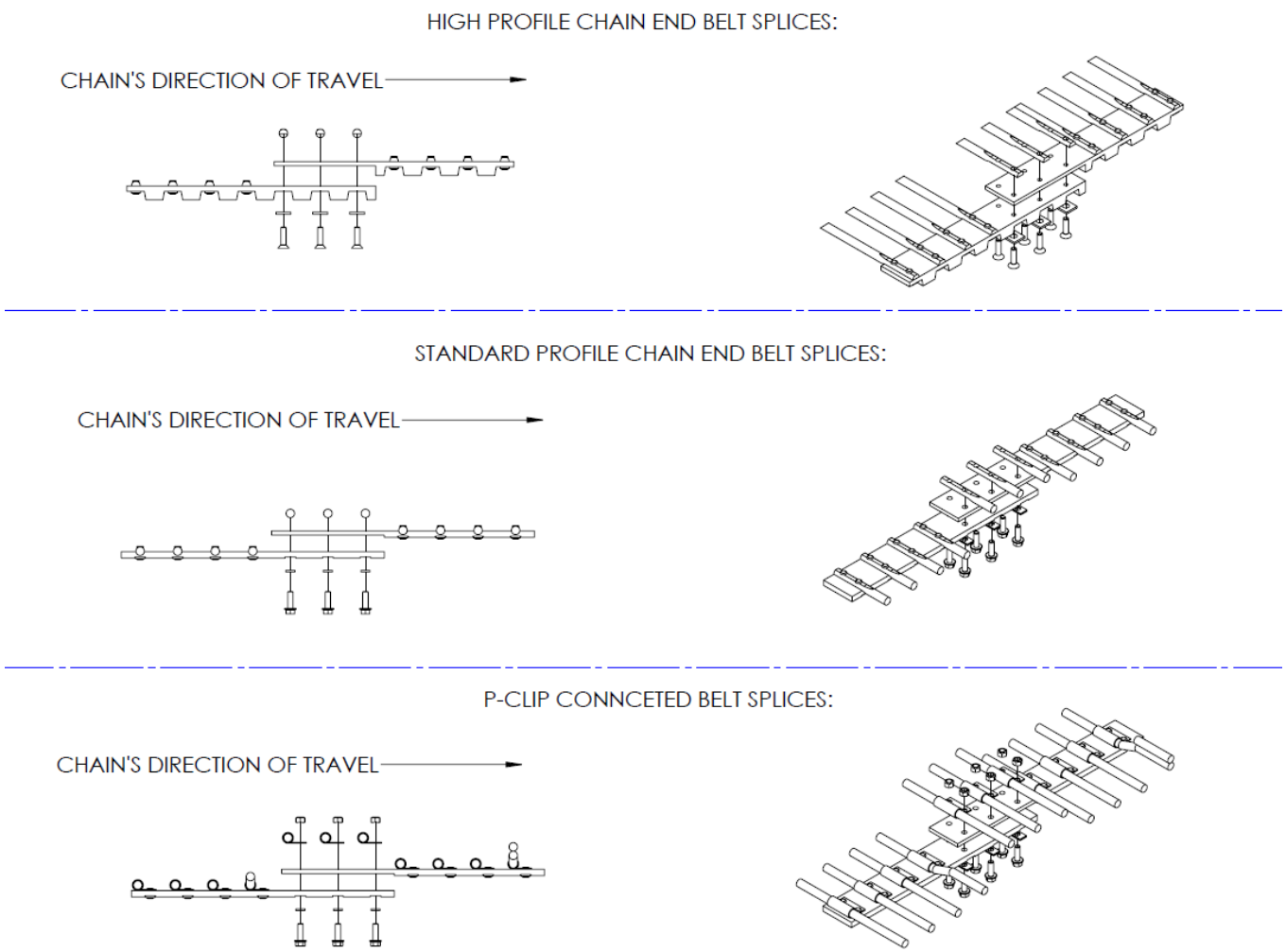

Figure 14-2: Belted Chain Lap Splices

14.4 Tools

Amity has the following tools available:

Trantorque sockets (#59107, 59108, 64820)

Trantorque wrench (#64320)

Belted chain link removal tool (#62802)

2-3/4 in wrenches (#72417, #72418)

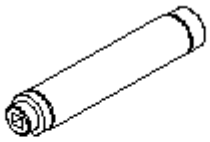

Part #	For Shaft Size	Nut Size
59107	1-3/4 in. (45 mm)	2-1/4 in. (57 mm)
59108	2 in. (51 mm)	2-1/2 in. (64 mm)
64820	2-1/4 in. (57 mm)	2-3/4 in. (70 mm)

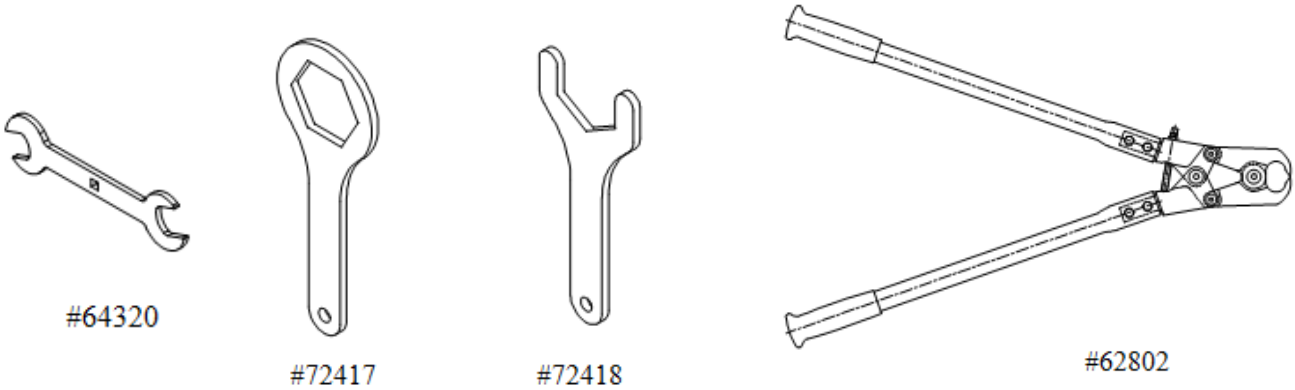

14.5 Tapered Hub/Sprocket Installation

MST bushings are easy to install and remove. They are split through the barrel and have a taper to provide a true clamp on the shaft. They are keyed to both the hub and the shaft to help during "blind" installations.

Installation:

1. Be sure the tapered cone surfaces of the bushing and the inside of the driven product are clean and free of anti-seize lubricants.
2. Place the bushing in the sprocket or other Martin MST part.
3. Place the cap screws loosely in the "pull up" holes. The bushing remains loose to ensure a sliding fit on the shaft.
4. With the key on the shaft, slide the sprocket to the desired position on shaft. Be sure the heads of the cap screws are accessible.

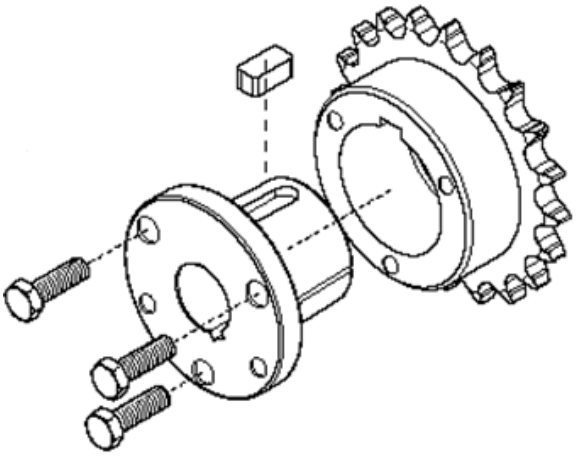

Figure 14-3: Bushing Installation

5. Align the sprocket and tighten the screws alternately and progressively until they are pulled up tight. (See Table 14-2.) Do not use extensions on wrench handles, and do not allow the sprocket to be drawn in contact with the flange of the bushing. There should be a gap between bushing flange and sprocket.

CAUTION: This gap must not be closed.

Removal:

1. Loosen and remove the capscrews.
2. Insert capscrews in the tapped removal holes.
3. Tighten the inserted screws until the sprocket is loose on the shaft.
4. Remove the sprocket from the shaft.

Table 14-2: Wrench Torque Values for Tightening Bushings

MST bushing size	Size of cap screw Inches	Wrench torque in-lbs (N·m)
H	¼ X ¾	95 (129)
P	5/16 X 1	192 (260)
Q	⅜ X 1 ¼	348 (472)
R	⅜ X 1 ¾	348 (472)
S	1/2 X 2 ¼	840 (1139)
U	⅝ X 2 ¾	1680 (2278)
W	¾ X 3	3000 (4068)

WARNING: Use of anti-seize lubricant on tapered cone surfaces or on bolt threads when mounting may result in damage to the sheaves and sprockets. This voids all manufacturers' warranties.

WARNING: Because of the possible danger to person(s) or property from accidents that may result from the improper use of products, it is important that correct procedures be followed. Products must be used in accordance with the engineering information specified in the catalog. Proper installation, maintenance, and operation procedures must be observed. The instructions given above must be followed. Inspections should be made as necessary to ensure safe operation under prevailing conditions. All rotating power transmission products when used in a drive are potentially dangerous and must be guarded by the user as required by applicable laws, regulations, standards, and good safety practice. (Refer to ANSI Standard B15.1.)

14.6 Torque Wrench Effective Length

To recalculate a torque reading when using a torque adapter, use the following formula, and refer to Figure 98:

$$TW = \frac{TA*L}{L + A}$$

TW is the torque setting or dial reading on the wrench.

TA is the torque specification (the actual amount of torque that should be applied to the fastener).

A is the amount that the adapter increases (or reduces) the effective lever length, as measured along the centerline of the torque wrench.

L is the lever length of the wrench as measured from the center of the drive to the center of the grip.

The effective length of the torque wrench, measured along the centerline of the torque wrench, is the sum of **L** and **A.**

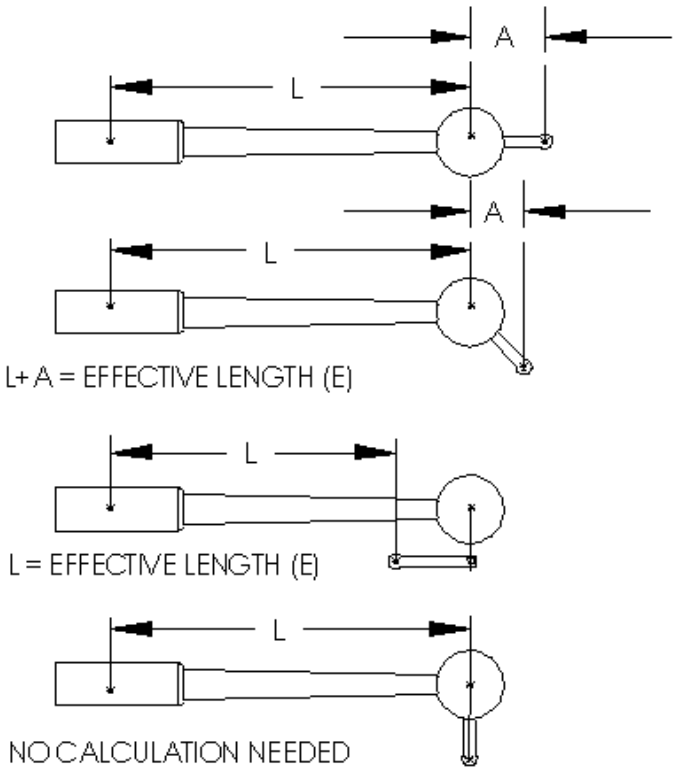

Figure 14-2: Torque Wrench Effective Length

14.7 Easy Lock Removal and Assembly

Removal:

1. Remove the EASY LOCK® tab with a screwdriver (Figure 14-3).
2. If the guard is chained, remove or hold back the chain to prevent it from blocking the bearing.
3. Turn the bearing in the direction as indicated in Figure 14-4. Then slide guard off the bearing.

Assembly:

1. Align the bearing tabs with the guard bell slots.
2. Slide the bell onto the bearing.
3. Turn the bearing to lock it in place.
4. Snap the EASY LOCK® tab into the bell.

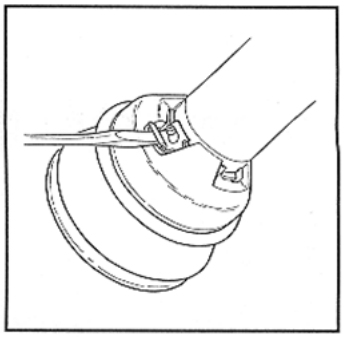

Figure 14-3: Remove Tab

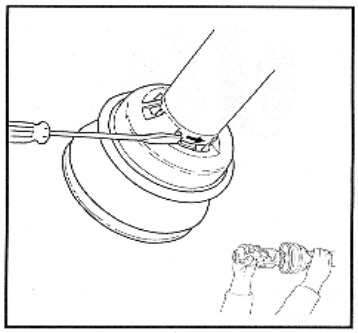

Figure 14-4: Turning Bearing

14.8 Torque Chart

Torque values listed are for coarse thread bolts, in general use only. Do not use these values if a different torque value or tightening procedure is listed for a specific application. Check the tightness of cap screws periodically.

Shear bolts are designed to fail under predetermined loads. Always replace shear bolts with the identical grade.

Fasteners should be replaced with the same or higher grade. If higher-grade fasteners are used, they should only be tightened to the strength of the original fastener.

Make sure fastener threads are clean and dry and thread engagement is properly started. This will prevent them from failing when tightened.

Tighten cap screws with a plastic insert or crimped steel-type lock nuts to approximately 50% of the torque shown in Table 14-3. Tighten toothed or serrated-type lock nuts to the full torque value.

Table 14-3: Torque Chart

Size (A)		Grade 5		Grade 8	
Standard	**Metric**	**N*m**	**lb-ft**	**N*m**	**lb-ft**
$^{1}/_{4}$"	.635 cm	12	9	17	12.5
$^{5}/_{16}$"	.794 cm	25	18	35	26
$^{3}/_{8}$"	.953 cm	44	33	63	46
$^{7}/_{16}$"	1.11 cm	70	52	100	75
$^{1}/_{2}$"	1.27 cm	110	80	150	115
$^{9}/_{16}$"	1.43 cm	155	115	225	160
$^{5}/_{8}$"	1.59 cm	215	160	300	225
$^{3}/_{4}$"	1.91 cm	375	280	550	400
$^{7}/_{8}$"	2.22 cm	625	450	875	650
1"	2.54 cm	925	675	1300	975
1 $^{1}/_{8}$"	2.86 cm	1150	850	1850	1350
1 $^{1}/_{4}$"	3.18 cm	1650	1200	2600	1950
1 $^{3}/_{8}$"	3.49 cm	2150	1550	3400	2550
1 $^{1}/_{2}$"	3.81 cm	2850	2100	4550	3350

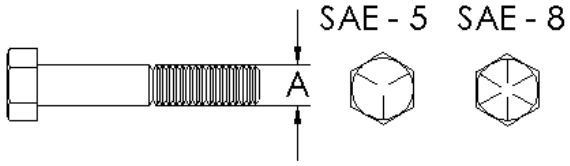

Figure 14-5: Bolt Grade Identification